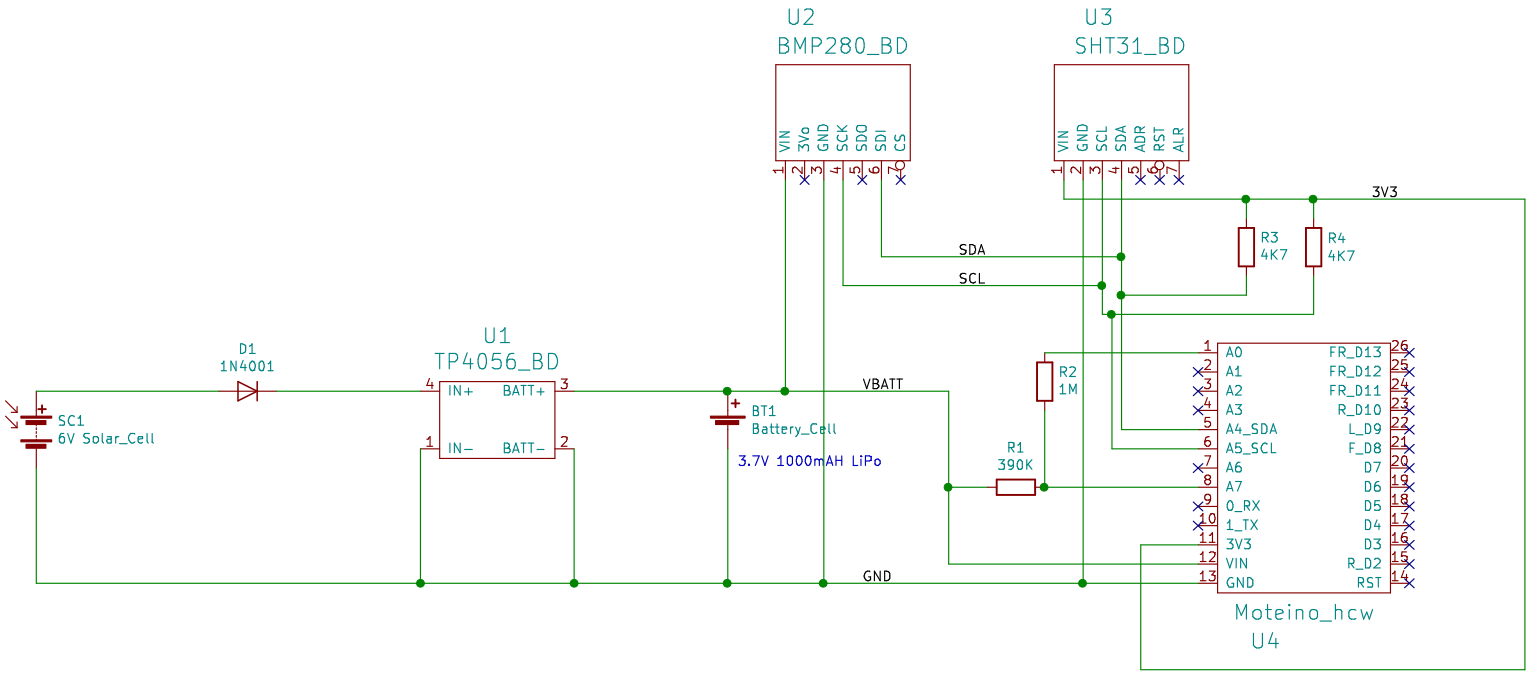

Sheet: /
File: weatherino.sch

Title: WEATHERINO – A – Temperature/Humidity/Pressure

Size: A4	Date: 17 Feb 2019	Rev: 1
KiCad E.D.A. kicad 5.0.2+dfsg1-1		Id: 1/1