POLICY DOCUMENT: ESCALATION PROCEDURES

Organization: NexaLink Telecommunications
Department: Customer Operations
Document ID: OPS-POL-2025-03
Version: 1.0
Effective Date: 10/2/2026

1.0 Objective

To establish a structured process for handling complex inquiries, technical failures, and emotional customer interactions. This policy ensures calls are routed to the employee with the appropriate authority and skill set to resolve the issue efficiently, minimizing customer frustration and operational risk.

2.0 Mandatory Escalation Triggers

Agents are authorized and required to initiate an escalation when any of the following conditions are met.

2.1 Customer-Driven Triggers

- **Explicit Request:** The customer asks to speak with a "Supervisor," "Manager," or "Someone in charge."
- **Negative Sentiment:** The customer's tone is detected as "Angry" or "Frustrated" for more than **2 consecutive minutes** despite de-escalation attempts.
- **Retention Threat:** The customer explicitly states an intention to cancel service or switch providers.

2.2 Operational & Policy Triggers

- **High-Value Billing Disputes:** Disputes exceeding **$200.00** or involving immediate service disconnection.
- **Repeat Contact:** The customer indicates this is their **3rd call (or more)** regarding the same unresolved issue.
- **Compliance Violation:** An agent realizes a compliance error occurred earlier in the call (e.g., failure to verify ID) and cannot rectify it without assistance.

2.3 Technical Triggers

- **Infrastructure Failure:** Issues identified as network outages, tower failures, or physical fiber cuts.
- **Hardware Failure:** Equipment issues that require replacement authorization beyond Tier 1 limits.

2.4 Risk & Legal Triggers

- **Legal Threats:** Customer mentions lawsuits, lawyers, or regulatory bodies (e.g., FCC, PUC, Consumer Protection).
- **Safety/Harassment:** Customer uses abusive language, makes personal threats against the agent, or exhibits sexually harassing behavior.

3.0 Escalation Tiers & Responsibilities

Issues must be escalated to the appropriate level based on complexity and authority required.

Tier 1: Customer Service Agent (Frontline)

- **Scope:** General inquiries, basic troubleshooting (modem reboot, settings check), billing questions <$200, plan changes.
- **Action:** Attempt resolution first. If triggers in Section 2.0 are met, escalate.

Tier 2: Senior Support / Technical Specialist

Scope: Complex technical configurations (port forwarding, static IP), confirmed outages, Moderate billing disputes ($200–$500), hardware replacement authorization.

- **Role:** The primary destination for technical escalations.

Tier 3: Team Lead / Retention Specialist

- **Scope:** Account cancellations (Retention), chronic repeat callers (3+ calls), complex credits/adjustments, resolving "Angry/Frustrated" sentiment escalations.
- **Role:** The primary destination for behavioral and retention escalations.

Tier 4: Operations Manager

- **Scope:** Legal/Regulatory threats, VIP/High-Profile accounts, social media viral threats, critical wide-area outages, harassment cases.
- **Role:** Final point of authority.

4.0 De-escalation Protocols

Before initiating a transfer, agents must attempt to de-escalate the situation (unless safety is at risk).

The "A.C.E.S." Framework

1. Acknowledge: Validate the customer's reality — "I hear you, and I understand why you feel this way."
2. Clarify: Confirm you have the full picture before acting — "Let me make sure I understand your concern correctly..."
3. Empathize: Share the emotional burden — "If I were in your situation, I would feel the same way."
4. Solve: Pivot immediately to action — "Here is what I can do for you right now."

Do not jump to Solve before completing Acknowledge and Clarify. Skipping steps is a common cause of re-escalation.

4.2 Approved De-escalation Phrases

- "I can hear how frustrated you are, and I want to help you fix this."
- "You have every right to be upset about this service delay."
- "Let’s work together to get your internet back up and running."

4.3 Forbidden Phrases (Do NOT Use)

- "Calm down." (Never use this).
- "There is nothing I can do."
- "It’s company policy."
- "I don't know." (Instead use: "Let me find that out for you.")

5.0 The Escalation Process

When escalation is necessary, follow this strict protocol.

5.1 Transfer Protocol

- **Standard: Warm Transfer:**
    - Place customer on brief hold (max 2 minutes).
    - Dial the Escalation Tier (2, 3, or 4).
    - Brief the receiving party on the issue and customer sentiment.
    - Connect the customer and introduce the new party.
- **Exception: Cold Transfer:**

    - Permitted *only* if the queue for the next tier exceeds 5 minutes or during high-volume outage events declared by Management.

5.2 Scripting

- **Agent to Customer:** *"I have exhausted my resources here, but I'd like to connect you with a specialist who can better assist you with this specific issue."*

5.3 Documentation Requirements

Before transferring, the Case Note must include:

1. **Summary:** What is the problem?
2. **Steps Taken:** What did you try?
3. **Sentiment:** Is the customer calm, irate, or threatening?
4. **Reason:** Why are you escalating?

5.4 Callback Service Level Agreement (SLA)

If the target Tier is unavailable, a callback ticket must be created.

- **High Priority (Outage/Supervisor Request):** Callback within **2 business hours**.
- **Medium Priority (Complex Tech/Billing):** Callback within **4 business hours**.
- **Low Priority (General Complaints / Standard Inquiries):** Callback within **8 business hours**.

6.0 Decision Flowcharts

Flowchart A: The Behavioral Escalation

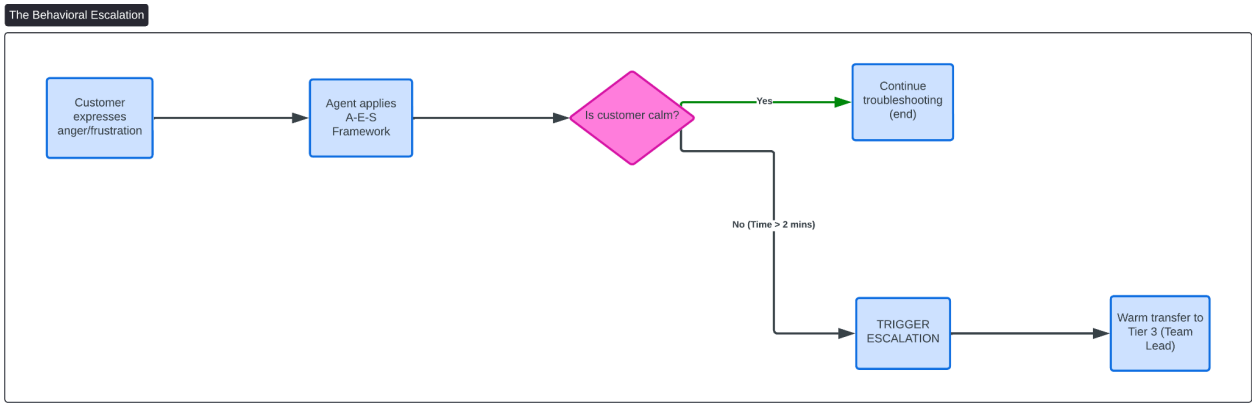

Flowchart B: The Technical Escalation

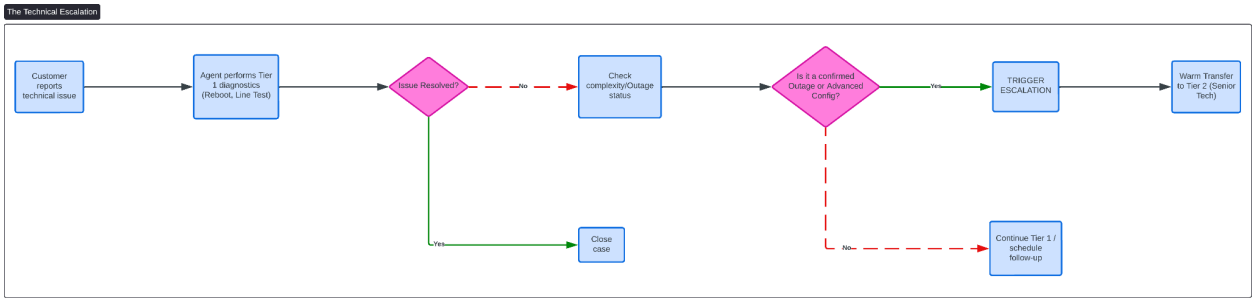

APPENDIX A: Quick Reference Decision Table

Scenario	Primary Action	Target Tier
Simple Billing Question (<$200)	Resolve on line	Tier 1
Billing Dispute >$200	Document & Transfer	Tier 2
"I want to cancel my service"	Acknowledge & Transfer	Tier 3 (Retention)
"Let me speak to your manager!"	De-escalate 1x, then Transfer	Tier 3 (Team Lead)
Abusive/Harassing Language	Warn 1x, then Transfer/Disconnect	Tier 3 or 4
Legal Threat / Regulatory Complaint	Do not argue; Transfer immediately	Tier 4 (Manager)
Repeated Call (3rd time same issue)	Apologize & Transfer	Tier 3 (Team Lead)
Confirmed Fiber Cut / Tower Down	Inform Customer & File Ticket	Tier 2 (for tracking)

Approved by: Director of Customer Operations
Date: 7/2/2026