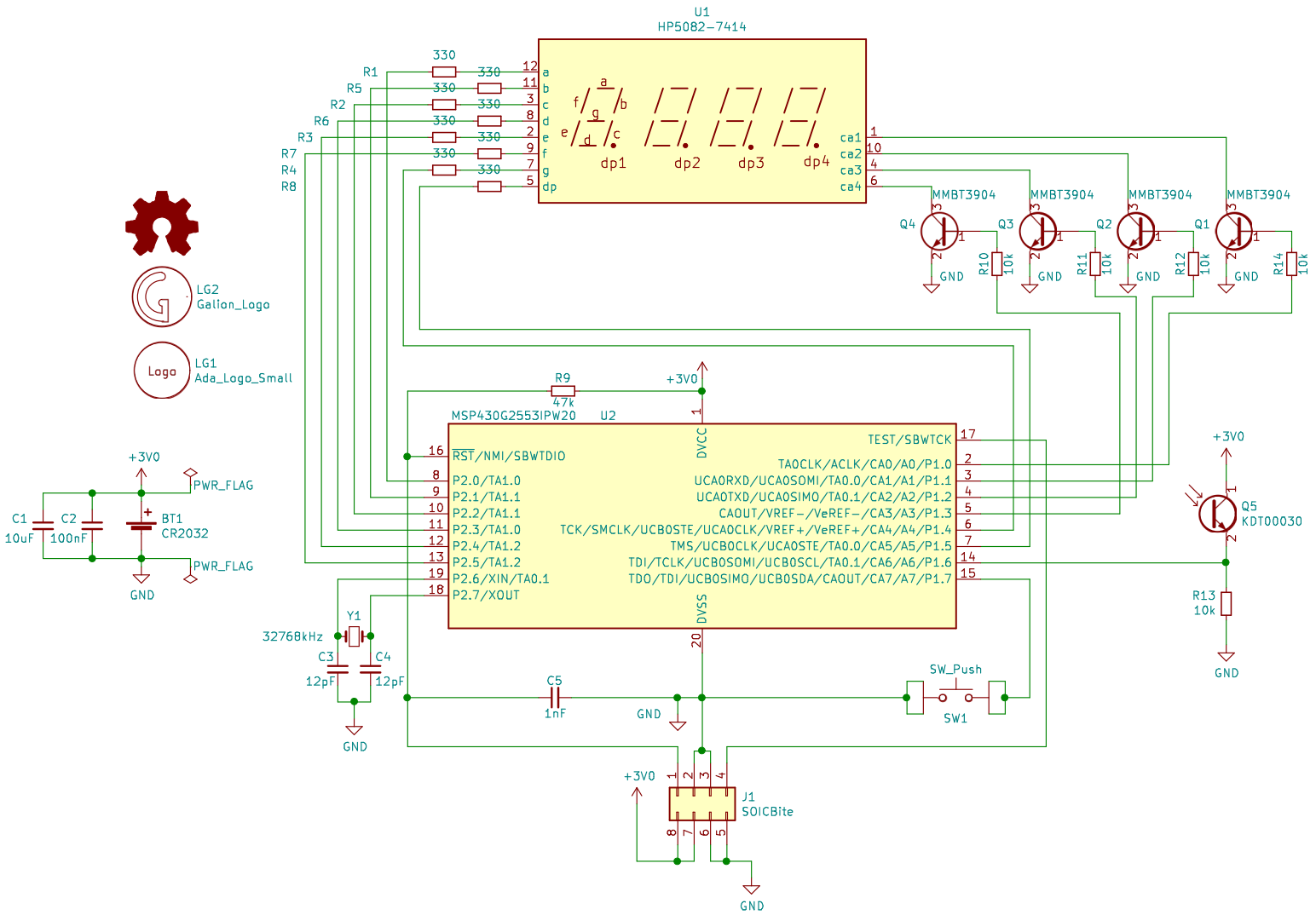


**Galion**

Sheet: /

File: ada-watch.sch

**Title: Ada-powereded digital watch**

| | | |
|---|---|---|
| Size: A4 | Date: 2019-10-04 | **Rev: 1** |
| KiCad E.D.A. eeschema 5.99.0-unknown-r17001-43768b71 | | Id: 1/1 |