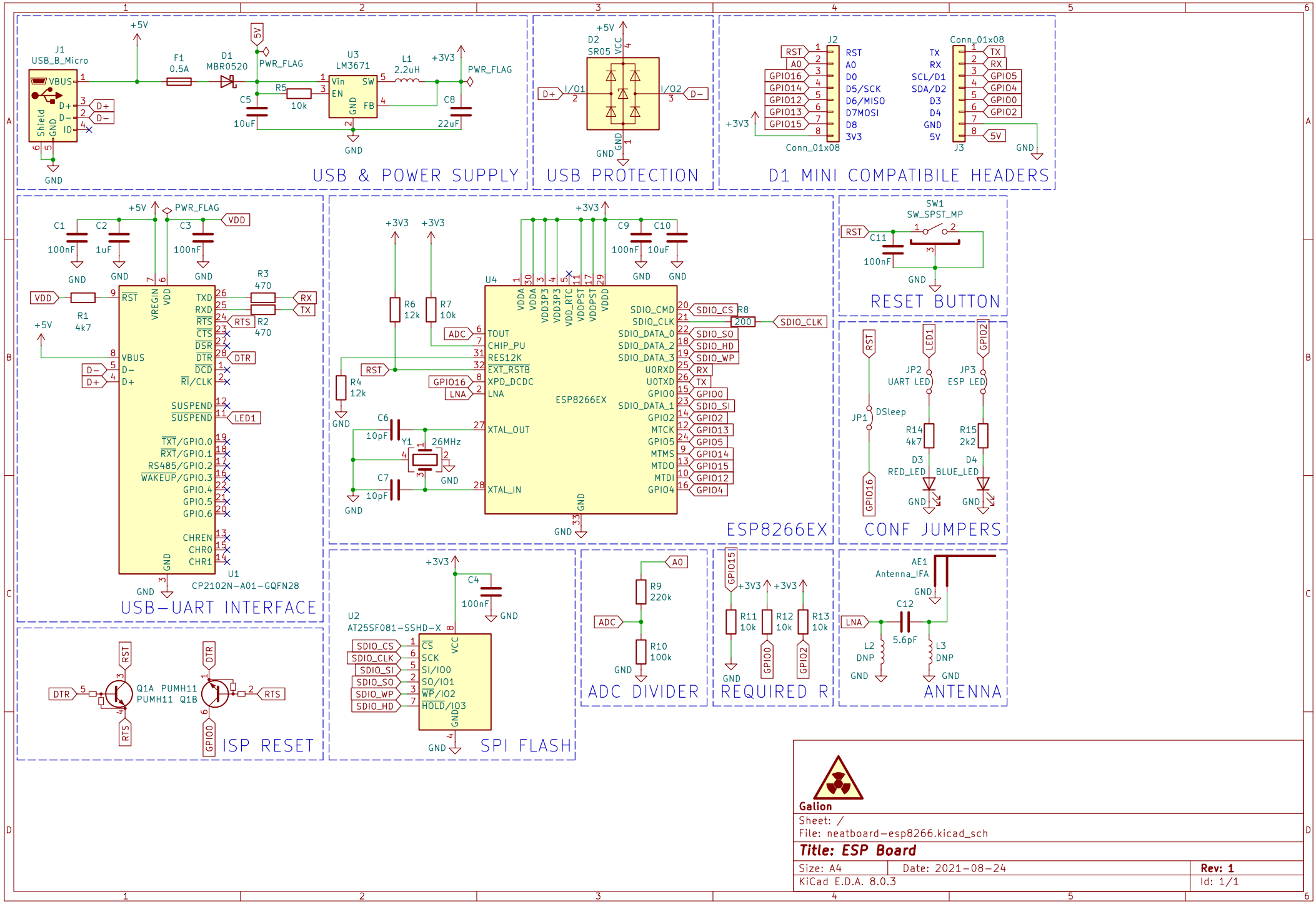
USB & POWER SUPPLY
J1
USB_B_Micro
VBUS
D+
D−
ID
GND
Shield
+5V
F1
0.5A
D1
MBR0520
5V
PWR_FLAG
U3
LM3671
Vin
EN
SW
FB
R5
10k
C5
10uF
L1
2.2uH
+3V3
C8
22uF
USB PROTECTION
D2
SR05
VCC
I/O1
I/O2
D+
D−
D1 MINI COMPATIBILE HEADERS
J2
Conn_01x08
RST
A0
GPIO16
GPIO14
GPIO12
GPIO13
GPIO15
D0
D5/SCK
D6/MISO
D7MOSI
D8
3V3
TX
RX
SCL/D1
SDA/D2
D3
D4
GND
5V
J3
GPIO5
GPIO4
GPIO0
GPIO2
USB−UART INTERFACE
C1
100nF
C2
1uF
C3
VDD
R1
4k7
R3
470
R2
470
U1
CP2102N−A01−GQFN28
RST
VREGIN
VBUS
TXD
RXD
RTS
CTS
DSR
DTR
DCD
RI/CLK
SUSPEND
LED1
TXT/GPIO.0
RXT/GPIO.1
RS485/GPIO.2
WAKEUP/GPIO.3
GPIO.4
GPIO.5
GPIO.6
CHREN
CHR0
CHR1
ESP8266EX
U4
R6
12k
R7
10k
R4
12k
C6
10pF
C7
10pF
Y1
26MHz
C9
100nF
C10
10uF
VDDA
VDD3P3
VDD_RTC
VDDPST
VDDD
TOUT
CHIP_PU
RES12K
EXT_RSTB
XPD_DCDC
LNA
XTAL_OUT
XTAL_IN
SDIO_CMD
SDIO_CLK
SDIO_DATA_0
SDIO_DATA_2
SDIO_DATA_3
U0RXD
U0TXD
GPIO0
SDIO_DATA_1
GPIO2
MTCK
GPIO5
MTMS
MTDO
MTDI
GPIO4
SDIO_CS
SDIO_SI
SDIO_SO
SDIO_HD
SDIO_WP
R8
200
RESET BUTTON
SW1
SW_SPST_MP
C11
100nF
CONF JUMPERS
JP1
DSleep
JP2
UART LED
JP3
ESP LED
R14
4k7
R15
2k2
D3
RED_LED
D4
BLUE_LED
ISP RESET
Q1A PUMH11
PUMH11 Q1B
SPI FLASH
U2
AT25SF081−SSHD−X
C4
100nF
CS
SCK
SI/IO0
SO/IO1
WP/IO2
HOLD/IO3
ADC DIVIDER
R9
220k
R10
100k
REQUIRED R
R11
10k
R12
10k
R13
10k
ANTENNA
AE1
Antenna_IFA
C12
5.6pF
L2
DNP
L3
DNP
Galion
Sheet: /
File: neatboard−esp8266.kicad_sch
Title: ESP Board
Size: A4
Date: 2021−08−24
Rev: 1
KiCad E.D.A. 8.0.3
Id: 1/1