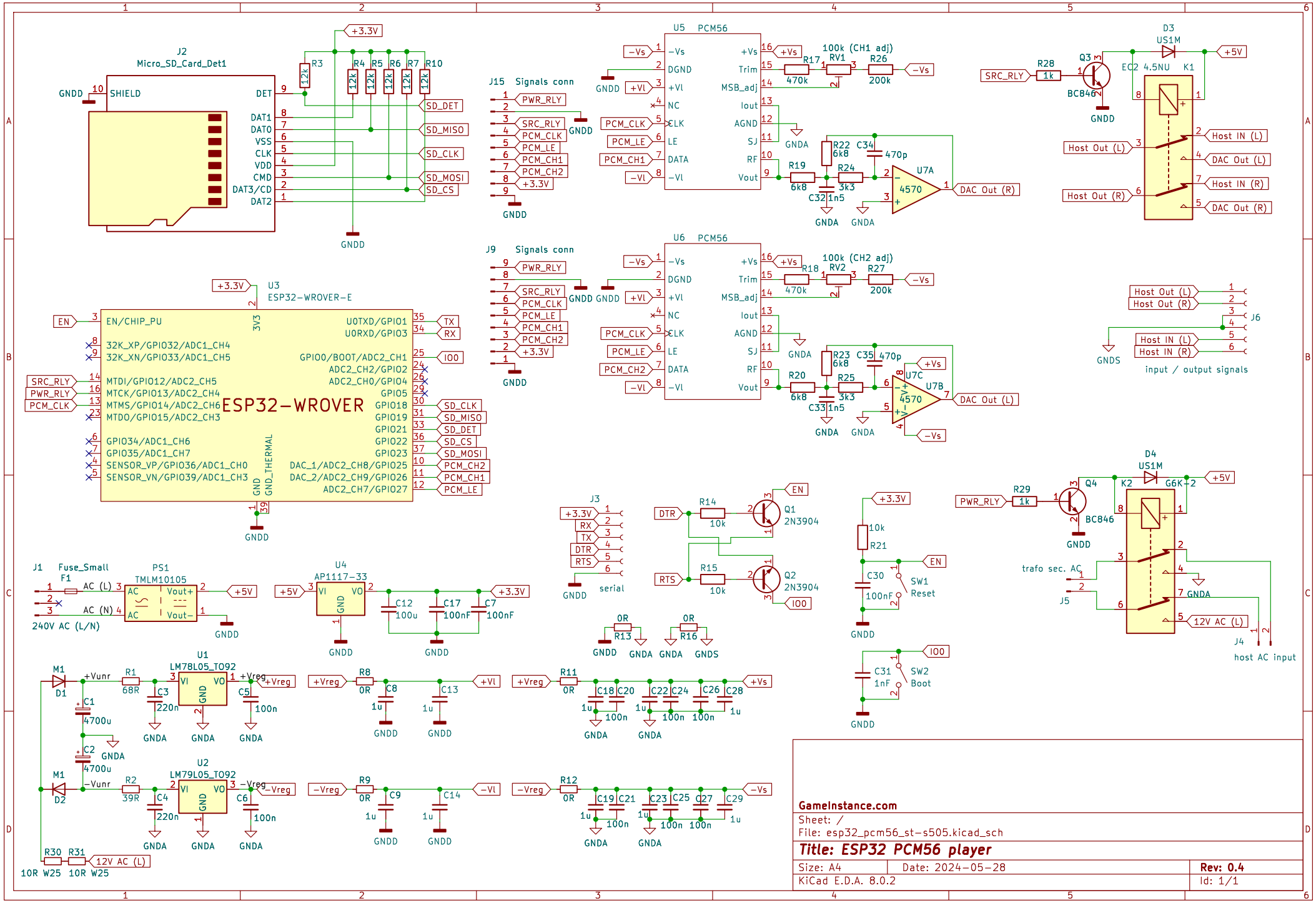
J2
Micro_SD_Card_Det1
SHIELD
DET
DAT1
DAT0
VSS
CLK
VDD
CMD
DAT3/CD
DAT2
SD_DET
SD_MISO
SD_CLK
SD_MOSI
SD_CS
GNDD
+3.3V
R3 12k
R4 12k
R5 12k
R6 12k
R7 12k
R10 12k
J15 Signals conn
PWR_RLY
SRC_RLY
PCM_CLK
PCM_LE
PCM_CH1
PCM_CH2
+3.3V
U5 PCM56
−Vs
DGND
+Vl
NC
CLK
LE
DATA
−Vl
+Vs
Trim
MSB_adj
Iout
AGND
SJ
RF
Vout
100k (CH1 adj)
RV1
R17 470k
R26 200k
R22 6k8
C34 470p
R19 6k8
R24 3k3
C32 1n5
U7A
4570
DAC Out (R)
GNDA
D3
US1M
+5V
R28 1k
Q3
BC846
EC2 4.5NU
K1
Host Out (L)
Host Out (R)
Host IN (L)
DAC Out (L)
Host IN (R)
DAC Out (R)
J9 Signals conn
U6 PCM56
100k (CH2 adj)
RV2
R18 470k
R27 200k
R23 6k8
C35 470p
R20 6k8
R25 3k3
C33 1n5
U7C
U7B
DAC Out (L)
J6
GNDS
input / output signals
U3
ESP32-WROVER-E
EN/CHIP_PU
32K_XP/GPIO32/ADC1_CH4
32K_XN/GPIO33/ADC1_CH5
MTDI/GPIO12/ADC2_CH5
MTCK/GPIO13/ADC2_CH4
MTMS/GPIO14/ADC2_CH6
MTDO/GPIO15/ADC2_CH3
GPIO34/ADC1_CH6
GPIO35/ADC1_CH7
SENSOR_VP/GPIO36/ADC1_CH0
SENSOR_VN/GPIO39/ADC1_CH3
U0TXD/GPIO1
U0RXD/GPIO3
GPIO0/BOOT/ADC2_CH1
ADC2_CH2/GPIO2
ADC2_CH0/GPIO4
GPIO5
GPIO18
GPIO19
GPIO21
GPIO22
GPIO23
DAC_1/ADC2_CH8/GPIO25
DAC_2/ADC2_CH9/GPIO26
ADC2_CH7/GPIO27
3V3
GND
GND_THERMAL
ESP32-WROVER
TX
RX
IO0
SRC_RLY
PWR_RLY
PCM_CLK
J3
serial
DTR
RTS
R14 10k
R15 10k
Q1 2N3904
Q2 2N3904
EN
IO0
0R R13
0R R16
GNDS
R21 10k
C30 100nF
SW1 Reset
C31 1nF
SW2 Boot
D4
US1M
R29 1k
Q4
BC846
K2
G6K-2
trafo sec. AC
J5
12V AC (L)
J4
host AC input
J1
Fuse_Small
F1
PS1
TMLM10105
AC (L)
AC (N)
Vout+
Vout−
240V AC (L/N)
U4
AP1117-33
VI
VO
C12 100u
C17 100nF
C7 100nF
M1
D1
+Vunr
R1 68R
C3 220n
C1 4700u
C2 4700u
U1
LM78L05_TO92
+Vreg
C5 100n
R8 0R
C8 1u
C13 1u
+Vl
R11 0R
C18 C20 C22 C24 C26 C28
+Vs
D2
−Vunr
R2 39R
C4 220n
U2
LM79L05_TO92
−Vreg
C6 100n
R9 0R
C9 1u
C14 1u
−Vl
R12 0R
C19 C21 C23 C25 C27 C29
−Vs
R30 10R W25
R31 10R W25
12V AC (L)
GameInstance.com
Sheet: /
File: esp32_pcm56_st-s505.kicad_sch
Title: ESP32 PCM56 player
Size: A4
Date: 2024-05-28
Rev: 0.4
KiCad E.D.A. 8.0.2
Id: 1/1