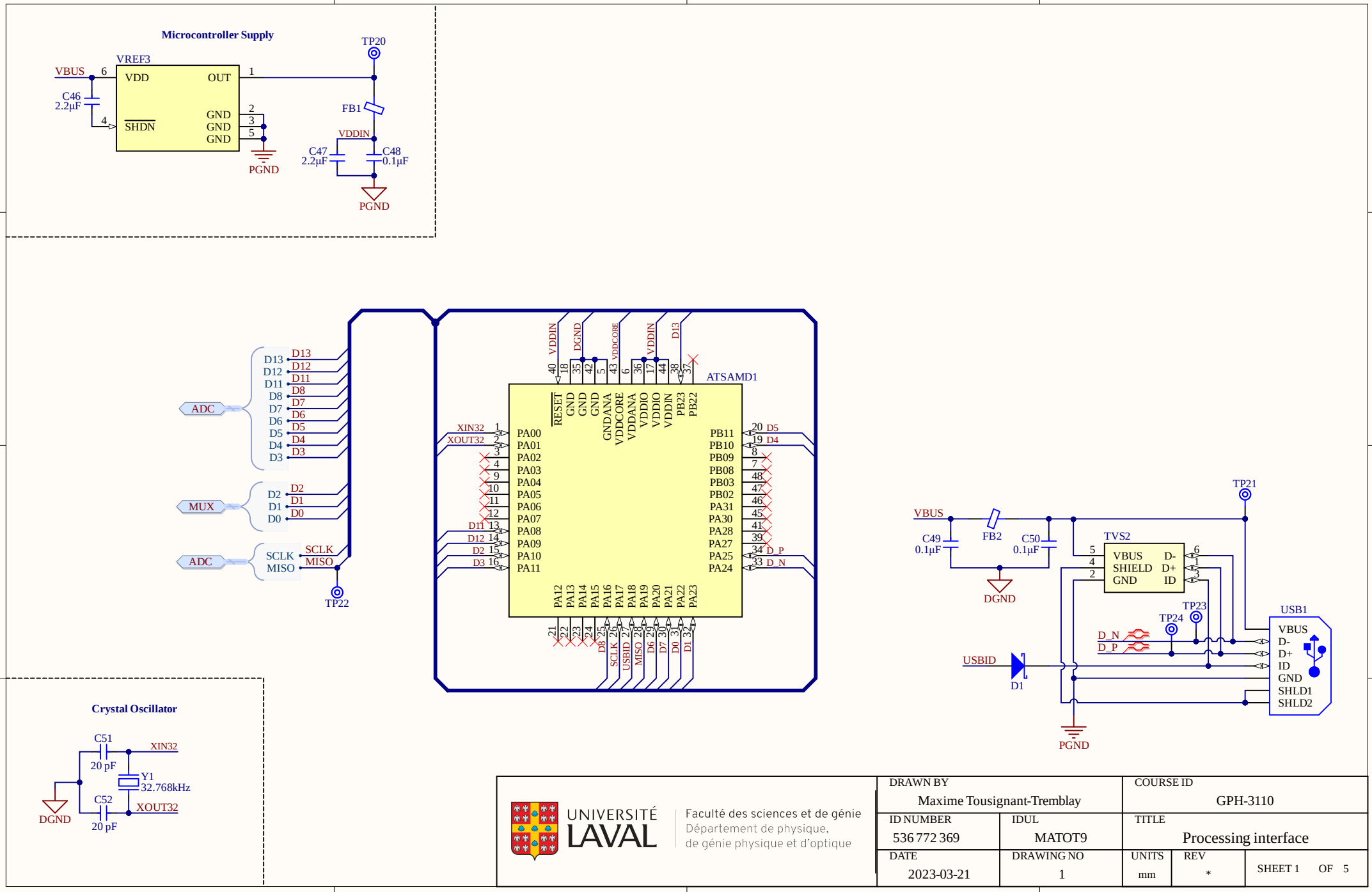
Microcontroller Supply
VREF3
VDD
OUT
SHDN
GND
GND
GND
VBUS
C46
2.2µF
TP20
FB1
VDDIN
C47
2.2µF
C48
0.1µF
PGND
ATSAMD1
RESET
GND
GND
GND
GNDANA
VDDCORE
VDDANA
VDDIO
VDDIO
VDDIN
PB23
PB22
PA00
PA01
PA02
PA03
PA04
PA05
PA06
PA07
PA08
PA09
PA10
PA11
PB11
PB10
PB09
PB08
PB03
PB02
PA31
PA30
PA28
PA27
PA25
PA24
PA12
PA13
PA14
PA15
PA16
PA17
PA18
PA19
PA20
PA21
PA22
PA23
XIN32
XOUT32
D11
D12
D2
D3
D5
D4
D_P
D_N
D8
SCLK
USBID
MISO
D6
D7
D0
D1
ADC
MUX
ADC
SCLK
MISO
TP22
TP21
VBUS
C49
0.1µF
FB2
C50
0.1µF
TVS2
VBUS
SHIELD
GND
D-
D+
ID
DGND
TP23
TP24
USB1
VBUS
D-
D+
ID
GND
SHLD1
SHLD2
USBID
D1
PGND
Crystal Oscillator
C51
20 pF
XIN32
Y1
32.768kHz
C52
20 pF
XOUT32
DGND
UNIVERSITÉ LAVAL
Faculté des sciences et de génie
Département de physique,
de génie physique et d'optique
DRAWN BY
Maxime Tousignant-Tremblay
COURSE ID
GPH-3110
ID NUMBER
536 772 369
IDUL
MATOT9
TITLE
Processing interface
DATE
2023-03-21
DRAWING NO
1
UNITS
mm
REV
*
SHEET 1 OF 5