Omnidirectional Microphone with Bottom Port and Analog Output

GENERAL DESCRIPTION

The INMP401* is a high-quality, high-performance, low-power, analog-output bottom-ported omnidirectional MEMS microphone. The INMP401 consists of a MEMS microphone element, an impedance converter, and an output amplifier. The INMP401 sensitivity specification makes it an excellent choice for near-field applications. The INMP401 has a wideband frequency response, resulting in natural sound with high intelligibility. The specially designed low frequency cutoff reduces wind noise. Its low current consumption enables long battery life for portable applications.

The INMP401 complies with the TIA-920 *Telecommunications Telephone Terminal Equipment Transmission Requirements for Wideband Digital Wireline Telephones* standard.

The INMP401 is available in a 4.72 × 3.76 × 1.00 mm surface-mount package. It is reflow solder compatible with no sensitivity degradation. The INMP401 is halide free.

**Protected by U.S. Patents 7,449,356; 7,825,484; 7,885,423; and 7,961,897. Other patents are pending.*

APPLICATIONS

- Mobile Devices
- Teleconferencing Systems
- Headsets
- Security Panels
- Intercom Devices

FEATURES

- 4.72 × 3.76 × 1.00 mm Surface-Mount Package
- SNR of 62 dBA
- Sensitivity of −42 dBV
- Flat Frequency Response from 60 Hz to 15 kHz
- Low Current Consumption: <250 µA
- Single-Ended Analog Output
- High PSR of 70 dB
- Compatible with Sn/Pb and Pb-Free Solder Processes
- RoHS/WEEE Compliant

FUNCTIONAL BLOCK DIAGRAM

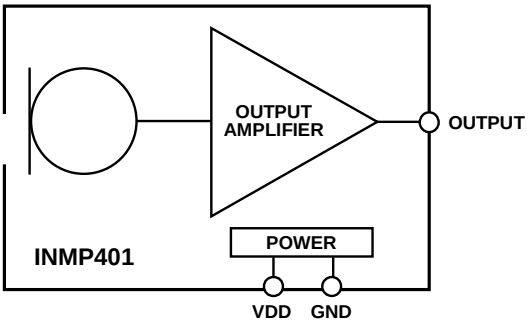

ORDERING INFORMATION

PART	TEMP RANGE
INMP401ACEZ-R0*	−40°C to +85°C
INMP401ACEZ-R7†	−40°C to +85°C
EV_INMP401	—
EV_INMP401-FX	—

* – 13” Tape and Reel

† – 7” Tape and reel to be discontinued. Contact sales@invensense.com for availability.

TABLE OF CONTENTS

General Description 1
Applications 1
Features 1
Functional Block Diagram 1
Ordering Information 1
Table of Contents 2
Specifications 3
Table 1. Electrical Characteristics 3
Absolute Maximum Ratings 4
Table 2. Absolute Maximum Ratings 4
ESD Caution 4
Soldering Profile 5
Table 3. Recommended Soldering Profile* 5
Pin Configurations And Function Descriptions 6
Table 4. Pin Function Descriptions 6
Typical Performance Characteristics 7
Applications Information 8
Connecting To Audio Codecs 8
Supporting Documents 9
Evaluation Board User Guide 9
Application Notes (Product Specific) 9
Application Notes (General) 9
PCB Design And Land Pattern Layout 10
Handling Instructions 11
Pick And Place Equipment 11
Reflow Solder 11
Board Wash 11
Outline Dimensions 12
Ordering Guide 13
Revision History 13
Compliance Declaration Disclaimer: 14
Environmental Declaration Disclaimer: 14

SPECIFICATIONS

TABLE 1. ELECTRICAL CHARACTERISTICS

(T_A = −40 to 85°C, V_{DD} = 1.5 to 3.3 V, unless otherwise noted. All minimum and maximum specifications are guaranteed across temperature and voltage, and are specified in Table 1, unless otherwise noted. Typical specifications are not guaranteed.)

PARAMETER	CONDITIONS	MIN	TYP	MAX	UNITS	NOTES
PERFORMANCE						
Directionality			Omni			
Sensitivity	1 kHz, 94 dB SPL	−45	−42	−39	dBV	
Signal-to-Noise Ratio (SNR)			62		dBA	
Equivalent Input Noise (EIN)			32		dBA SPL	
Dynamic Range	Derived from EIN and maximum acoustic input		88		dB	
Frequency Response	Low frequency −3 dB point		60		Hz	1
	High frequency −3 dB point		15		kHz	
Total Harmonic Distortion (THD)	105 dB SPL			3	%	
Power-Supply Rejection (PSR)	217 Hz, 100 mVp-p square wave superimposed on VDD = 1.8 V		−70		dBV	
Maximum Acoustic Input	Peak		120		dB SPL	
POWER SUPPLY						
Supply Voltage (V_{DD})		1.5		3.3	V	
Supply Current (I_S)				250	µA	
OUTPUT CHARACTERISTICS						
Output Impedance (Z_{OUT})			200		Ω	
Output DC Offset			0.8		V	
Output Current Limit			90		µA	

Note 1: See Figure 3 and Figure 4.

ABSOLUTE MAXIMUM RATINGS

Stress above those listed as Absolute Maximum Ratings may cause permanent damage to the device. These are stress ratings only and functional operation of the device at these conditions is not implied. Exposure to the absolute maximum ratings conditions for extended periods may affect device reliability.

TABLE 2. ABSOLUTE MAXIMUM RATINGS

PARAMETER	RATING
Supply Voltage (VDD)	−0.3 V to +3.6 V
Sound Pressure Level (SPL)	160 dB
Mechanical Shock	10,000 *g*
Vibration	Per MIL-STD-883 Method 2007, Test Condition B
Temperature Range	−40°C to +85°C

ESD CAUTION

ESD (electrostatic discharge) sensitive device. Charged devices and circuit boards can discharge without detection. Although this product features patented or proprietary protection circuitry, damage may occur on devices subjected to high energy ESD. Therefore proper ESD precautions should be taken to avoid performance degradation or loss of functionality.

SOLDERING PROFILE

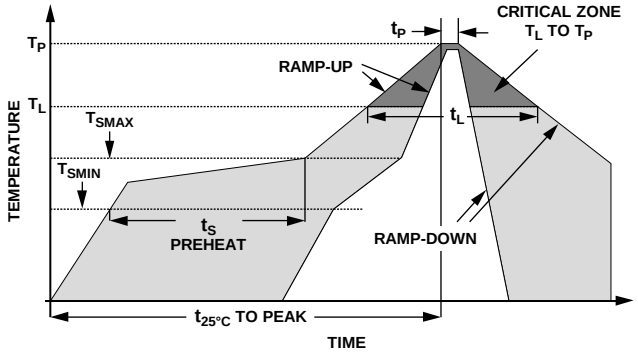

Figure 1. Recommended Soldering Profile Limits

TABLE 3. RECOMMENDED SOLDERING PROFILE*

PROFILE FEATURE		Sn63/Pb37	Pb-Free
Average Ramp Rate (T_L to T_P)		1.25°C/sec max	1.25°C/sec max
Preheat	Minimum Temperature (T_{SMIN})	100°C	100°C
	Minimum Temperature (T_{SMIN})	150°C	200°C
	Time (T_{SMIN} to T_{SMAX}), t_S	60 sec to 75 sec	60 sec to 75 sec
Ramp-Up Rate (T_{SMAX} to T_L)		1.25°C/sec	1.25°C/sec
Time Maintained Above Liquidous (t_L)		45 sec to 75 sec	~50 sec
Liquidous Temperature (T_L)		183°C	217°C
Peak Temperature (T_P)		215°C +3°C/−3°C	245°C +0°C/−5°C
Time Within +5°C of Actual Peak Temperature (t_P)		20 sec to 30 sec	20 sec to 30 sec
Ramp-Down Rate		3°C/sec max	3°C/sec max
Time +25°C ($t_{25°C}$) to Peak Temperature		5 min max	5 min max

Note: *The reflow profile in Table 3 is recommended for board manufacturing with InvenSense MEMS microphones. All microphones are also compatible with the J-STD-020 profile.

PIN CONFIGURATIONS AND FUNCTION DESCRIPTIONS

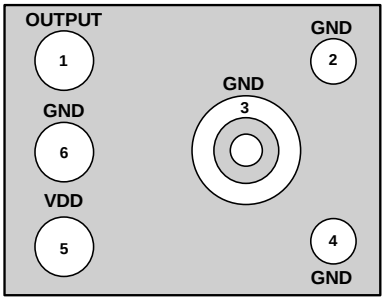

BOTTOM VIEW
Not to Scale

Figure 2. Pin Configuration

TABLE 4. PIN FUNCTION DESCRIPTIONS

PIN	NAME	FUNCTION
1	OUTPUT	Analog Output Signal
2	GND	Ground
3	GND	Ground
4	GND	Ground
5	VDD	Power Supply
6	GND	Ground

TYPICAL PERFORMANCE CHARACTERISTICS

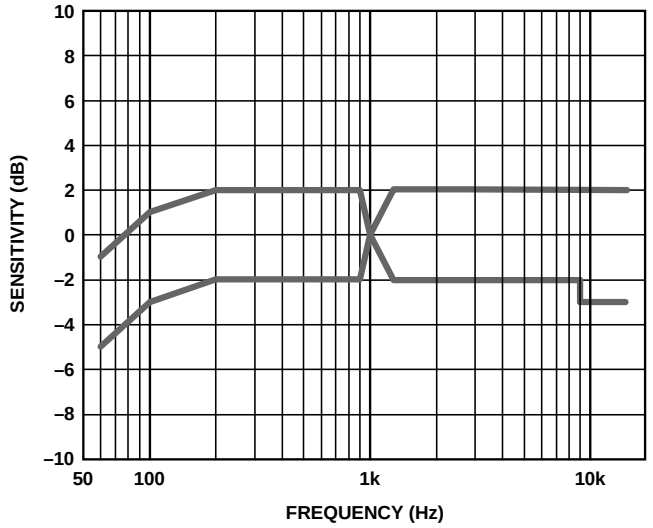

Figure 3. Frequency Response Mask

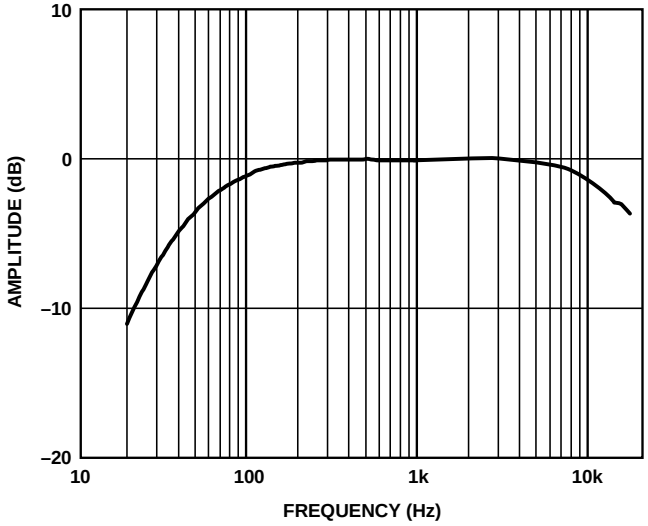

Figure 4. Typical Frequency Response (Measured)

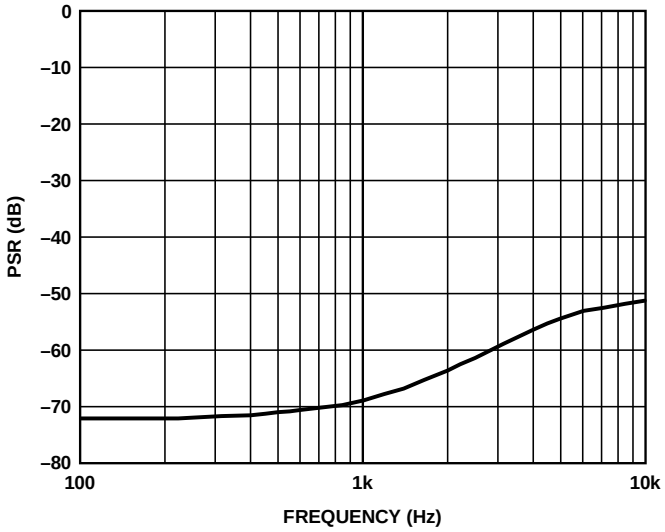

Figure 5. Typical Power Supply Rejection Ratio vs. Frequency

APPLICATIONS INFORMATION

CONNECTING TO AUDIO CODECS

The INMP401 output can be connected to a dedicated codec microphone input (see Figure 6) or to a high input impedance gain stage (see Figure 7.) A 0.1 µF ceramic capacitor placed close to the INMP401 supply pin is used for testing and is recommended to adequately decouple the microphone from noise on the power supply. A DC-blocking capacitor is required at the output of the microphone. This capacitor creates a high-pass filter with a corner frequency at

$$f_C = 1/(2\pi \times C \times R)$$

where *R* is the input impedance of the codec.

A minimum value of 2.2 µF is recommended in Figure 6 because the input impedance of codecs can be as low as 2 kΩ at its highest PGA gain setting, which results in a high-pass filter corner frequency at about 37 Hz. Figure 7 shows the INMP401 connected to an op amp configured as a non-inverting preamplifier.

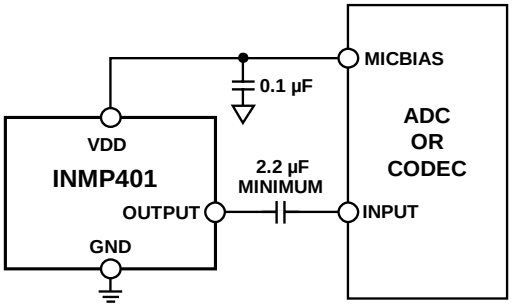

Figure 6. INMP401 Connected to a Codec

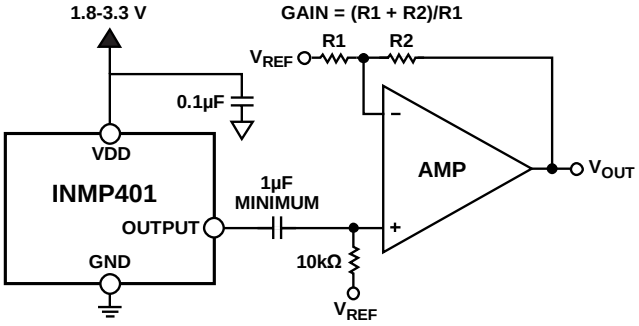

Figure 7. INMP401 Connected to an Op Amp

SUPPORTING DOCUMENTS

For additional information, see the following documents.

EVALUATION BOARD USER GUIDE

UG-445 Analog Output MEMS Microphone Flex Evaluation Board
UG-126 Analog Output MEMS Microphone Flex Evaluation Board

APPLICATION NOTES (PRODUCT SPECIFIC)

AN-0207 High Performance Analog MEMS Microphone's Simple Interface to SigmaDSP Audio Codec
AN-0262 Low Noise Analog MEMS Microphone and Preamp with Compression and Noise Gating

APPLICATION NOTES (GENERAL)

AN-1003 Recommendations for Mounting and Connecting the Invensense Bottom-Ported MEMS Microphones
AN-1068 Reflow Soldering of the MEMS Microphone
AN-1112 Microphone Specifications Explained
AN-1124 Recommendations for Sealing Invensense, Bottom-Port MEMS Microphones from Dust and Liquid Ingress
AN-1140 Microphone Array Beamforming
AN-1165 Op Amps for MEMS Microphone Preamp Circuits
AN-1181 Using a MEMS Microphone in a 2-Wire Microphone Circuit

PCB DESIGN AND LAND PATTERN LAYOUT

The recommended PCB land pattern for the INMP401 should be laid out to a 1:1 ratio to the solder pads on the microphone package, as shown in Figure 8. Take care to avoid applying solder paste to the sound hole in the PCB. A suggested solder paste stencil pattern layout is shown in Figure 9. The diameter of the sound hole in the PCB should be larger than the diameter of the sound port of the microphone. A minimum diameter of 0.5 mm is recommended.

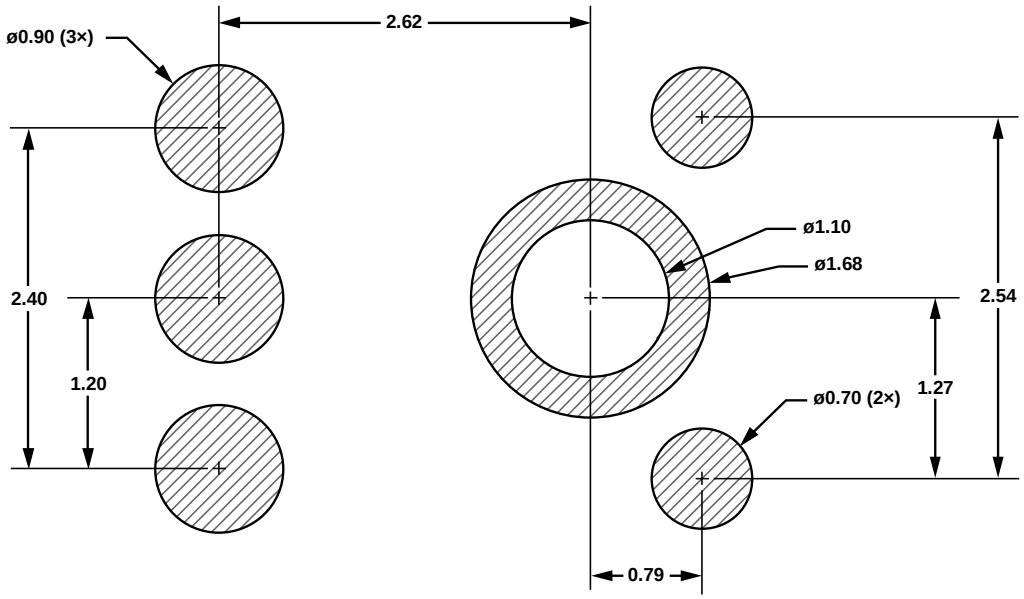

Figure 8. PCB Land Pattern Layout

Dimensions shown in millimeters

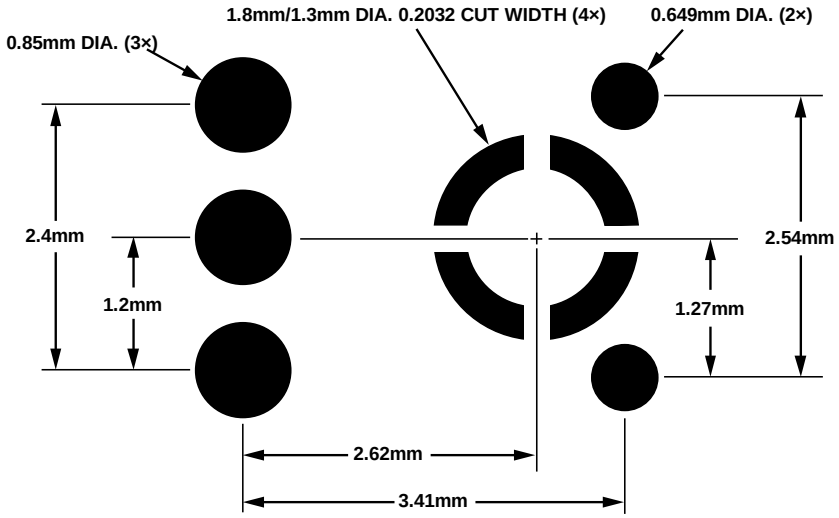

Figure 9. Suggested Solder Paste Stencil Pattern Layout

Dimensions shown in millimeters

HANDLING INSTRUCTIONS

PICK AND PLACE EQUIPMENT

The MEMS microphone can be handled using standard pick-and-place and chip shooting equipment. Take care to avoid damage to the MEMS microphone structure as follows:

- Use a standard pickup tool to handle the microphone. Because the microphone hole is on the bottom of the package, the pickup tool can make contact with any part of the lid surface.
- Do not pick up the microphone with a vacuum tool that makes contact with the bottom side of the microphone. Do not pull air out of or blow air into the microphone port.
- Do not use excessive force to place the microphone on the PCB.

REFLOW SOLDER

For best results, the soldering profile must be in accordance with the recommendations of the manufacturer of the solder paste used to attach the MEMS microphone to the PCB. It is recommended that the solder reflow profile not exceed the limit conditions specified in Figure 1 and Table 3.

BOARD WASH

When washing the PCB, ensure that water does not make contact with the microphone port. Do not use blow-off procedures or ultrasonic cleaning.

OUTLINE DIMENSIONS

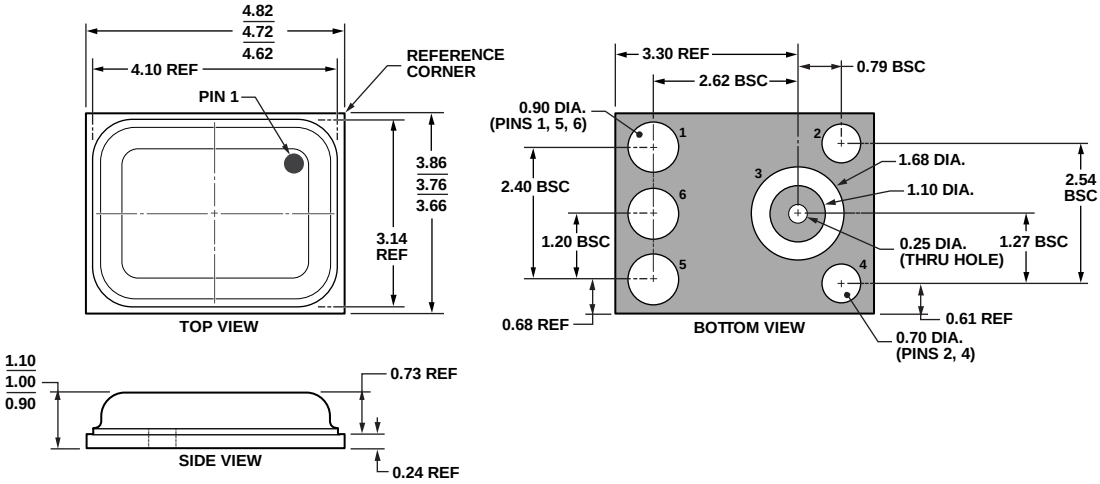

Figure 10. 3-Terminal Chip Array Small Outline No-Lead Cavity [LGA_CAV]
4.72 × 3.76 × 1.00 mm Body
Dimensions shown in millimeters

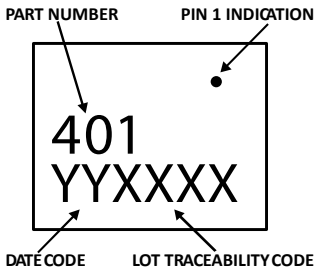

Figure 11. Package Marking Specification (Top View)

ORDERING GUIDE

PART	TEMP RANGE	PACKAGE	QUANTITY
INMP401ACEZ-R0[1]*	−40°C to +85°C	6-Terminal LGA_CAV	4,500
INMP401ACEZ-R7[1]†	−40°C to +85°C	6-Terminal LGA_CAV	1,000
EV_INMP401	—	Evaluation Board	—
EV_INMP401-FX	—	Flex Evaluation Board	—

* – 13” Tape and Reel
† – 7” Tape and reel to be discontinued. Check with sales@invensense.com for availability.
[1]Z = RoHS-Compliant Part

REVISION HISTORY

REVISION DATE	REVISION	DESCRIPTION
02/06/2014	1.0	Initial Release

Compliance Declaration Disclaimer:

InvenSense believes this compliance information to be correct but cannot guarantee accuracy or completeness. Conformity documents for the above component constitutes are on file. InvenSense subcontracts manufacturing and the information contained herein is based on data received from vendors and suppliers, which has not been validated by InvenSense.

Environmental Declaration Disclaimer:

InvenSense believes this environmental information to be correct but cannot guarantee accuracy or completeness. Conformity documents for the above component constitutes are on file. InvenSense subcontracts manufacturing and the information contained herein is based on data received from vendors and suppliers, which has not been validated by InvenSense.

This information furnished by InvenSense, Inc. is believed to be accurate and reliable. However, no responsibility is assumed by InvenSense for its use, or for any infringements of patents or other rights of third parties that may result from its use. Specifications are subject to change without notice. InvenSense reserves the right to make changes to this product, including its circuits and software, in order to improve its design and/or performance, without prior notice. InvenSense makes no warranties, neither expressed nor implied, regarding the information and specifications contained in this document. InvenSense assumes no responsibility for any claims or damages arising from information contained in this document, or from the use of products and services detailed therein. This includes, but is not limited to, claims or damages based on the infringement of patents, copyrights, mask work and/or other intellectual property rights.

Certain intellectual property owned by InvenSense and described in this document is patent protected. No license is granted by implication or otherwise under any patent or patent rights of InvenSense. This publication supersedes and replaces all information previously supplied. Trademarks that are registered trademarks are the property of their respective companies. InvenSense sensors should not be used or sold in the development, storage, production or utilization of any conventional or mass-destructive weapons or for any other weapons or life threatening applications, as well as in any other life critical applications such as medical equipment, transportation, aerospace and nuclear instruments, undersea equipment, power plant equipment, disaster prevention and crime prevention equipment.

©2014 InvenSense, Inc. All rights reserved. InvenSense, MotionTracking, MotionProcessing, MotionProcessor, MotionFusion, MotionApps, DMP, AAR, and the InvenSense logo are trademarks of InvenSense, Inc. Other company and product names may be trademarks of the respective companies with which they are associated.

InvenSense

©2014 InvenSense, Inc. All rights reserved.