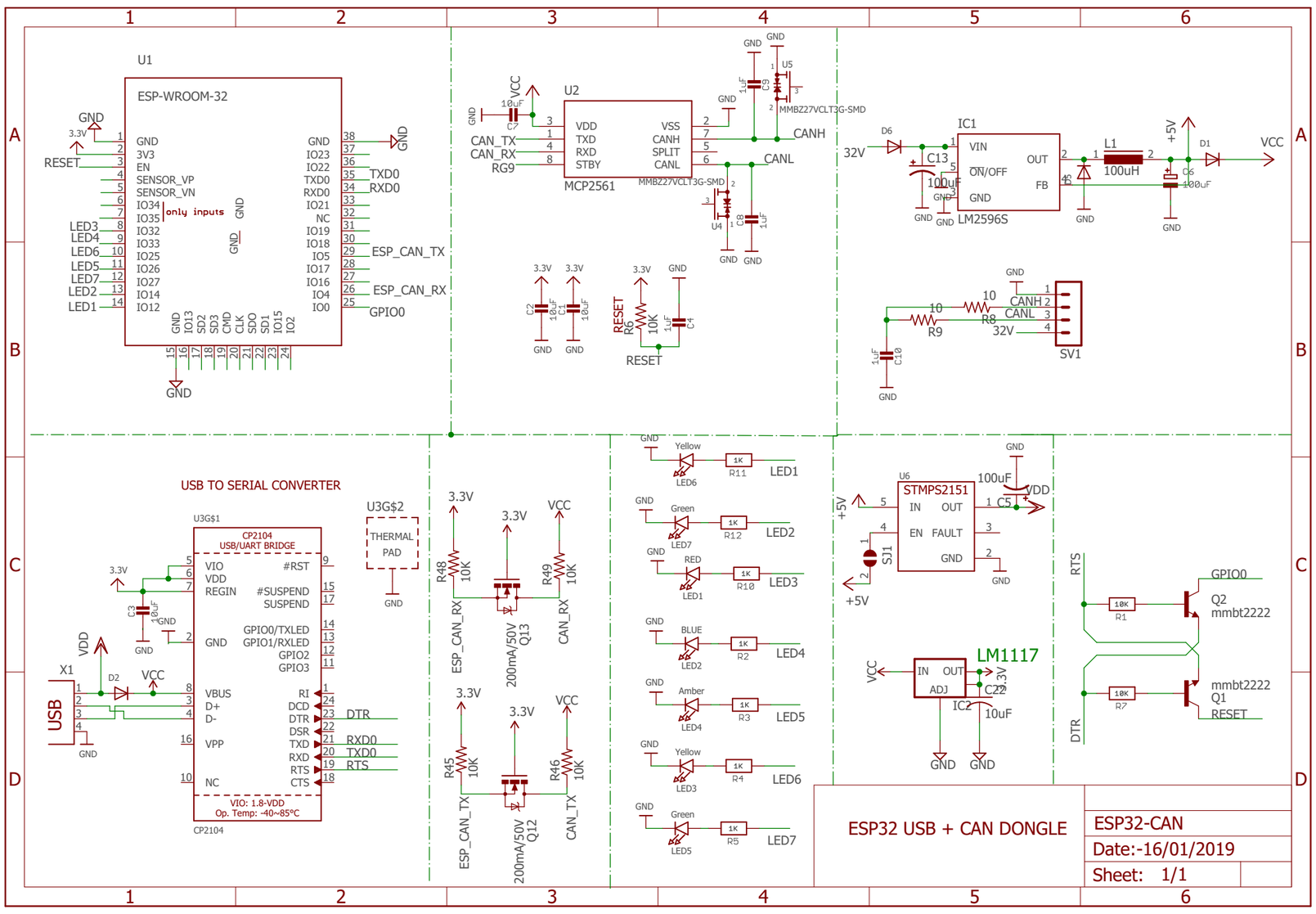
ESP-WROOM-32
U1
MCP2561
U2
LM2596S
IC1
STMPS2151
U6
LM1117
IC2
USB TO SERIAL CONVERTER
CP2104
USB/UART BRIDGE
U3G$1
U3G$2
THERMAL PAD
ESP32 USB + CAN DONGLE
ESP32-CAN
Date:-16/01/2019
Sheet: 1/1