# 25AA256/25LC256

## 256K SPI™ Bus Serial EEPROM

### Device Selection Table

| Part Number | Vcc Range | Page Size | Temp. Ranges | Packages |
|---|---|---|---|---|
| 25LC256 | 2.5-5.5V | 64 Byte | I, E | P, SN, ST, MF |
| 25AA256 | 1.8-5.5V | 64 Byte | I | P, SN, ST, MF |

### Features

- Max. clock 10 MHz
- Low-power CMOS technology
  - Max. Write Current: 5 mA at 5.5V, 10 MHz
  - Read Current: 5 mA at 5.5V, 10 MHz
  - Standby Current: 1 µA at 5.5V
- 32,768 x 8-bit organization
- 64 byte page
- Self-timed ERASE and WRITE cycles (5 ms max.)
- Block write protection
  - Protect none, 1/4, 1/2 or all of array
- Built-in write protection
  - Power-on/off data protection circuitry
  - Write enable latch
  - Write-protect pin
- Sequential read
- High reliability
  - Endurance: 1,000,000 erase/write cycles
  - Data retention: > 200 years
  - ESD protection: > 4000V
- Temperature ranges supported;
  - Industrial (I): -40°C to +85°C
  - Automotive (E): -40°C to +125°C
- Standard and Pb-free packages available

### Pin Function Table

| Name | Function |
|---|---|
| $\overline{CS}$ | Chip Select Input |
| SO | Serial Data Output |
| $\overline{WP}$ | Write-Protect |
| VSS | Ground |
| SI | Serial Data Input |
| SCK | Serial Clock Input |
| $\overline{HOLD}$ | Hold Input |
| VCC | Supply Voltage |

### Description

The Microchip Technology Inc. 25AA256/25LC256 (25XX256*) are 256k-bit Serial Electrically Erasable PROMs. The memory is accessed via a simple Serial Peripheral Interface™ (SPI™) compatible serial bus. The bus signals required are a clock input (SCK) plus separate data in (SI) and data out (SO) lines. Access to the device is controlled through a Chip Select ($\overline{CS}$) input.

Communication to the device can be paused via the hold pin ($\overline{HOLD}$). While the device is paused, transitions on its inputs will be ignored, with the exception of Chip Select, allowing the host to service higher priority interrupts.

The 25XX256 is available in standard packages including 8-lead PDIP and SOIC, and advanced packaging including 8-lead DFN and 8-lead TSSOP. Pb-free (Pure Sn) finish is also available.

### Package Types (not to scale)

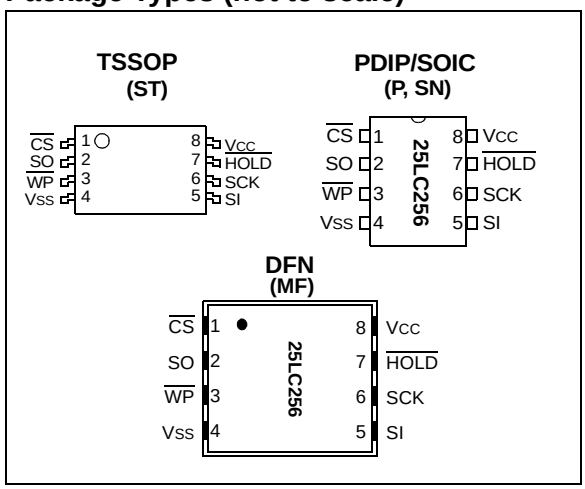


SPI is a registered trademark of Motorola Corporation.

* 25XX256 is used in this document as a generic part number for the 25AA256, 25LC256 devices.

## 1.0 ELECTRICAL CHARACTERISTICS

### Absolute Maximum Ratings (†)

$V_{CC}$ ..... 6.5V

All inputs and outputs w.r.t. $V_{SS}$ ..... -0.6V to $V_{CC}$ +1.0V

Storage temperature ..... -65°C to 150°C

Ambient temperature under bias ..... -40°C to 125°C

ESD protection on all pins ..... 4 kV

† NOTICE: Stresses above those listed under “Absolute Maximum Ratings” may cause permanent damage to the device. This is a stress rating only and functional operation of the device at those or any other conditions above those indicated in the operational listings of this specification is not implied. Exposure to maximum rating conditions for an extended period of time may affect device reliability.

**TABLE 1-1: DC CHARACTERISTICS**

| DC CHARACTERISTICS | | | Industrial (I): $T_A$ = -40°C to +85°C $V_{CC}$ = 1.8V to 5.5V<br>Automotive (E): $T_A$ = -40°C to +125°C $V_{CC}$ = 2.5V to 5.5V | | | |
|---|---|---|---|---|---|---|
| **Param. No.** | **Sym.** | **Characteristic** | **Min.** | **Max.** | **Units** | **Test Conditions** |
| D001 | $V_{IH1}$ | High-level input voltage | .7 $V_{CC}$ | $V_{CC}$+1 | V | |
| D002 | $V_{IL1}$ | Low-level input voltage | -0.3 | 0.3$V_{CC}$ | V | $V_{CC} \geq 2.7V$ |
| D003 | $V_{IL2}$ | | -0.3 | 0.2$V_{CC}$ | V | $V_{CC}$ < 2.7V |
| D004 | $V_{OL}$ | Low-level output voltage | — | 0.4 | V | $I_{OL}$ = 2.1 mA |
| D005 | $V_{OL}$ | | — | 0.2 | V | $I_{OL}$ = 1.0 mA, $V_{CC}$ < 2.5V |
| D006 | $V_{OH}$ | High-level output voltage | $V_{CC}$ -0.5 | — | V | $I_{OH}$ = -400 µA |
| D007 | $I_{LI}$ | Input leakage current | — | ±1 | µA | $\overline{CS}$ = $V_{CC}$, $V_{IN}$ = $V_{SS}$ TO $V_{CC}$ |
| D008 | $I_{LO}$ | Output leakage current | — | ±1 | µA | $\overline{CS}$ = $V_{CC}$, $V_{OUT}$ = $V_{SS}$ TO $V_{CC}$ |
| D009 | $C_{INT}$ | Internal Capacitance (all inputs and outputs) | — | 7 | pF | $T_A$ = 25°C, CLK = 1.0 MHz, $V_{CC}$ = 5.0V **(Note)** |
| D010 | $I_{CC}$ Read | Operating Current | —<br>— | 5<br>2.5 | mA<br>mA | $V_{CC}$ = 5.5V; $F_{CLK}$ = 10.0 MHz; SO = Open<br>$V_{CC}$ = 2.5V; $F_{CLK}$ = 5.0 MHz; SO = Open |
| D011 | $I_{CC}$ Write | | —<br>— | 5<br>3 | mA<br>mA | $V_{CC}$ = 5.5V<br>$V_{CC}$ = 2.5V |
| D012 | $I_{CCS}$ | Standby Current | —<br>— | 5<br>1 | µA<br>µA | $\overline{CS}$ = $V_{CC}$ = 5.5V, Inputs tied to $V_{CC}$ or $V_{SS}$, 125°C<br>$\overline{CS}$ = $V_{CC}$ = 5.5V, Inputs tied to $V_{CC}$ or $V_{SS}$, 85°C |

**Note:** This parameter is periodically sampled and not 100% tested.

 © 2003 Microchip Technology Inc.

**TABLE 1-2: AC CHARACTERISTICS**

| AC CHARACTERISTICS | | | Industrial (I): TA = -40°C to +85°C VCC = 1.8V to 5.5V<br>Automotive (E): TA = -40°C to +125°C VCC = 2.5V to 5.5V | | | |
|---|---|---|---|---|---|---|
| **Param. No.** | **Sym.** | **Characteristic** | **Min.** | **Max.** | **Units** | **Test Conditions** |
| 1 | FCLK | Clock Frequency | —<br>—<br>— | 10<br>5<br>3 | MHz<br>MHz<br>MHz | 4.5V ≤ Vcc ≤ 5.5V<br>2.5V ≤ Vcc < 4.5V<br>1.8V ≤ Vcc < 2.5V |
| 2 | TCSS | $\overline{CS}$ Setup Time | 50<br>100<br>150 | —<br>—<br>— | ns<br>ns<br>ns | 4.5V ≤ Vcc ≤ 5.5V<br>2.5V ≤ Vcc < 4.5V<br>1.8V ≤ Vcc < 2.5V |
| 3 | TCSH | $\overline{CS}$ Hold Time | 100<br>200<br>250 | —<br>—<br>— | ns<br>ns<br>ns | 4.5V ≤ Vcc ≤ 5.5V<br>2.5V ≤ Vcc < 4.5V<br>1.8V ≤ Vcc < 2.5V |
| 4 | TCSD | $\overline{CS}$ Disable Time | 50 | — | ns | — |
| 5 | Tsu | Data Setup Time | 10<br>20<br>30 | —<br>—<br>— | ns<br>ns<br>ns | 4.5V ≤ Vcc ≤ 5.5V<br>2.5V ≤ Vcc < 4.5V<br>1.8V ≤ Vcc < 2.5V |
| 6 | THD | Data Hold Time | 20<br>40<br>50 | —<br>—<br>— | ns<br>ns<br>ns | 4.5V ≤ Vcc ≤ 5.5V<br>2.5V ≤ Vcc < 4.5V<br>1.8V ≤ Vcc < 2.5V |
| 7 | TR | CLK Rise Time | — | 2 | µs | **(Note 1)** |
| 8 | TF | CLK Fall Time | — | 2 | µs | **(Note 1)** |
| 9 | THI | Clock High Time | 50<br>100<br>150 | —<br>—<br>— | ns<br>ns<br>ns | 4.5V ≤ Vcc ≤ 5.5V<br>2.5V ≤ Vcc < 4.5V<br>1.8V ≤ Vcc < 2.5V |
| 10 | TLO | Clock Low Time | 50<br>100<br>150 | —<br>—<br>— | ns<br>ns<br>ns | 4.5V ≤ Vcc ≤ 5.5V<br>2.5V ≤ Vcc < 4.5V<br>1.8V ≤ Vcc < 2.5V |
| 11 | TCLD | Clock Delay Time | 50 | — | ns | — |
| 12 | TCLE | Clock Enable Time | 50 | — | ns | — |
| 13 | TV | Output Valid from Clock Low | —<br>—<br>— | 50<br>100<br>160 | ns<br>ns<br>ns | 4.5V ≤ Vcc ≤ 5.5V<br>2.5V ≤ Vcc < 4.5V<br>1.8V ≤ Vcc < 2.5V |
| 14 | THO | Output Hold Time | 0 | — | ns | **(Note 1)** |
| 15 | TDIS | Output Disable Time | —<br>—<br>— | 40<br>80<br>160 | ns<br>ns<br>ns | 4.5V ≤ Vcc ≤ 5.5V**(Note 1)**<br>2.5V ≤ Vcc ≤ 4.5V**(Note 1)**<br>1.8V ≤ Vcc ≤ 2.5V**(Note 1)** |
| 16 | THS | $\overline{HOLD}$ Setup Time | 20<br>40<br>80 | —<br>—<br>— | ns<br>ns<br>ns | 4.5V ≤ Vcc ≤ 5.5V<br>2.5V ≤ Vcc < 4.5V<br>1.8V ≤ Vcc < 2.5V |

**Note 1:** This parameter is periodically sampled and not 100% tested.

**2:** TWC begins on the rising edge of $\overline{CS}$ after a valid write sequence and ends when the internal write cycle is complete.

**3:** This parameter is not tested but ensured by characterization. For endurance estimates in a specific application, please consult the Total Endurance™ Model which can be obtained from our web site: www.microchip.com.

**TABLE 1-2: AC CHARACTERISTICS (CONTINUED)**

| AC CHARACTERISTICS | | | Industrial (I): $T_A$ = -40°C to +85°C $V_{CC}$ = 1.8V to 5.5V<br>Automotive (E): $T_A$ = -40°C to +125°C $V_{CC}$ = 2.5V to 5.5V | | | |
|---|---|---|---|---|---|---|
| **Param. No.** | **Sym.** | **Characteristic** | **Min.** | **Max.** | **Units** | **Test Conditions** |
| 17 | $T_{HH}$ | $\overline{HOLD}$ Hold Time | 20<br>40<br>80 | —<br>—<br>— | ns<br>ns<br>ns | 4.5V ≤ Vcc ≤ 5.5V<br>2.5V ≤ Vcc < 4.5V<br>1.8V ≤ Vcc < 2.5V |
| 18 | $T_{HZ}$ | $\overline{HOLD}$ Low to Output High-Z | 30<br>60<br>160 | —<br>—<br>— | ns<br>ns<br>ns | 4.5V ≤ Vcc ≤ 5.5V**(Note 1)**<br>2.5V ≤ Vcc < 4.5V**(Note 1)**<br>1.8V ≤ Vcc < 2.5V**(Note 1)** |
| 19 | $T_{HV}$ | $\overline{HOLD}$ High to Output Valid | 30<br>60<br>160 | —<br>—<br>— | ns<br>ns<br>ns | 4.5V ≤ Vcc ≤ 5.5V<br>2.5V ≤ Vcc < 4.5V<br>1.8V ≤ Vcc < 2.5V |
| 20 | $T_{WC}$ | Internal Write Cycle Time | — | 5 | ms | **(NOTE 2)** |
| 21 | — | Endurance | 1M | — | E/W Cycles | **(NOTE 3)** |

**Note 1:** This parameter is periodically sampled and not 100% tested.

**2:** $T_{WC}$ begins on the rising edge of $\overline{CS}$ after a valid write sequence and ends when the internal write cycle is complete.

**3:** This parameter is not tested but ensured by characterization. For endurance estimates in a specific application, please consult the Total Endurance™ Model which can be obtained from our web site: www.microchip.com.

**TABLE 1-3: AC TEST CONDITIONS**

| **AC Waveform:** | |
|---|---|
| $V_{LO}$ = 0.2V | — |
| $V_{HI}$ = $V_{CC}$ - 0.2V | **(Note 1)** |
| $V_{HI}$ = 4.0V | **(Note 2)** |
| $C_L$ = 100 pF | **—** |
| **Timing Measurement Reference Level** | |
| Input | 0.5 $V_{CC}$ |
| Output | 0.5 $V_{CC}$ |

**Note 1:** For $V_{CC}$ ≤ 4.0V

**2:** For Vcc > 4.0V

 © 2003 Microchip Technology Inc.

**FIGURE 1-1: HOLD TIMING**

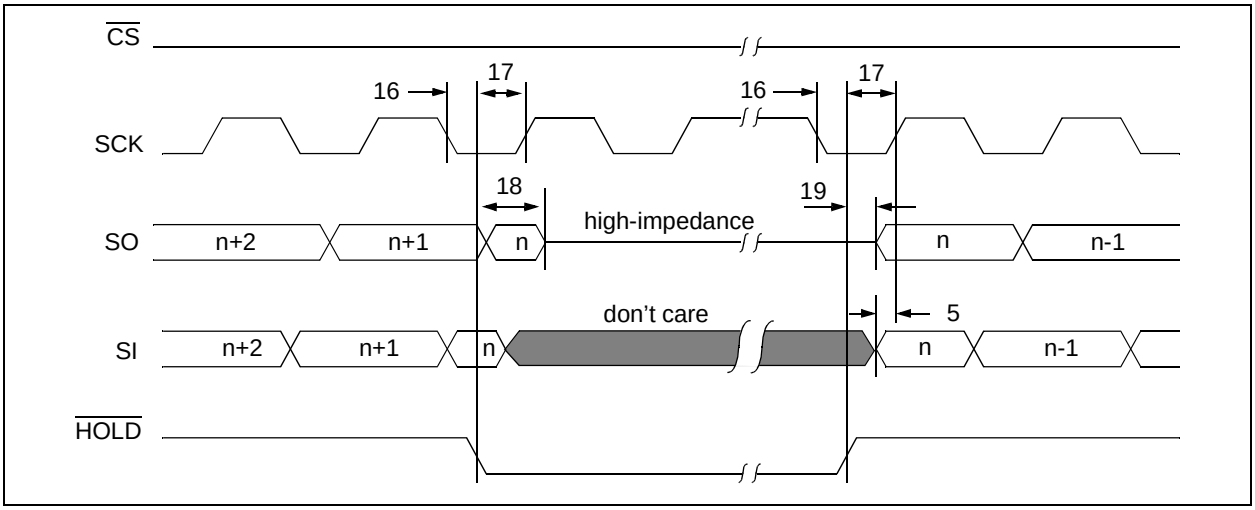


**FIGURE 1-2: SERIAL INPUT TIMING**

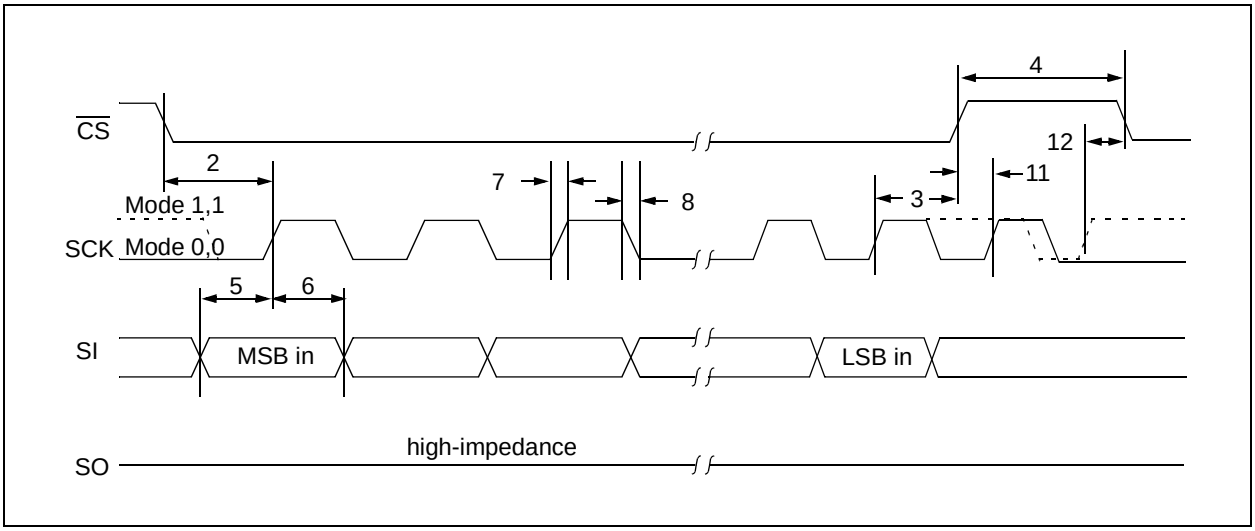


**FIGURE 1-3: SERIAL OUTPUT TIMING**

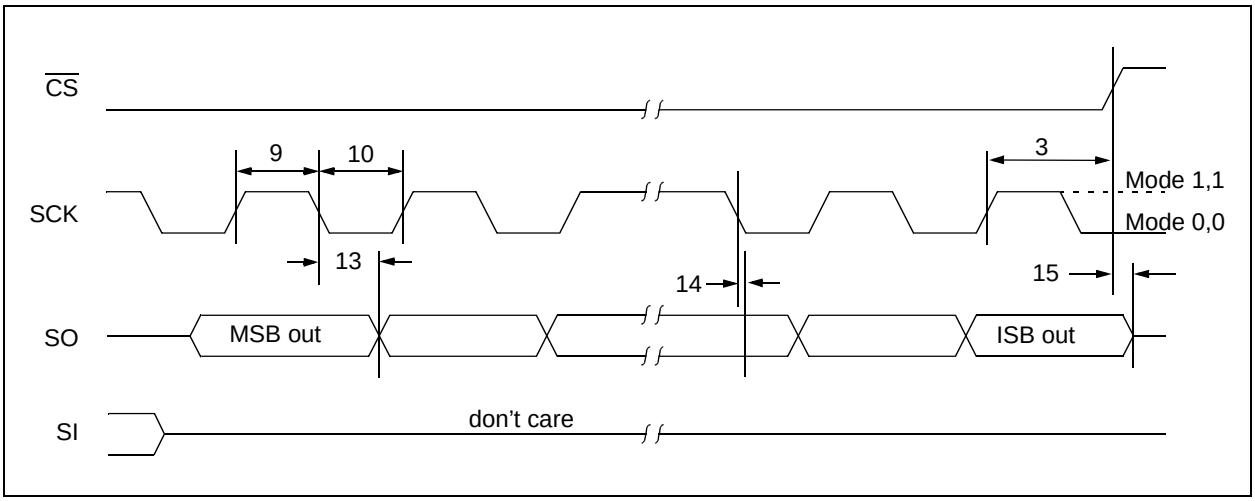

# 2.0 FUNCTIONAL DESCRIPTION

## 2.1 Principles of Operation

The 25XX256 is a 32768 byte Serial EEPROM designed to interface directly with the Serial Peripheral Interface (SPI) port of many of today's popular microcontroller families, including Microchip's PICmicro® microcontrollers. It may also interface with microcontrollers that do not have a built-in SPI port by using discrete I/O lines programmed properly in firmware to match the SPI protocol.

The 25XX256 contains an 8-bit instruction register. The device is accessed via the SI pin, with data being clocked in on the rising edge of SCK. The $\overline{CS}$ pin must be low and the $\overline{HOLD}$ pin must be high for the entire operation.

Table 2-1 contains a list of the possible instruction bytes and format for device operation. All instructions, addresses, and data are transferred MSB first, LSB last.

Data (SI) is sampled on the first rising edge of SCK after $\overline{CS}$ goes low. If the clock line is shared with other peripheral devices on the SPI bus, the user can assert the $\overline{HOLD}$ input and place the 25XX256 in 'HOLD' mode. After releasing the $\overline{HOLD}$ pin, operation will resume from the point when the $\overline{HOLD}$ was asserted.

## 2.2 Read Sequence

The device is selected by pulling $\overline{CS}$ low. The 8-bit read instruction is transmitted to the 25XX256 followed by the 16-bit address, with the first MSB of the address being a don't care bit. After the correct read instruction and address are sent, the data stored in the memory at the selected address is shifted out on the SO pin. The data stored in the memory at the next address can be read sequentially by continuing to provide clock pulses. The internal address pointer is automatically incremented to the next higher address after each byte of data is shifted out. When the highest address is reached (7FFFh), the address counter rolls over to address 0000h allowing the read cycle to be continued indefinitely. The read operation is terminated by raising the $\overline{CS}$ pin (Figure 2-1).

## 2.3 Write Sequence

Prior to any attempt to write data to the 25XX256, the write enable latch must be set by issuing the `WREN` instruction (Figure 2-4). This is done by setting $\overline{CS}$ low and then clocking out the proper instruction into the 25XX256. After all eight bits of the instruction are transmitted, the $\overline{CS}$ must be brought high to set the write enable latch. If the write operation is initiated immediately after the `WREN` instruction without $\overline{CS}$ being brought high, the data will not be written to the array because the write enable latch will not have been properly set.

Once the write enable latch is set, the user may proceed by setting the $\overline{CS}$ low, issuing a `WRITE` instruction, followed by the 16-bit address, with the first MSB of the address being a don't care bit, and then the data to be written. Up to 64 bytes of data can be sent to the device before a write cycle is necessary. The only restriction is that all of the bytes must reside in the same page.

| | |
|---|---|
| **Note:** | Page write operations are limited to writing bytes within a single physical page, **regardless** of the number of bytes actually being written. Physical page boundaries start at addresses that are integer multiples of the page buffer size (or 'page size') and, end at addresses that are integer multiples of page size - 1. If a Page Write command attempts to write across a physical page boundary, the result is that the data wraps around to the beginning of the current page (overwriting data previously stored there), instead of being written to the next page as might be expected. It is therefore necessary for the application software to prevent page write operations that would attempt to cross a page boundary. |

For the data to be actually written to the array, the $\overline{CS}$ must be brought high after the Least Significant bit (D0) of the $n^{th}$ data byte has been clocked in. If $\overline{CS}$ is brought high at any other time, the write operation will not be completed. Refer to Figure 2-2 and Figure 2-3 for more detailed illustrations on the byte write sequence and the page write sequence respectively. While the write is in progress, the Status register may be read to check the status of the WPEN, WIP, WEL, BP1 and BP0 bits (Figure 2-6). A read attempt of a memory array location will not be possible during a write cycle. When the write cycle is completed, the write enable latch is reset.

 © 2003 Microchip Technology Inc.

## BLOCK DIAGRAM

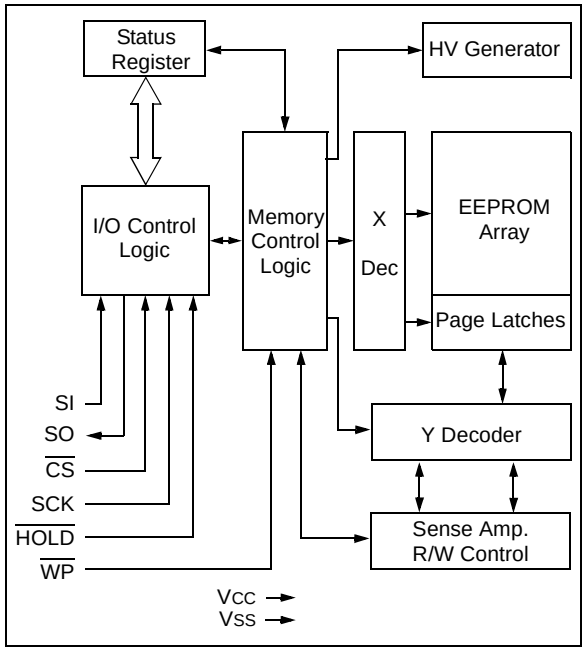


**TABLE 2-1: INSTRUCTION SET**

| Instruction Name | Instruction Format | Description |
|---|---|---|
| READ | 0000 0011 | Read data from memory array beginning at selected address |
| WRITE | 0000 0010 | Write data to memory array beginning at selected address |
| WRDI | 0000 0100 | Reset the write enable latch (disable write operations) |
| WREN | 0000 0110 | Set the write enable latch (enable write operations) |
| RDSR | 0000 0101 | Read Status register |
| WRSR | 0000 0001 | Write Status register |

**FIGURE 2-1: READ SEQUENCE**

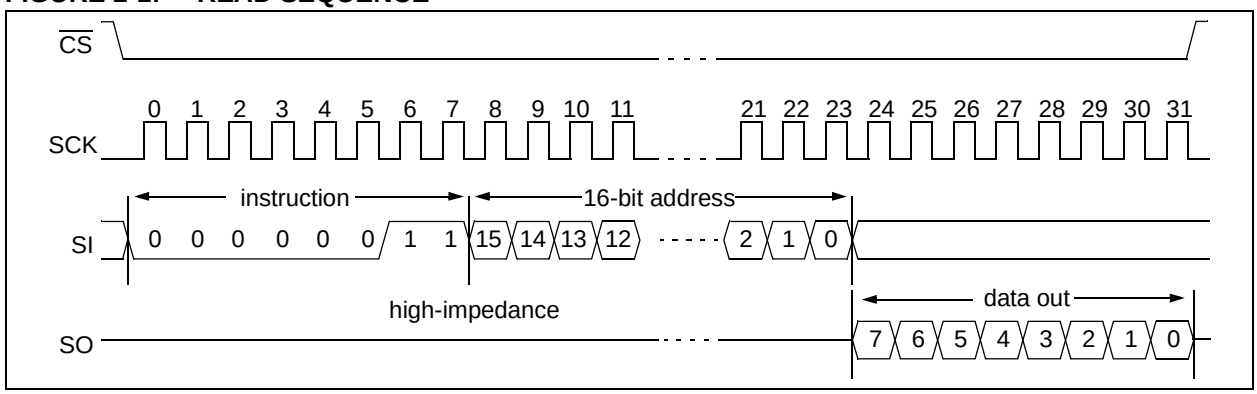

**FIGURE 2-2: BYTE WRITE SEQUENCE**

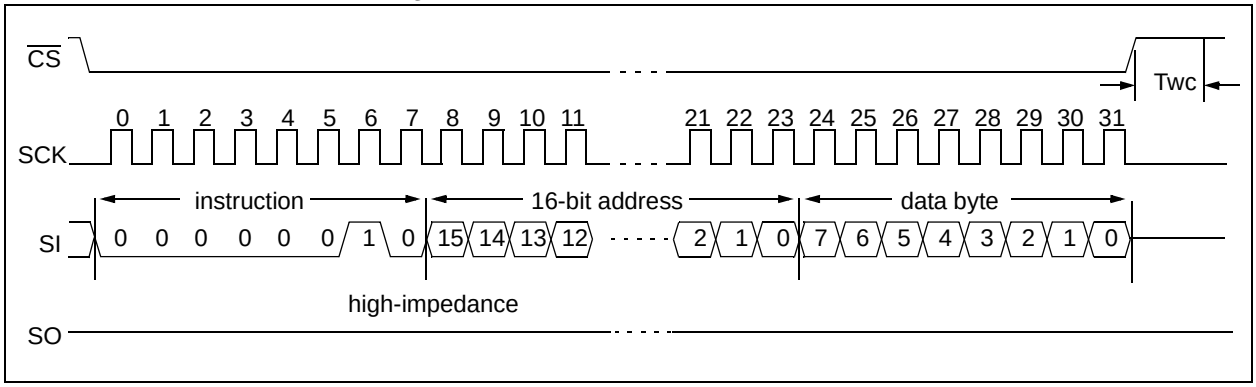


**FIGURE 2-3: PAGE WRITE SEQUENCE**

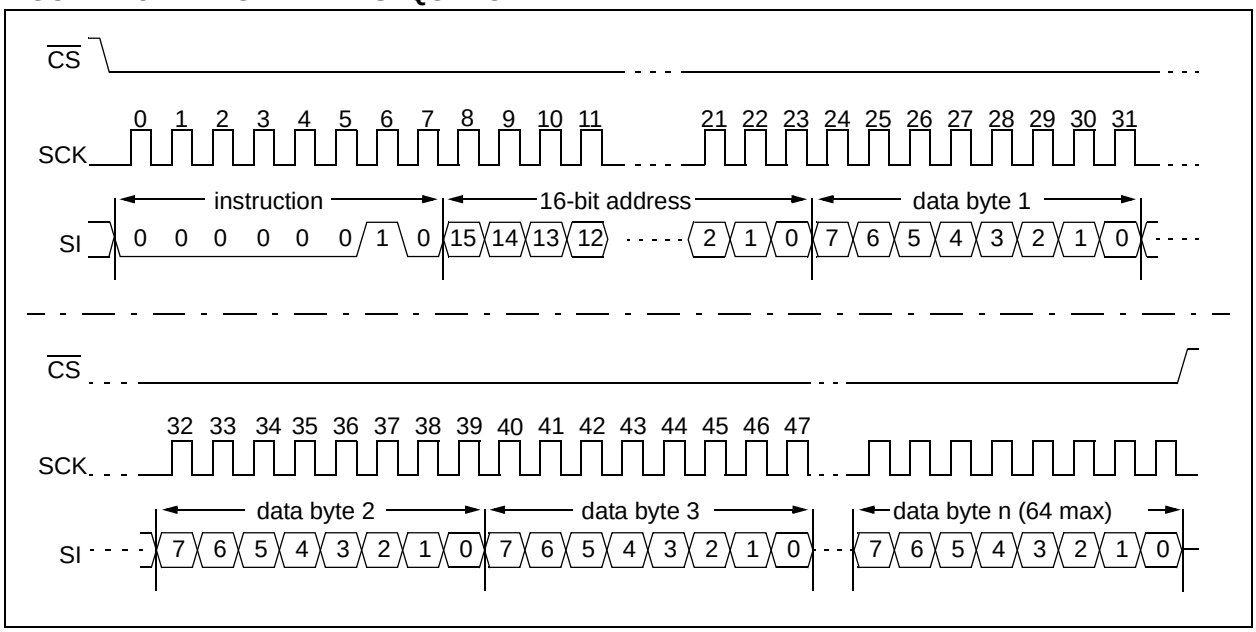


 © 2003 Microchip Technology Inc.

## 2.4 Write Enable (WREN) and Write Disable (WRDI)

The 25XX256 contains a write enable latch. See Table 2-4 for the Write-Protect Functionality Matrix. This latch must be set before any write operation will be completed internally. The WREN instruction will set the latch, and the WRDI will reset the latch.

The following is a list of conditions under which the write enable latch will be reset:

- Power-up
- WRDI instruction successfully executed
- WRSR instruction successfully executed
- WRITE instruction successfully executed

**FIGURE 2-4: WRITE ENABLE SEQUENCE (WREN)**

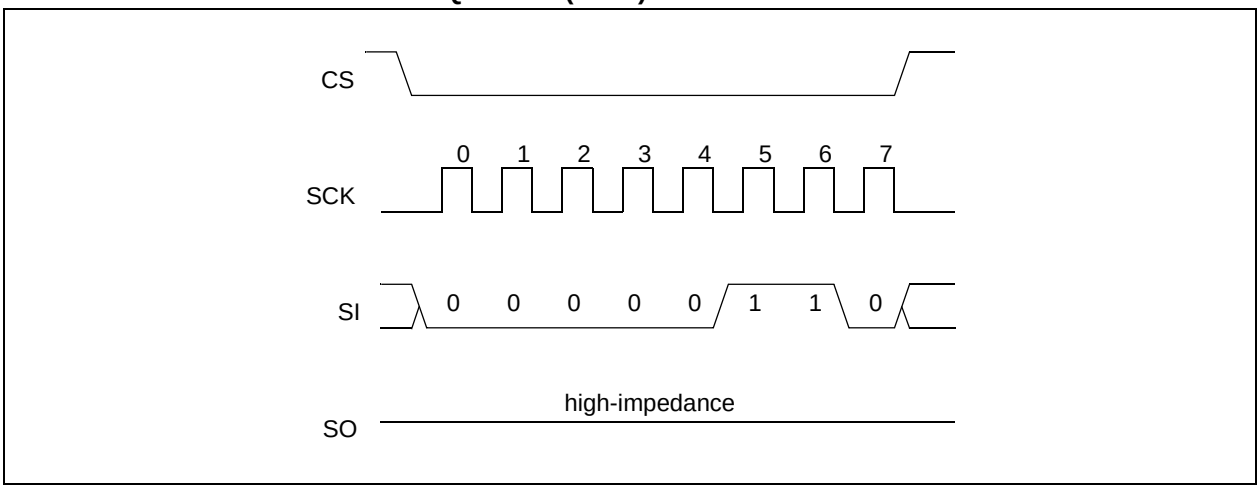


**FIGURE 2-5: WRITE DISABLE SEQUENCE (WRDI)**

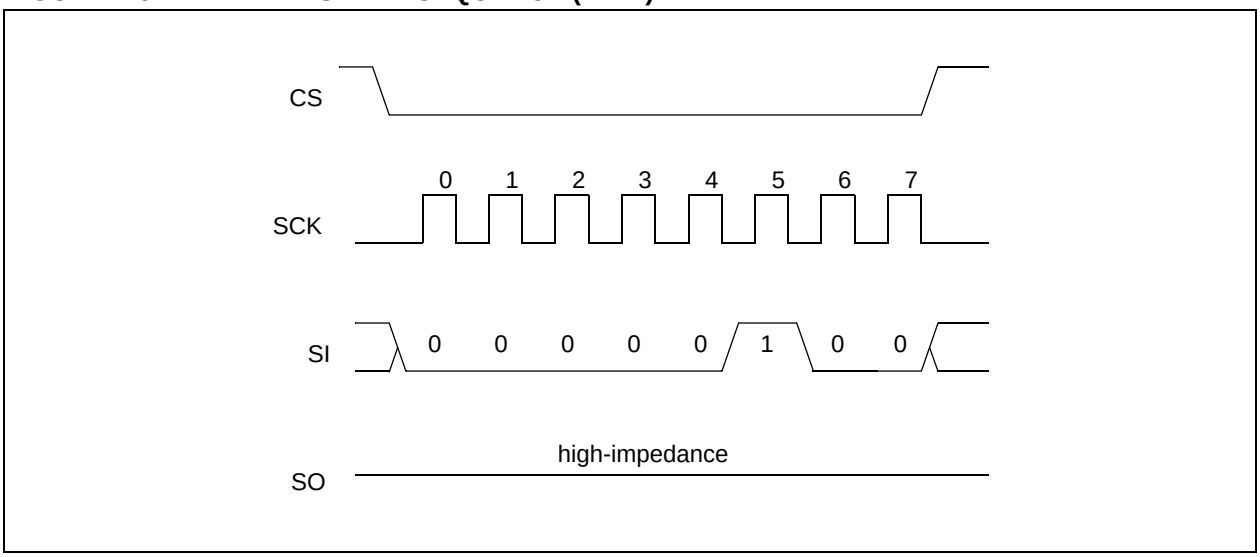

## 2.5 Read Status Register Instruction (RDSR)

The Read Status Register instruction (RDSR) provides access to the Status register. The Status register may be read at any time, even during a write cycle. The Status register is formatted as follows:

**TABLE 2-2: STATUS REGISTER**

| 7 | 6 | 5 | 4 | 3 | 2 | 1 | 0 |
|---|---|---|---|---|---|---|---|
| W/R | – | – | – | W/R | W/R | R | R |
| WPEN | X | X | X | BP1 | BP0 | WEL | WIP |
| W/R = writable/readable. R = read-only. | | | | | | | |

The **Write-In-Process (WIP)** bit indicates whether the 25XX256 is busy with a write operation. When set to a '1', a write is in progress, when set to a '0', no write is in progress. This bit is read-only.

The **Write Enable Latch (WEL)** bit indicates the status of the write enable latch and is read-only. When set to a '1', the latch allows writes to the array, when set to a '0', the latch prohibits writes to the array. The state of this bit can always be updated via the WREN or WRDI commands regardless of the state of write protection on the Status register. These commands are shown in Figure 2-4 and Figure 2-5.

The **Block Protection (BP0 and BP1)** bits indicate which blocks are currently write-protected. These bits are set by the user issuing the WRSR instruction. These bits are nonvolatile, and are shown in Table 2-3.

See Figure 2-6 for the RDSR timing sequence.

**FIGURE 2-6: READ STATUS REGISTER TIMING SEQUENCE (RDSR)**

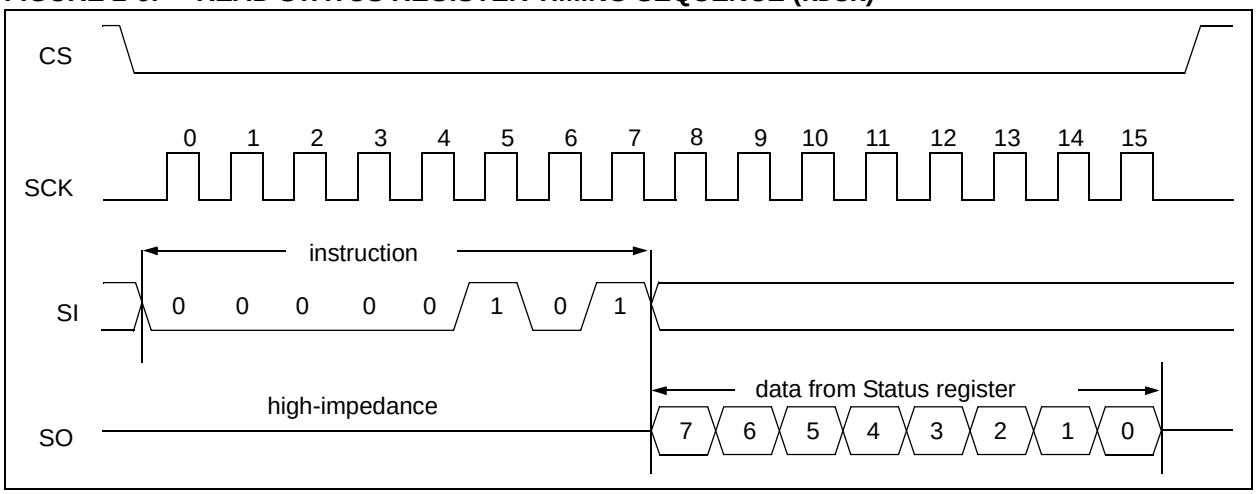


 © 2003 Microchip Technology Inc.

## 2.6 Write Status Register Instruction (WRSR)

The Write Status Register instruction (WRSR) allows the user to write to the nonvolatile bits in the Status register as shown in Table 2-2. The user is able to select one of four levels of protection for the array by writing to the appropriate bits in the Status register. The array is divided up into four segments. The user has the ability to write-protect none, one, two, or all four of the segments of the array. The partitioning is controlled as shown in Table 2-3.

The Write-Protect Enable (WPEN) bit is a nonvolatile bit that is available as an enable bit for the $\overline{WP}$ pin. The Write-Protect ($\overline{WP}$) pin and the Write-Protect Enable (WPEN) bit in the Status register control the programmable hardware write-protect feature. Hardware write protection is enabled when $\overline{WP}$ pin is low and the WPEN bit is high. Hardware write protection is disabled when either the $\overline{WP}$ pin is high or the WPEN bit is low. When the chip is hardware write-protected, only writes to nonvolatile bits in the Status register are disabled. See Table 2-4 for a matrix of functionality on the WPEN bit.

See Figure 2-7 for the WRSR timing sequence.

**TABLE 2-3: ARRAY PROTECTION**

| BP1 | BP0 | Array Addresses Write-Protected |
|---|---|---|
| 0 | 0 | none |
| 0 | 1 | upper 1/4 (6000h - 7FFFh) |
| 1 | 0 | upper 1/2 (4000h - 7FFFh) |
| 1 | 1 | all (0000h - 7FFFh) |

**FIGURE 2-7: WRITE STATUS REGISTER TIMING SEQUENCE (WRSR)**

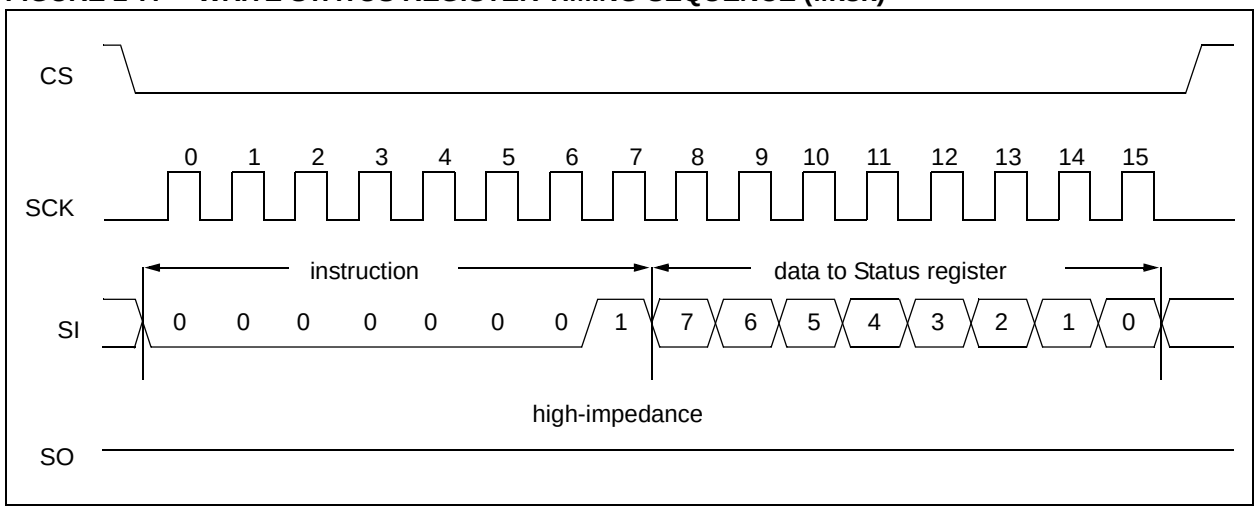


**Note:** An internal write cycle (Twc) is initiated on the rising edge of $\overline{CS}$ after a valid write Status Register sequence.

## 2.7 Data Protection

The following protection has been implemented to prevent inadvertent writes to the array:

- The write enable latch is reset on power-up
- A write enable instruction must be issued to set the write enable latch
- After a byte write, page write or Status register write, the write enable latch is reset
- $\overline{CS}$ must be set high after the proper number of clock cycles to start an internal write cycle
- Access to the array during an internal write cycle is ignored and programming is continued

## 2.8 Power-On State

The 25XX256 powers on in the following state:

- The device is in low-power Standby mode ($\overline{CS}$ = 1)
- The write enable latch is reset
- SO is in high-impedance state
- A high-to-low-level transition on $\overline{CS}$ is required to enter active state

**TABLE 2-4: WRITE-PROTECT FUNCTIONALITY MATRIX**

| WEL (SR bit 1) | WPEN (SR bit 7) | $\overline{WP}$ (pin 3) | Protected Blocks | Unprotected Blocks | Status Register |
|---|---|---|---|---|---|
| 0 | x | x | Protected | Protected | Protected |
| 1 | 0 | x | Protected | Writable | Writable |
| 1 | 1 | 0 (low) | Protected | Writable | Protected |
| 1 | 1 | 1 (high) | Protected | Writable | Writable |

x = don't care

 © 2003 Microchip Technology Inc.

## 3.0 PIN DESCRIPTIONS

The descriptions of the pins are listed in Table 3-1.

**TABLE 3-1: PIN FUNCTION TABLE**

| Name | Pin Number | Function |
|---|---|---|
| $\overline{CS}$ | 1 | Chip Select Input |
| SO | 2 | Serial Data Output |
| $\overline{WP}$ | 3 | Write-Protect Pin |
| VSS | 4 | Ground |
| SI | 5 | Serial Data Input |
| SCK | 6 | Serial Clock Input |
| $\overline{HOLD}$ | 7 | Hold Input |
| VCC | 8 | Supply Voltage |

### 3.1 Chip Select ($\overline{CS}$)

A low level on this pin selects the device. A high level deselects the device and forces it into Standby mode. However, a programming cycle which is already initiated or in progress will be completed, regardless of the $\overline{CS}$ input signal. If $\overline{CS}$ is brought high during a program cycle, the device will go into Standby mode as soon as the programming cycle is complete. When the device is deselected, SO goes to the high-impedance state, allowing multiple parts to share the same SPI bus. A low-to-high transition on $\overline{CS}$ after a valid write sequence initiates an internal write cycle. After power-up, a low level on $\overline{CS}$ is required prior to any sequence being initiated.

### 3.2 Serial Output (SO)

The SO pin is used to transfer data out of the 25XX256. During a read cycle, data is shifted out on this pin after the falling edge of the serial clock.

### 3.3 Write-Protect ($\overline{WP}$)

This pin is used in conjunction with the WPEN bit in the Status register to prohibit writes to the nonvolatile bits in the Status register. When $\overline{WP}$ is low and WPEN is high, writing to the nonvolatile bits in the Status register is disabled. All other operations function normally. When $\overline{WP}$ is high, all functions, including writes to the nonvolatile bits in the Status register, operate normally. If the WPEN bit is set, $\overline{WP}$ low during a Status register write sequence will disable writing to the Status register. If an internal write cycle has already begun, $\overline{WP}$ going low will have no effect on the write.

The $\overline{WP}$ pin function is blocked when the WPEN bit in the Status register is low. This allows the user to install the 25XX256 in a system with $\overline{WP}$ pin grounded and still be able to write to the Status register. The $\overline{WP}$ pin functions will be enabled when the WPEN bit is set high.

### 3.4 Serial Input (SI)

The SI pin is used to transfer data into the device. It receives instructions, addresses and data. Data is latched on the rising edge of the serial clock.

### 3.5 Serial Clock (SCK)

The SCK is used to synchronize the communication between a master and the 25XX256. Instructions, addresses or data present on the SI pin are latched on the rising edge of the clock input, while data on the SO pin is updated after the falling edge of the clock input.

### 3.6 Hold ($\overline{HOLD}$)

The $\overline{HOLD}$ pin is used to suspend transmission to the 25XX256 while in the middle of a serial sequence without having to retransmit the entire sequence again. It must be held high any time this function is not being used. Once the device is selected and a serial sequence is underway, the $\overline{HOLD}$ pin may be pulled low to pause further serial communication without resetting the serial sequence. The $\overline{HOLD}$ pin must be brought low while SCK is low, otherwise the HOLD function will not be invoked until the next SCK high-to-low transition. The 25XX256 must remain selected during this sequence. The SI, SCK and SO pins are in a high-impedance state during the time the device is paused and transitions on these pins will be ignored. To resume serial communication, $\overline{HOLD}$ must be brought high while the SCK pin is low, otherwise serial communication will not resume. Lowering the HOLD line at any time will tri-state the SO line.

## 4.0 PACKAGING INFORMATION

### 4.1 Package Marking Information

8-Lead DFN

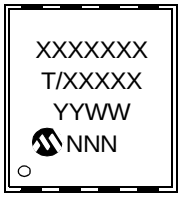


Example:

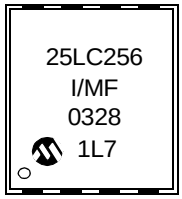


8-Lead PDIP

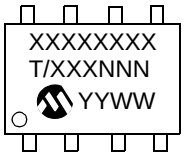


Example:

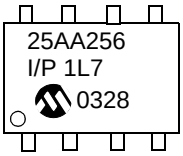


8-Lead SOIC

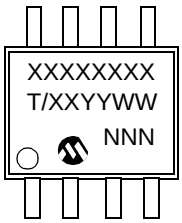


Example:

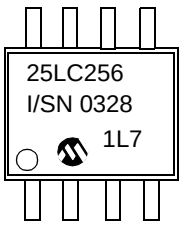


8-Lead TSSOP

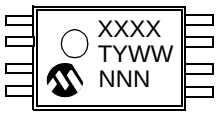


Example:

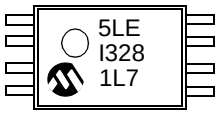


| TSSOP 1st Line Marking Codes | | |
|---|---|---|
| Device | std mark | Pb-free mark |
| 25AA256 | 5AE | NAE |
| 25LC256 | 5LE | NLE |

| | | |
|---|---|---|
| **Legend:** | XX...X | Part number |
| | T | Temperature (I, E) |
| | Blank | Commercial |
| | YY | Year code (last 2 digits of calendar year) except TSSOP which uses only the last 1 digit |
| | WW | Week code (week of January 1 is week ‘01’) |
| | NNN | Alphanumeric traceability code |

**Note**: Custom marking available.

 © 2003 Microchip Technology Inc.

## 8-Lead Plastic Dual Flat No Lead Package (MF) 6x5 mm Body (DFN-S)

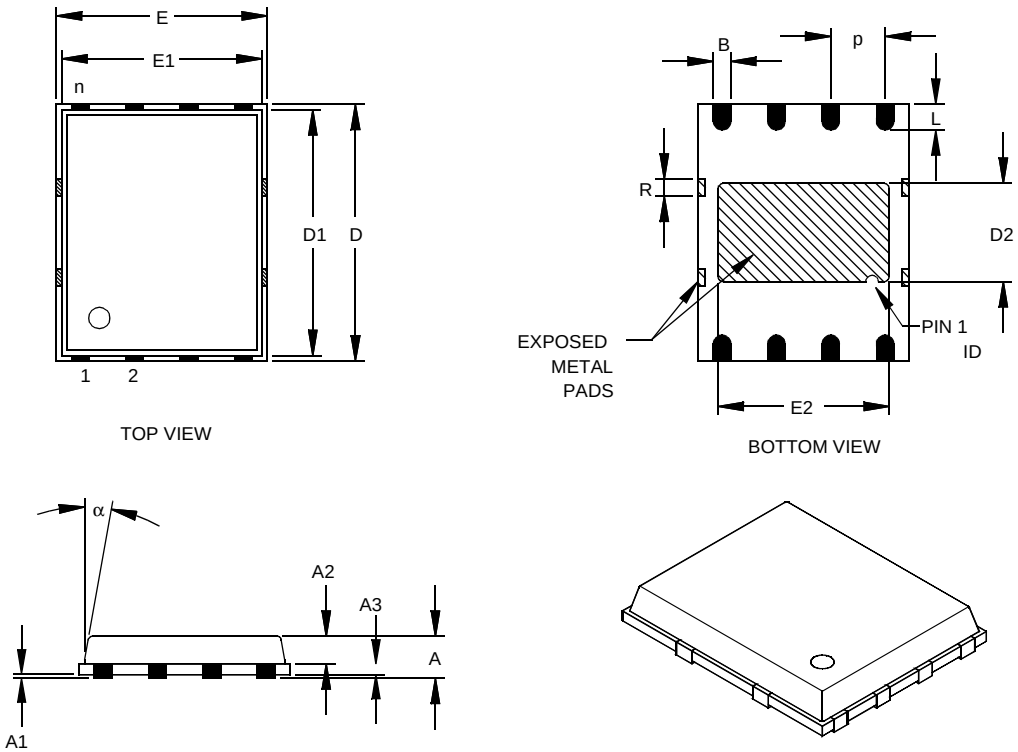


| Units | | INCHES | | | MILLIMETERS* | | |
|---|---|---|---|---|---|---|---|
| Dimension Limits | | MIN | NOM | MAX | MIN | NOM | MAX |
| Number of Pins | n | | 8 | | | 8 | |
| Pitch | p | | .050 BSC | | | 1.27 BSC | |
| Overall Height | A | | .033 | .039 | | 0.85 | 1.00 |
| Molded Package Thickness | A2 | | .026 | .031 | | 0.65 | 0.80 |
| Standoff | A1 | .000 | .0004 | .002 | 0.00 | 0.01 | 0.05 |
| Base Thickness | A3 | | .008 REF. | | | 0.20 REF. | |
| Overall Length | E | | .194 BSC | | | 4.92 BSC | |
| Molded Package Length | E1 | | .184 BSC | | | 4.67 BSC | |
| Exposed Pad Length | E2 | .152 | .158 | .163 | 3.85 | 4.00 | 4.15 |
| Overall Width | D | | .236 BSC | | | 5.99 BSC | |
| Molded Package Width | D1 | | .226 BSC | | | 5.74 BSC | |
| Exposed Pad Width | D2 | .085 | .091 | .097 | 2.16 | 2.31 | 2.46 |
| Lead Width | B | .014 | .016 | .019 | 0.35 | 0.40 | 0.47 |
| Lead Length | L | .020 | .024 | .030 | 0.50 | 0.60 | 0.75 |
| Tie Bar Width | R | | .014 | | | .356 | |
| Mold Draft Angle Top | α | | | 12° | | | 12° |

*Controlling Parameter

Notes:
Dimensions D and E1 do not include mold flash or protrusions. Mold flash or protrusions shall not exceed .010” (0.254mm) per side.
JEDEC equivalent: pending

Drawing No. C04-113

## 8-Lead Plastic Dual In-line (P) – 300 mil (PDIP)

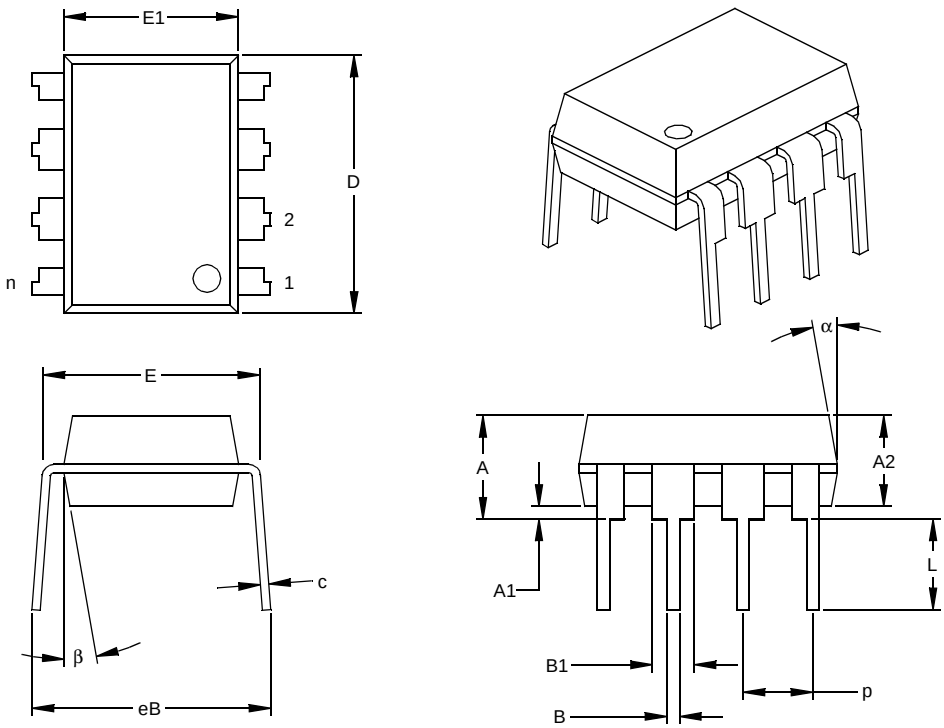


| Units | | INCHES* | | | MILLIMETERS | | |
|---|---|---|---|---|---|---|---|
| Dimension Limits | | MIN | NOM | MAX | MIN | NOM | MAX |
| Number of Pins | n | | 8 | | | 8 | |
| Pitch | p | | .100 | | | 2.54 | |
| Top to Seating Plane | A | .140 | .155 | .170 | 3.56 | 3.94 | 4.32 |
| Molded Package Thickness | A2 | .115 | .130 | .145 | 2.92 | 3.30 | 3.68 |
| Base to Seating Plane | A1 | .015 | | | 0.38 | | |
| Shoulder to Shoulder Width | E | .300 | .313 | .325 | 7.62 | 7.94 | 8.26 |
| Molded Package Width | E1 | .240 | .250 | .260 | 6.10 | 6.35 | 6.60 |
| Overall Length | D | .360 | .373 | .385 | 9.14 | 9.46 | 9.78 |
| Tip to Seating Plane | L | .125 | .130 | .135 | 3.18 | 3.30 | 3.43 |
| Lead Thickness | c | .008 | .012 | .015 | 0.20 | 0.29 | 0.38 |
| Upper Lead Width | B1 | .045 | .058 | .070 | 1.14 | 1.46 | 1.78 |
| Lower Lead Width | B | .014 | .018 | .022 | 0.36 | 0.46 | 0.56 |
| Overall Row Spacing § | eB | .310 | .370 | .430 | 7.87 | 9.40 | 10.92 |
| Mold Draft Angle Top | α | 5 | 10 | 15 | 5 | 10 | 15 |
| Mold Draft Angle Bottom | β | 5 | 10 | 15 | 5 | 10 | 15 |

* Controlling Parameter
§ Significant Characteristic

Notes:
Dimensions D and E1 do not include mold flash or protrusions. Mold flash or protrusions shall not exceed .010” (0.254mm) per side.
JEDEC Equivalent: MS-001
Drawing No. C04-018

 © 2003 Microchip Technology Inc.

## 8-Lead Plastic Small Outline (SN) – Narrow, 150 mil (SOIC)

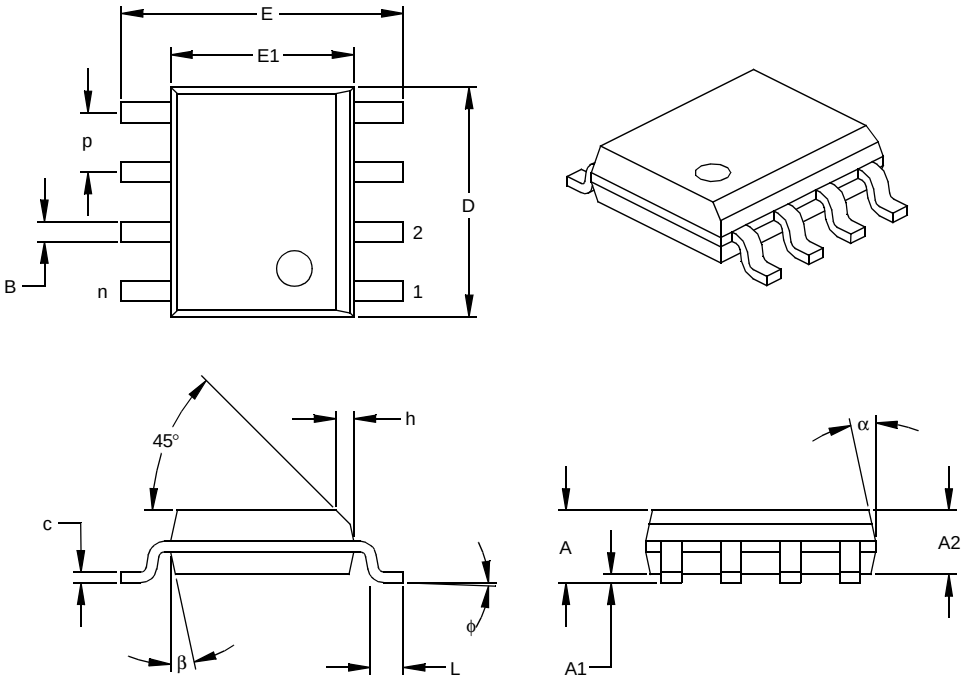


| Units | | INCHES* | | | MILLIMETERS | | |
|---|---|---|---|---|---|---|---|
| Dimension Limits | | MIN | NOM | MAX | MIN | NOM | MAX |
| Number of Pins | n | | 8 | | | 8 | |
| Pitch | p | | .050 | | | 1.27 | |
| Overall Height | A | .053 | .061 | .069 | 1.35 | 1.55 | 1.75 |
| Molded Package Thickness | A2 | .052 | .056 | .061 | 1.32 | 1.42 | 1.55 |
| Standoff § | A1 | .004 | .007 | .010 | 0.10 | 0.18 | 0.25 |
| Overall Width | E | .228 | .237 | .244 | 5.79 | 6.02 | 6.20 |
| Molded Package Width | E1 | .146 | .154 | .157 | 3.71 | 3.91 | 3.99 |
| Overall Length | D | .189 | .193 | .197 | 4.80 | 4.90 | 5.00 |
| Chamfer Distance | h | .010 | .015 | .020 | 0.25 | 0.38 | 0.51 |
| Foot Length | L | .019 | .025 | .030 | 0.48 | 0.62 | 0.76 |
| Foot Angle | φ | 0 | 4 | 8 | 0 | 4 | 8 |
| Lead Thickness | c | .008 | .009 | .010 | 0.20 | 0.23 | 0.25 |
| Lead Width | B | .013 | .017 | .020 | 0.33 | 0.42 | 0.51 |
| Mold Draft Angle Top | α | 0 | 12 | 15 | 0 | 12 | 15 |
| Mold Draft Angle Bottom | β | 0 | 12 | 15 | 0 | 12 | 15 |

* Controlling Parameter
§ Significant Characteristic

Notes:
Dimensions D and E1 do not include mold flash or protrusions. Mold flash or protrusions shall not exceed .010” (0.254mm) per side.
JEDEC Equivalent: MS-012
Drawing No. C04-057

## 8-Lead Plastic Thin Shrink Small Outline (ST) – 4.4 mm (TSSOP)

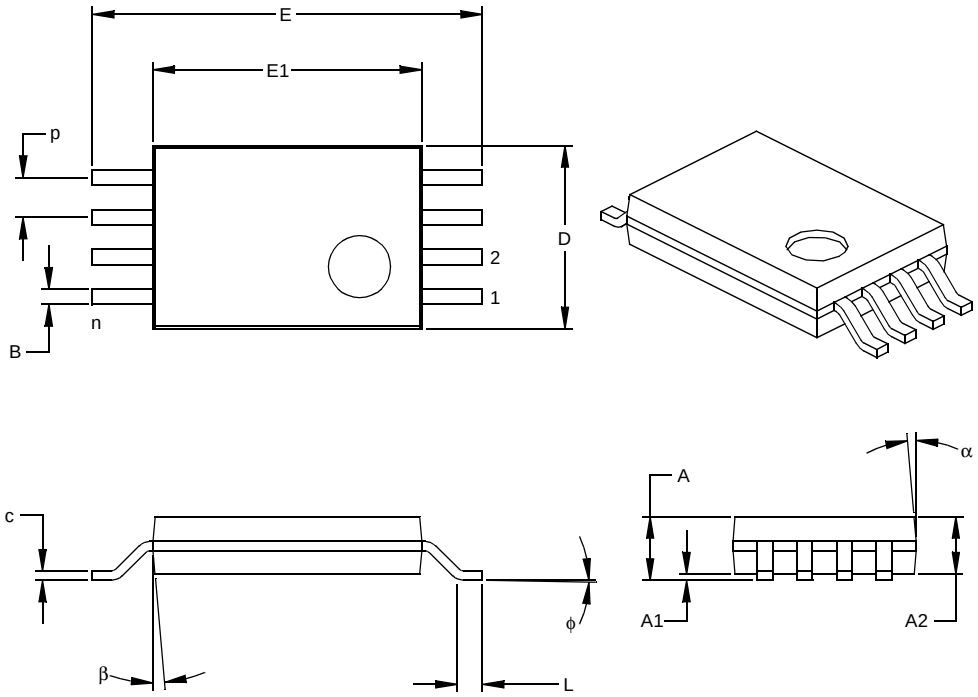


| Units | | INCHES | | | MILLIMETERS* | | |
|---|---|---|---|---|---|---|---|
| Dimension Limits | | MIN | NOM | MAX | MIN | NOM | MAX |
| Number of Pins | n | | 8 | | | 8 | |
| Pitch | p | | .026 | | | 0.65 | |
| Overall Height | A | | | .043 | | | 1.10 |
| Molded Package Thickness | A2 | .033 | .035 | .037 | 0.85 | 0.90 | 0.95 |
| Standoff § | A1 | .002 | .004 | .006 | 0.05 | 0.10 | 0.15 |
| Overall Width | E | .246 | .251 | .256 | 6.25 | 6.38 | 6.50 |
| Molded Package Width | E1 | .169 | .173 | .177 | 4.30 | 4.40 | 4.50 |
| Molded Package Length | D | .114 | .118 | .122 | 2.90 | 3.00 | 3.10 |
| Foot Length | L | .020 | .024 | .028 | 0.50 | 0.60 | 0.70 |
| Foot Angle | φ | 0 | 4 | 8 | 0 | 4 | 8 |
| Lead Thickness | c | .004 | .006 | .008 | 0.09 | 0.15 | 0.20 |
| Lead Width | B | .007 | .010 | .012 | 0.19 | 0.25 | 0.30 |
| Mold Draft Angle Top | α | 0 | 5 | 10 | 0 | 5 | 10 |
| Mold Draft Angle Bottom | β | 0 | 5 | 10 | 0 | 5 | 10 |

* Controlling Parameter
§ Significant Characteristic

Notes:
Dimensions D and E1 do not include mold flash or protrusions. Mold flash or protrusions shall not exceed .005” (0.127mm) per side.
JEDEC Equivalent: MO-153
Drawing No. C04-086

 © 2003 Microchip Technology Inc.

## APPENDIX A: REVISION HISTORY

**Revision C**

Corrections to Section 1.0, Electrical Characteristics.

**NOTES:**

 © 2003 Microchip Technology Inc.

## ON-LINE SUPPORT

Microchip provides on-line support on the Microchip World Wide Web site.

The web site is used by Microchip as a means to make files and information easily available to customers. To view the site, the user must have access to the Internet and a web browser, such as Netscape® or Microsoft® Internet Explorer. Files are also available for FTP download from our FTP site.

### Connecting to the Microchip Internet Web Site

The Microchip web site is available at the following URL:

**www.microchip.com**

The file transfer site is available by using an FTP service to connect to:

**ftp://ftp.microchip.com**

The web site and file transfer site provide a variety of services. Users may download files for the latest Development Tools, Data Sheets, Application Notes, User's Guides, Articles and Sample Programs. A variety of Microchip specific business information is also available, including listings of Microchip sales offices, distributors and factory representatives. Other data available for consideration is:

- Latest Microchip Press Releases
- Technical Support Section with Frequently Asked Questions
- Design Tips
- Device Errata
- Job Postings
- Microchip Consultant Program Member Listing
- Links to other useful web sites related to Microchip Products
- Conferences for products, Development Systems, technical information and more
- Listing of seminars and events

## SYSTEMS INFORMATION AND UPGRADE HOT LINE

The Systems Information and Upgrade Line provides system users a listing of the latest versions of all of Microchip's development systems software products. Plus, this line provides information on how customers can receive the most current upgrade kits.The Hot Line Numbers are:

1-800-755-2345 for U.S. and most of Canada, and

1-480-792-7302 for the rest of the world.

042003

## READER RESPONSE

It is our intention to provide you with the best documentation possible to ensure successful use of your Microchip product. If you wish to provide your comments on organization, clarity, subject matter, and ways in which our documentation can better serve you, please FAX your comments to the Technical Publications Manager at (480) 792-4150.

Please list the following information, and use this outline to provide us with your comments about this document.

To: Technical Publications Manager Total Pages Sent _____

RE: Reader Response

From: Name _____

Company _____

Address _____

City / State / ZIP / Country _____

Telephone: (_____) _____ - _____ FAX: (_____) _____ - _____

Application (optional):

Would you like a reply?____Y ____N

Device: 25AA256/25LC256 Literature Number: DS21822C

Questions:

1. What are the best features of this document?

_____

_____

2. How does this document meet your hardware and software development needs?

_____

_____

3. Do you find the organization of this document easy to follow? If not, why?

_____

_____

4. What additions to the document do you think would enhance the structure and subject?

_____

_____

5. What deletions from the document could be made without affecting the overall usefulness?

_____

_____

6. Is there any incorrect or misleading information (what and where)?

_____

_____

7. How would you improve this document?

_____

_____

 © 2003 Microchip Technology Inc.

## PRODUCT IDENTIFICATION SYSTEM

To order or obtain information, e.g., on pricing or delivery, refer to the factory or the listed sales office.

| PART NO. | X | – | X | /XX | X |
|---|---|---|---|---|---|
| Device | Tape & Reel | | Temp Range | Package | Lead Finish |

| | | | |
|---|---|---|---|
| Device | 25AA256 | | 256k-bit, 1.8V, 64-Byte Page, SPI Serial EEPROM |
| | 25LC256 | | 256k-bit, 2.5V, 64-Byte Page, SPI Serial EEPROM |
| Tape & Reel | Blank | = | Standard packaging (tube) |
| | T | = | Tape & Reel |
| Temperature Range | I | = | -40°C to+85°C |
| | E | = | -40°C to+125°C |
| Package | MF | = | Micro Lead Frame (6 x 5 mm body), 8-lead |
| | P | = | Plastic DIP (300 mil body), 8-lead |
| | SN | = | Plastic SOIC (150 mil body), 8-lead |
| | ST | = | TSSOP, 8-lead |
| Lead Finish | Blank | = | Standard 63% / 37% Sn/Pb |
| | G | = | Matte Tin (Pure Sn) |

**Examples:**

a) 25AA256-I/STG = 256k-bit, 1.8V Serial EEPROM, Industrial temp., TSSOP package, Pb-free

b) 25AA256T-I/SN = 256k-bit, 1.8V Serial EEPROM, Industrial temp., Tape & Reel, SOIC package

c) 25AA256T-I/ST = 256k-bit, 1.8V Serial EEPROM, Industrial temp., Tape & Reel, TSSOP package

d) 25LC256-I/STG = 256k-bit, 2.5V Serial EEPROM, Industrial temp., TSSOP package, Pb-free

e) 25LC256-I/P = 256k-bit, 2.5V Serial EEPROM, Industrial temp., P-DIP package

f) 25LC256T-E/ST = 256k-bit, 2.5V Serial EEPROM, Extended temp., Tape & Reel, TSSOP package

## Sales and Support

**Data Sheets**
Products supported by a preliminary Data Sheet may have an errata sheet describing minor operational differences and recommended workarounds. To determine if an errata sheet exists for a particular device, please contact one of the following:

1. Your local Microchip sales office
2. The Microchip Corporate Literature Center U.S. FAX: (480) 792-7277
3. The Microchip Worldwide Site (www.microchip.com)

Please specify which device, revision of silicon and Data Sheet (include Literature #) you are using.

**New Customer Notification System**
Register on our web site (www.microchip.com/cn) to receive the most current information on our products.

**NOTES:**

 © 2003 Microchip Technology Inc.

**Note the following details of the code protection feature on Microchip devices:**

- Microchip products meet the specification contained in their particular Microchip Data Sheet.
- Microchip believes that its family of products is one of the most secure families of its kind on the market today, when used in the intended manner and under normal conditions.
- There are dishonest and possibly illegal methods used to breach the code protection feature. All of these methods, to our knowledge, require using the Microchip products in a manner outside the operating specifications contained in Microchip's Data Sheets. Most likely, the person doing so is engaged in theft of intellectual property.
- Microchip is willing to work with the customer who is concerned about the integrity of their code.
- Neither Microchip nor any other semiconductor manufacturer can guarantee the security of their code. Code protection does not mean that we are guaranteeing the product as “unbreakable.”

Code protection is constantly evolving. We at Microchip are committed to continuously improving the code protection features of our products. Attempts to break microchip’s code protection feature may be a violation of the Digital Millennium Copyright Act. If such acts allow unauthorized access to your software or other copyrighted work, you may have a right to sue for relief under that Act.

Information contained in this publication regarding device applications and the like is intended through suggestion only and may be superseded by updates. It is your responsibility to ensure that your application meets with your specifications. No representation or warranty is given and no liability is assumed by Microchip Technology Incorporated with respect to the accuracy or use of such information, or infringement of patents or other intellectual property rights arising from such use or otherwise. Use of Microchip’s products as critical components in life support systems is not authorized except with express written approval by Microchip. No licenses are conveyed, implicitly or otherwise, under any intellectual property rights.

**Trademarks**

The Microchip name and logo, the Microchip logo, Accuron, dsPIC, KEELOQ, MPLAB, PIC, PICmicro, PICSTART, PRO MATE and PowerSmart are registered trademarks of Microchip Technology Incorporated in the U.S.A. and other countries.

AmpLab, FilterLab, microID, MXDEV, MXLAB, PICMASTER, SEEVAL and The Embedded Control Solutions Company are registered trademarks of Microchip Technology Incorporated in the U.S.A.

Application Maestro, dsPICDEM, dsPICDEM.net, ECAN, ECONOMONITOR, FanSense, FlexROM, fuzzyLAB, In-Circuit Serial Programming, ICSP, ICEPIC, microPort, Migratable Memory, MPASM, MPLIB, MPLINK, MPSIM, PICkit, PICDEM, PICDEM.net, PowerCal, PowerInfo, PowerMate, PowerTool, rfLAB, rfPIC, Select Mode, SmartSensor, SmartShunt, SmartTel and Total Endurance are trademarks of Microchip Technology Incorporated in the U.S.A. and other countries.

Serialized Quick Turn Programming (SQTP) is a service mark of Microchip Technology Incorporated in the U.S.A.

All other trademarks mentioned herein are property of their respective companies.

© 2003, Microchip Technology Incorporated, Printed in the U.S.A., All Rights Reserved.

Printed on recycled paper.

DNV Certification, Inc. USA
ANSI-RAB QMS ACCREDITED
DNV
DNV MSC The Netherlands Accredited by the RvA
ISO 9001 / QS-9000 REGISTERED FIRM

*Microchip received QS-9000 quality system certification for its worldwide headquarters, design and wafer fabrication facilities in Chandler and Tempe, Arizona in July 1999 and Mountain View, California in March 2002. The Company’s quality system processes and procedures are QS-9000 compliant for its PICmicro® 8-bit MCUs, KEELOQ® code hopping devices, Serial EEPROMs, microperipherals, non-volatile memory and analog products. In addition, Microchip’s quality system for the design and manufacture of development systems is ISO 9001 certified.*

# WORLDWIDE SALES AND SERVICE

## AMERICAS

**Corporate Office**
2355 West Chandler Blvd.
Chandler, AZ 85224-6199
Tel: 480-792-7200
Fax: 480-792-7277
Technical Support: 480-792-7627
Web Address: http://www.microchip.com

**Atlanta**
3780 Mansell Road, Suite 130
Alpharetta, GA 30022
Tel: 770-640-0034
Fax: 770-640-0307

**Boston**
2 Lan Drive, Suite 120
Westford, MA 01886
Tel: 978-692-3848
Fax: 978-692-3821

**Chicago**
333 Pierce Road, Suite 180
Itasca, IL 60143
Tel: 630-285-0071
Fax: 630-285-0075

**Dallas**
4570 Westgrove Drive, Suite 160
Addison, TX 75001
Tel: 972-818-7423
Fax: 972-818-2924

**Detroit**
Tri-Atria Office Building
32255 Northwestern Highway, Suite 190
Farmington Hills, MI 48334
Tel: 248-538-2250
Fax: 248-538-2260

**Kokomo**
2767 S. Albright Road
Kokomo, IN 46902
Tel: 765-864-8360
Fax: 765-864-8387

**Los Angeles**
18201 Von Karman, Suite 1090
Irvine, CA 92612
Tel: 949-263-1888
Fax: 949-263-1338

**Phoenix**
2355 West Chandler Blvd.
Chandler, AZ 85224-6199
Tel: 480-792-7966
Fax: 480-792-4338

**San Jose**
2107 North First Street, Suite 590
San Jose, CA 95131
Tel: 408-436-7950
Fax: 408-436-7955

**Toronto**
6285 Northam Drive, Suite 108
Mississauga, Ontario L4V 1X5, Canada
Tel: 905-673-0699
Fax: 905-673-6509

## ASIA/PACIFIC

**Australia**
Suite 22, 41 Rawson Street
Epping 2121, NSW
Australia
Tel: 61-2-9868-6733
Fax: 61-2-9868-6755

**China - Beijing**
Unit 915
Bei Hai Wan Tai Bldg.
No. 6 Chaoyangmen Beidajie
Beijing, 100027, No. China
Tel: 86-10-85282100
Fax: 86-10-85282104

**China - Chengdu**
Rm. 2401-2402, 24th Floor,
Ming Xing Financial Tower
No. 88 TIDU Street
Chengdu 610016, China
Tel: 86-28-86766200
Fax: 86-28-86766599

**China - Fuzhou**
Unit 28F, World Trade Plaza
No. 71 Wusi Road
Fuzhou 350001, China
Tel: 86-591-7503506
Fax: 86-591-7503521

**China - Hong Kong SAR**
Unit 901-6, Tower 2, Metroplaza
223 Hing Fong Road
Kwai Fong, N.T., Hong Kong
Tel: 852-2401-1200
Fax: 852-2401-3431

**China - Shanghai**
Room 701, Bldg. B
Far East International Plaza
No. 317 Xian Xia Road
Shanghai, 200051
Tel: 86-21-6275-5700
Fax: 86-21-6275-5060

**China - Shenzhen**
Rm. 1812, 18/F, Building A, United Plaza
No. 5022 Binhe Road, Futian District
Shenzhen 518033, China
Tel: 86-755-82901380
Fax: 86-755-8295-1393

**China - Shunde**
Room 401, Hongjian Building
No. 2 Fengxiangnan Road, Ronggui Town
Shunde City, Guangdong 528303, China
Tel: 86-765-8395507 Fax: 86-765-8395571

**China - Qingdao**
Rm. B505A, Fullhope Plaza,
No. 12 Hong Kong Central Rd.
Qingdao 266071, China
Tel: 86-532-5027355 Fax: 86-532-5027205

**India**
Divyasree Chambers
1 Floor, Wing A (A3/A4)
No. 11, O'Shaugnessey Road
Bangalore, 560 025, India
Tel: 91-80-2290061 Fax: 91-80-2290062

**Japan**
Benex S-1 6F
3-18-20, Shinyokohama
Kohoku-Ku, Yokohama-shi
Kanagawa, 222-0033, Japan
Tel: 81-45-471- 6166 Fax: 81-45-471-6122

**Korea**
168-1, Youngbo Bldg. 3 Floor
Samsung-Dong, Kangnam-Ku
Seoul, Korea 135-882
Tel: 82-2-554-7200 Fax: 82-2-558-5932 or
82-2-558-5934

**Singapore**
200 Middle Road
#07-02 Prime Centre
Singapore, 188980
Tel: 65-6334-8870 Fax: 65-6334-8850

**Taiwan**
Kaohsiung Branch
30F - 1 No. 8
Min Chuan 2nd Road
Kaohsiung 806, Taiwan
Tel: 886-7-536-4818
Fax: 886-7-536-4803

**Taiwan**
Taiwan Branch
11F-3, No. 207
Tung Hua North Road
Taipei, 105, Taiwan
Tel: 886-2-2717-7175 Fax: 886-2-2545-0139

## EUROPE

**Austria**
Durisolstrasse 2
A-4600 Wels
Austria
Tel: 43-7242-2244-399
Fax: 43-7242-2244-393

**Denmark**
Regus Business Centre
Lautrup hoj 1-3
Ballerup DK-2750 Denmark
Tel: 45-4420-9895 Fax: 45-4420-9910

**France**
Parc d'Activite du Moulin de Massy
43 Rue du Saule Trapu
Batiment A - ler Etage
91300 Massy, France
Tel: 33-1-69-53-63-20
Fax: 33-1-69-30-90-79

**Germany**
Steinheilstrasse 10
D-85737 Ismaning, Germany
Tel: 49-89-627-144-0
Fax: 49-89-627-144-44

**Italy**
Via Quasimodo, 12
20025 Legnano (MI)
Milan, Italy
Tel: 39-0331-742611
Fax: 39-0331-466781

**Netherlands**
P. A. De Biesbosch 14
NL-5152 SC Drunen, Netherlands
Tel: 31-416-690399
Fax: 31-416-690340

**United Kingdom**
505 Eskdale Road
Winnersh Triangle
Wokingham
Berkshire, England RG41 5TU
Tel: 44-118-921-5869
Fax: 44-118-921-5820

07/28/03


© 2003 Microchip Technology Inc.