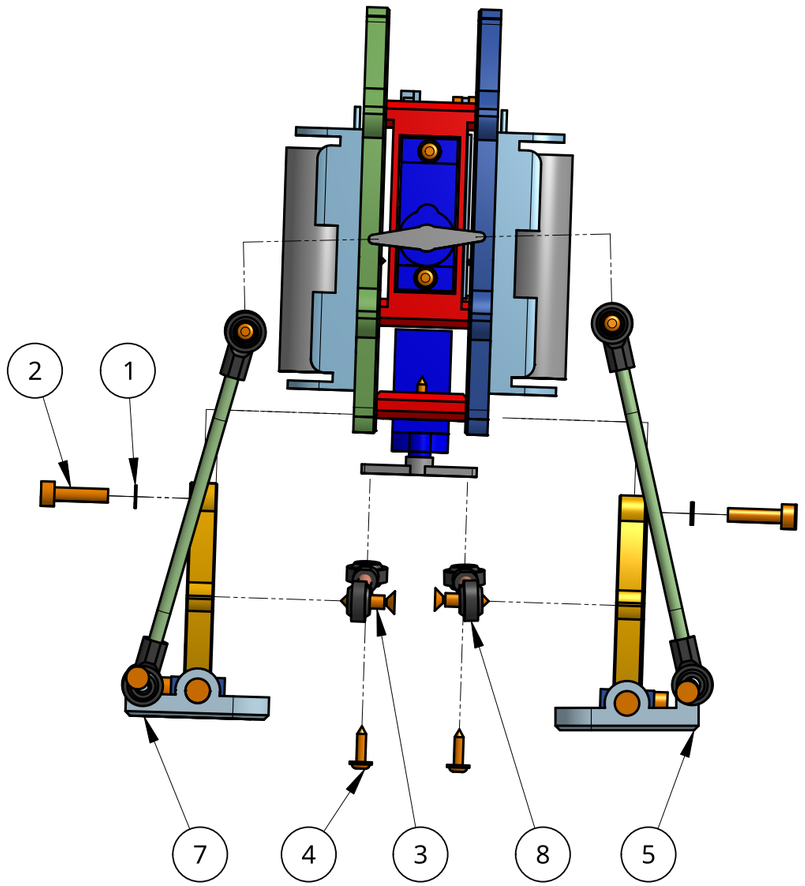

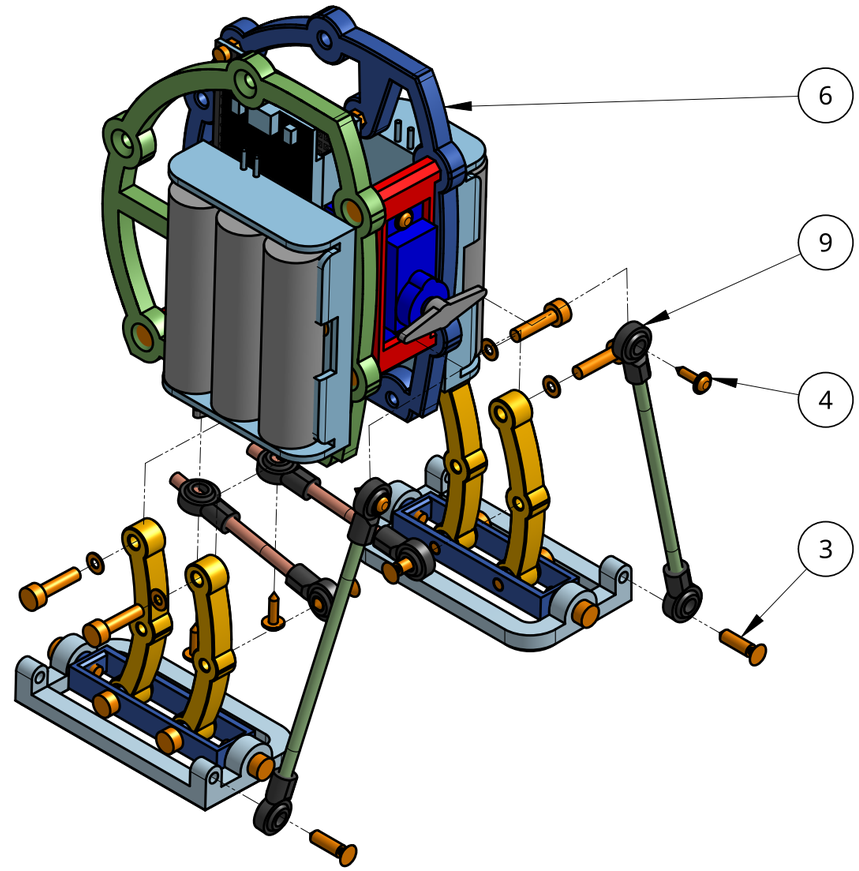

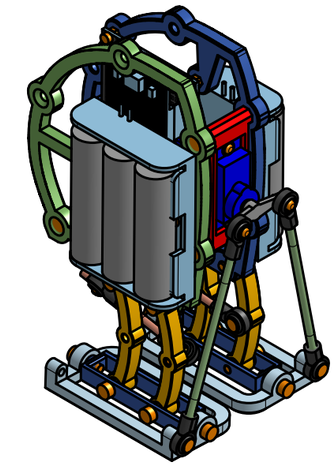

SCALE 1:2

Item	Quantity	Vendor	Part number	Name
1	4	Amazon	B07H4MG7TC M2	FW_M2
2	4	Amazon	B07H4MG7TC M3x12	SHCS_M3x12
3	4	Amazon	B0BCFXLYK5 M3x12	SelfTappingFHMS-M3x12
4	4	Amazon	B07L2SF3R4 Screw	SelfTapScrewF_M2X8
5	1	CUSTOM	BPD-300 LegL	Leg-Left
6	1	CUSTOM	BPD-200 Body	Body
7	1	CUSTOM	BPD-400 LegR	Leg-Right
8	2	CUSTOM	BPD-500B RodS	Rod-Short
9	2	CUSTOM	BPD-500A RodL	Rod-Long

UNLESS OTHERWISE SPECIFIED, DIMENSIONS ARE IN MILLIMETERS

ANGULAR = ± °

SURFACE FINISH

DO NOT SCALE DRAWING

BREAK ALL SHARP EDGES AND REMOVE BURRS

THIRD ANGLE PROJECTION

	NAME	DATE
DRAWN	GUILHERME ARAMIZO RIBEIRO	12/18/2023
CHECKED		
APPROVED		

MATERIAL

FINISH

TITLE Biped Robot

SIZE B

DWG NO. BPD-100

REV. B

SCALE 3:4

WEIGHT

SHEET 1 of 1