FINAL DESIGN REPORT

Furuta Pendulum

Abstract

The Rotary Inverted Pendulum, also known as the Furuta Pendulum, is a mechanical robot that uses control theory to swing a pendulum upright and balance it. The Robotics Control Laboratory at Boise State University commissioned our senior design group to design the mechanical systems involved in the pendulum.

Drew Keller
James Jones
Michael Gareau
Zachary Pinkley
Quinn Le

Table of Contents

Executive Summary: 2

Problem Statement: 3

Stakeholder Analysis: 4

Benchmarking / Market Research: 5

Needs: 12

Standards & Regulations: 14

Background & Problem Analysis: 15

Specifications: 16

Design Description: 18

Design Analysis: 27

Design Testing: 28

Bill of Material/Budget: 29

Schedule: 32

Social Impact and Ethical Analysis 33

Conclusions and Recommendations: 34

References: 35

Appendices: 36

Executive Summary:

Boise State University's Robot Control Laboratory is requesting our team to design an inverted pendulum called a Furuta pendulum. The pendulum must rotate a full 360 degrees indefinitely without the wires from the electronics getting tangled from the rotation or the assistance of gearboxes to provide additional torque to move the pendulum. The apparatus should have low friction and tight tolerances to ensure that the links rotate freely without flexing when torque from the motor is applied. It is also important that there is easy access to components of the pendulum, so that the Robot Control Laboratory can easily replace parts or when they need to perform maintenance. The pendulum should not be bigger than 31x31x56 centimeters (LxWxH) and weigh less than 2 kilograms, not including the rest of the frame, while not exceeding a total cost of $1,000.00.

The first step in designing the pendulum was to research other designs that were available on the market. While researching it was determined that a lot of the pendulums available don't meet some of the specifications that were requested by the sponsor. Despite this, many of the available pendulums do excel in other regards. The pendulum design created by this team will implement the strengths of the other marketable pendulums while still meeting the specifications listed in the Design Report.

The pendulum has three main parts, the Control Algorithm[1], Electrical System, and Mechanical System. The Algorithm is provided to allow an analysis of the system to ensure every function from the Mechanical and Electrical sections will integrate properly with the code. A decision matrix was utilized to help establish the design by comparing the strengths of other designs in one column and concepts the team came up with to meet the sponsor's requests. The primary focus when designing this system was to ensure the pendulum could spin a full 360 degrees around the motor's axis without tangling and breaking any wires. Another pillar of the design was the ability to easily take it apart. It was decided that the design would have a removable top and outer frame to make it easier to both fabricate the pendulum and to perform maintenance on it. The resulting product will allow for 360 rotation and fulfill all of the design requirements requested by the sponsor.

By February 7 2022, all raw materials and parts of the Pendulum should have been obtained and manufacturing begun. A working prototype should be obtained by March 18 and the final product should be completed by May. An issue in the product ordering process may cause delays, and as such purchasing will begin as soon as possible to reduce the risk of setbacks.

The design report contains in-depth information about strengths and weaknesses of designs available on the market, needs/specifications requested by the sponsor, and bill of materials with cost breakdown. They also contain the decision making and analysis of the design.

[1] Control Algorithms: A type of logic programmed into a controller to analyze the error between a measured value and a setpoint

Problem Statement:

Create a compact, low friction Furuta pendulum to test control algorithms in Dr. Satici's Robotics Control Laboratory. Furuta pendulums are 2-link systems with a motor attached to the first link with the second link free to rotate perpendicular to the first. In order to work properly, both links must have a full 360 degree range of motion and be able to spin indefinitely without tangling the connecting wires.

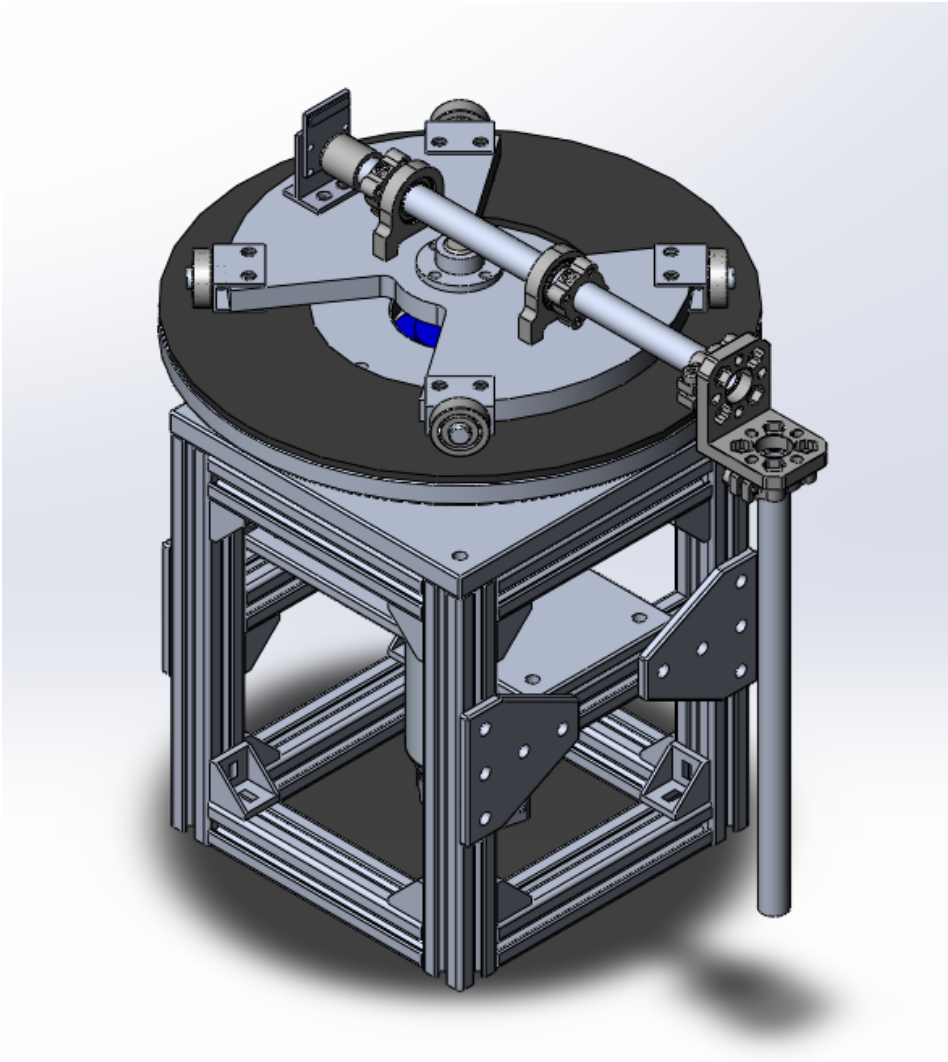

Figure 1: Furuta Pendulum System

This figure is representative of a fully functional Furuta Pendulum and will serve as a visual guide showing what part of the pendulum is being referred to when Link 1, Link 2, Frame, etc is mentioned in the report.

Stakeholder Analysis:

Ranking system is rated on a 1- 5 scale with 1 being high priority and 5 being minimal priority.

- **Control Algorithm** **Rank 1**
  - **Aspects of the Solution That Help**
    - Design will help test the Control Algorithm
  - **Aspects of the Solution that Hinder**
    - Control Algorithm may need to be adjusted to work with the design
- **Customer** **Rank 2**
  - **Aspects of the Solution That Help**
    - A complete usable design will allow for marketing and research funding
    - Small design that reduces the danger, reducing the threat of liability
  - **Aspects of the Solution that Hinder**
    - A small compact design generally leads to more expensive parts
- **Operator** **Rank 2**
  - **Aspects of the Solution That Help**
    - Small design reduces the chance of injury or breakage
    - Design is meant to be easy to use
  - **Aspects of the Solution that Hinder**
    - Design may be relatively heavy due to the use of metal
- **Manufacturer** **Rank 3**
  - **Aspects of the Solution That Help**
    - A design using materials that are easy to work with will be beneficial for the manufacturing process
  - **Aspects of the Solution that Hinder**
    - The design may require techniques or skills that the manufacturer does not have available
    - Small designs are harder to make and more complex

Benchmarking / Market Research:

Item Name	Pros	Cons
Ben Katz Furuta Pendulum Link **Image of Item** 	● Compact ● Aesthetic ● High precision and good performance ● Instructions on how to build it is online	● All Custom Parts ● So compact that there would be size restraints on everything
While this design is the most aesthetically pleasing and compact pendulum the team found on the market, it would be, by far, the most challenging one to recreate. Every component is custom made, which would also make it hard to perform maintenance on.		

Item Name	Pros	Cons
Rotary Inverted Pendulum Link **Image of Item** 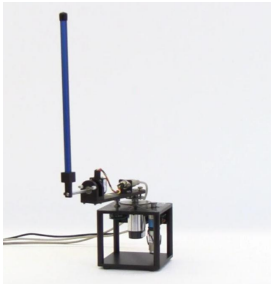	● Lots of room, no huge size restraints ● Short horizontal link	● Links can't rotate a full 360 ● Wires are exposed/not hidden
This furuta pendulum is a very good baseline pendulum to base the design off of. Components are easily accessed for maintenance and adjustments. There are still many areas that can be improved upon, and there are differences between this design and the requirements that have been given to us.		

Item Name	Pros	Cons
Rotary Inverted Pendulum Link	● Compact ● Easier to assemble compared to other designs	● Not aesthetically pleasing to look at ● Wires are exposed ● Not sturdy
Image of Item 		
This pendulum would probably be the easiest to recreate. It is compact, but because the base is just tape rolls, it could very easily be enlarged, eliminating any size constraints.		

Item Name	Pros	Cons
Quanser Qube - Servo 2 Link	● The links can be easily removed and replaced with other attachments ● Very compact and lightweight ● Low inertia for the links due to encoders and other electronics being placed nearer to the axis of rotation	● Modular nature gives more room for error and backlash ● It cannot rotate a full 360 degrees (only 180)
Image of Item 		
In this design, link 1 and link 2 are rigidly attached to each other with an immovable joint. The rotation of link 2 is accomplished because link 1 can rotate about both the vertical and horizontal directions. This is similar to the Ben Kratz pendulum.		

Item Name	Pros	Cons
Taidacent Hollow Slip Ring Link	• Gold-gold contacts points ensure stability and service life • low torque • smooth rotation • Has multiple options for number of wires	• Less compact than other options • Max Speed: 250 RPM (Potential Con) • Limited mounting point
Image of Item 		
Allows link to rotates a full 360 degrees without twisting the wires attached		

Item Name	Pros	Cons
Taidacent Small Slip Rings Link	• Compact structure • Various designs to allow for 6-56 Wires • Has multiple options for number of wires	• Max Speed: 250 RPM (Potential Con) • Heavier than the other option • Limited mounting point
Image of Item 		
Allows link to rotates a full 360 degrees without twisting the wires attached		

Item Name	Pros	Cons
T-Slotted Framing Rails Link **Image of Item** 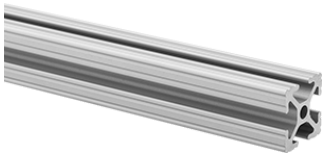	● Aluminum (lightweight) ● Easy to install attachments ● Easy to machine ● Less machining ● Cheap ● Less aesthetic	● Unknown how stable and sturdy it is. ● Probably not a good choice for the vertical link.
This item can be used for the horizontal link. The rails would allow the sensors and other components to be easily attached to the link, leading to less machining.		

Item Name	Pros	Cons
Ultra-Strength Lightweight Carbon Fiber Square Tubes Link 	● High strength ● High stiffness ● Lightweight ● Aesthetic ● Can be used for both vertical and horizontal links	● Harder to machine ● More expensive
Carbon fiber is lighter than aluminum and stronger than steel. It would work great for both the vertical and horizontal link because of this.		

Item Name	Pros	Cons
Tight-Tolerance 6061 Al Rod	● Strong	● No way to easily

Link	• Lightweight • Easy to machine • Precision ground to offer tight tolerances	attach components to the rod
This material would be lighter than the T-slotted framing rails listed above and could easily rotate due to the cylindrical shape. However, this material would limit the design of the pendulum to follow only the Ben Kratz or the Qube pendulul designs because it would be challenging to make attachments to the rod itself.		

Item Name Koyo Incremental Encoder Link **Image of Item**	**Pros** • 2-In Diameter • 1024 PPR • 5000 RPM • Aluminum Housing • $124.00, Relatively Cheap for Encoders • 6.5ft/2m cord length	**Cons** • Line Driver (Differential) output type
Line Driver incremental encoder made of aluminum housing that can be used to determine the position of the vertical limb.		

Item Name	Pros	Cons
Totem Pole Output Type, Encoder Link	• Small • High Max RPM	• Only has a resolution of 360 PPR[2] • High price for a low resolution ($203)
Image of Item 		
Not much information is offered on this encoder. It has a lower resolution at only 360 PPR. It has a very small cable and plug, however, which would make it easy to fit into the pendulum.		

Item Name	Pros	Cons
Aideepen AB 2 Phase Incremental Rotary Encoder Link	• VERY cheap ($16.99) • 5000 RPM • Small Frame	• 600 PPR • Long Cord (1.5m) • Stainless Steel Frame • Lower quality than other
Image of Item 		
This encoder seems to have similar specs to more expensive units, but has a lower PPR. The long cord will require it to be shortened to fit on the device. However, due to how cheap this unit is, it may be less functional than other more expensive units.		

[2] PPR: Pulses Per Revolution, one way to measure the accuracy of an encoder

Item Name HEDL-5540#A11 Encoder Link	Pros	Cons
Image of Item 	● Provided by sponsor ● Same as the encoder used on the motor ● Small size	● Smaller resolution than other options (500 CPR[3])
This encoder provides a lot of simplicity to the design because it is the same encoder that is already attached to the motor given to us. It also helps save on budget while still maintaining a decent resolution.		

[3] CPR: Counts Per Revolution, one way to measure the accuracy of an encoder

Needs:

Need #	Description of need	Justification	Required Y/N
1	Both links should be able to rotate a full 360 degrees	Requirement given by sponsor	**Y**
2	No gearboxes used	Requirement given by sponsor	**Y**
3	Minimal friction	Needed to ensure balance link can restabilize itself upwards	**Y**
4	The link being balanced should be lightweight	Needed to reduce stress on the horizontal link and motor	**Y**
5	High tolerances	Necessary for accurate measurements and for the pendulum to work at its peak performance	**Y**
6	Center of mass should be as close to the motor as possible	Allows horizontal link to rotate smoothly	**Y**
7	Must interface with the code provided by the Robotics Control Laboratory	This is the code that the device is testing.	**Y**
8	The Furuta system must be able to repeatedly balance the pendulum	Requirement given by sponsor	**Y**
9	Two high resolution encoders	To determine the position and velocity of each link	**Y**
10	The links must not touch or tangle with the wires at anypoint during rotation	This could damage the wires and make it so the links can't rotate	**Y**
11	Must use motor supplied to us	Requirement given by Sponsor	**Y**
12	Must not use more than $1000 for build	This is the budget set by the Sponsor	**Y**
13	Parts must be machined in house when possible	To save money on the budget	**Y**
14	Easy access to inside of pendulum	To allow for fixing and maintenance	**Y**

15	Non-custom electronics	Non-custom parts allow for ease of maintenance and replacement of essential components should they break	**Y**
16	Holes must be machined on mill	For accurate and straight holes which will improve strength and functionality	**N**
17	Standard size bolts	Helps to simplify design	**N**
18	Looks professional and appealing	Project will be shown off to a variety of people	**N**
19	Overall Design Compact/lightweight	The project should be able to be moved by hand	**N**

Standards & Regulations:

Due to the fact that the Robotics Control Laboratory has no chemical hazards and minimal mechanical hazards, the focus will be on the standards and regulations around the electrical side of the project. The following codes and regulations will establish how the design is going to be wired. This ensures that when the clients work on troubleshooting the pendulum, they will have an understanding of the system's wiring practices. These regulations will be followed to increase the safety factor of the Furuta System.

Wire Color Codes

- DC Power
    - Positive Power wires should be red.
    - Negative Power wires should be black.
    - Ground wires should be gray/white.
- AC Power
    - Phase 1 - Phase 1 wiring should be black.
    - Phase 2 - Phase 2 wiring should be red.
    - Phase 3 - Phase 3 wiring should be blue.
    - Neutral - Neutral wiring should be white.
    - Ground - Ground wiring can be green or green with a yellow stripe.

Wiring Integrity - NFPA 110.7

- Wiring installations should not have any short circuits, ground faults, or any connections to ground other than as required.

Torque Motors - NFPA 430.6 (B)

- The rated current shall be locked-rotor current for the motor.

Background & Problem Analysis:

Most Furuta Systems on the market today only rotate up to 180 degrees around their frame. The sponsor's request is to create a Furuta System that can rotate a full 360 degrees around the frame. To ensure smooth operation of the Furuta System there needs to be a defined nominal operating torque. The weight and dimensions of the Furuta System must also be managed so the center of gravity is located near the motor's axis of rotation to ensure smooth rotation.

There is a motor located inside of the frame to rotate Link 1 a full 360 degrees around the frame to balance Link 2 vertically. To allow for 360 degree rotation, the wiring for the magnetic encoder is connected to a slip ring. The slip ring will allow for rotation without the wires twisting upon themselves. The motor supplied is a RE 40 Ø40 mm, graphite brushes, 150 Watt motor to use in the frame, limited to 250 RPM to not break the slip ring. The motor has a nominal torque of 187 mN-m and a stall torque of 2560 mN-m.

The governing equations are derived with the following assumptions:

- All functions and vector functions are sufficiently smooth
- Origins is at $x = 0$, $f(0) = 0$, $g(0) \neq 0$
- The motor shaft and Links 1 and 2 are assumed to be rigidly coupled and infinitely stiff
- The coordinate axes of Links 1 and 2 are the principal axes such that the inertia tensors are diagonal
- The motor rotor inertia is assumed to negligible (term can be added to moment of inertia of Link 1 further into the design process)

The governing equations and nomenclature are located in Appendix A.

Specifications:

Spec. Item	Related Need #	Specification	Justification and Reference	Required Y/N
A	2,11	A RE 40 Ø40 mm, Graphite Brushes, 150 Watt motor must be used without a gearbox	Requirement given by sponsor	Y
B	9,15,7	HEDL-5540#A11 Optical Encoder and Magnetic Encoder will be used	Requirement given by sponsor	Y
C	8	The Furuta System must be able to repeatedly balance the pendulum for up to 10 years	Requirement given by sponsor	Y
D	12,15	Product is manufactured for a $1000 or less	Requirement given by sponsor	Y
E	1,10,8	Link 1's rotational Speed can not exceed 250 RPM	Slip-Ring Constraint: Benchmarking	Y
F	11	Power source must supply at least 48V	Motor constraint	Y
G	2,6,11	The continuous operating torque should not exceed 187 mN-m	Motor constraint	Y
G1	2,6,11	Maximum torque should not exceed more than 2560 mN-m	Motor constraint	Y
H1	1,6,10	Link 1 needs to be dimensioned so it is able to rotate a full 360 degrees around the vertical axis without hitting anything	Avoid link 2 striking the frame	Y
H2	1,6,10	Link 2 needs to be dimensioned so it is able to rotate a full 360 degrees around the horizontal axis without hitting anything	Avoid link 2 striking the surface the Furuta System is sitting on	Y
H3	3	Low friction bearings need to be used to facilitate the rotations of the pendulum	Ensures a low friction in the pendulum is maintained	Y
I1	3,5,7,16, 17	High tolerance parts to be machined to within ±0.254mm (0.01in)	Necessary for accurate measurements	Y

I2	13,16,15	Non-standard parts and holes should be machined in-house, and electronics purchased when necessary.	To save money on the budget with machining, and to save time on electronics	Y
J1	6	Center of Mass of Furuta System should be no more than 5 cm from the motor's axis of rotation	Allows for smooth rotation	Y
J2	13,14,19	Frame should not exceed 31 cm x 31 cm x 46 cm (LxWxH) dimensions	Relatively small but not too small that it becomes difficult to maintain/repair	N
J3	4,19	Furuta System should not exceed any more than 10kg, and the pendulum should not exceed more than 25% of the total weight of the Furuta System	Suggested by sponsor	N
K	5,16,17,18	Standard (metric) bolts will be used whenever possible	Contributes to ease of manufacturing	N
L	1,10,14,18	The internal electronics of the pendulum should not be exposed and viewable except by a maintenance hatch	Contributes to professional aesthetic and ensures wires do not get tangles in the links	N
M	18	Furuta System aesthetic appeal is approved by sponsor	Contributes to the appeal of the finished product	N
N	13,19	Frame is to be made from aluminum	Light weight, easy to machine, and cheap	N

Design Description:

The Furuta Pendulum has three main parts of the project. There is the control algorithm (provided by the sponsor), the electrical system, and the mechanical system. **Figure 2** shows a system block diagram expanding on these three fundamental components of the Furuta Pendulum System. The team has been tasked by the sponsor to focus primarily on the mechanical system for the design.

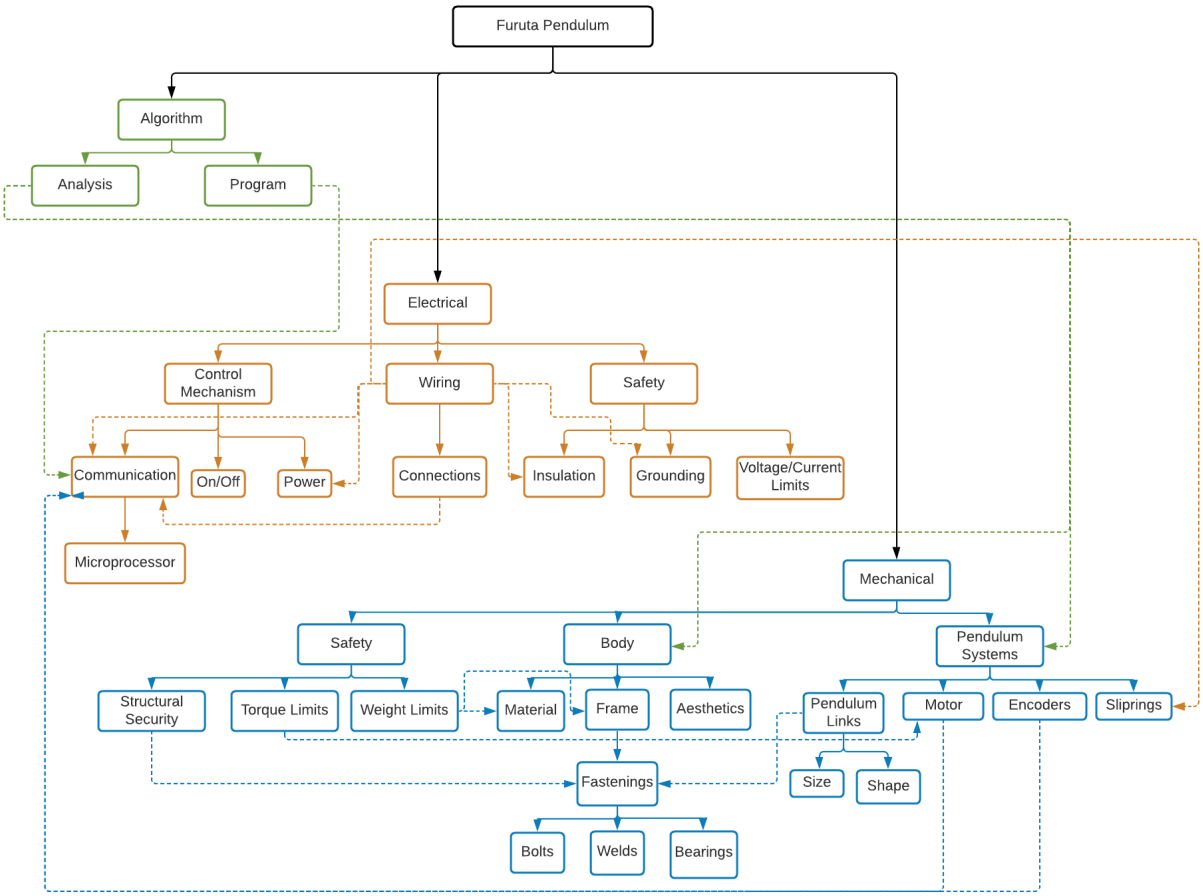

Figure 2: Furuta Pendulum System Block Diagram

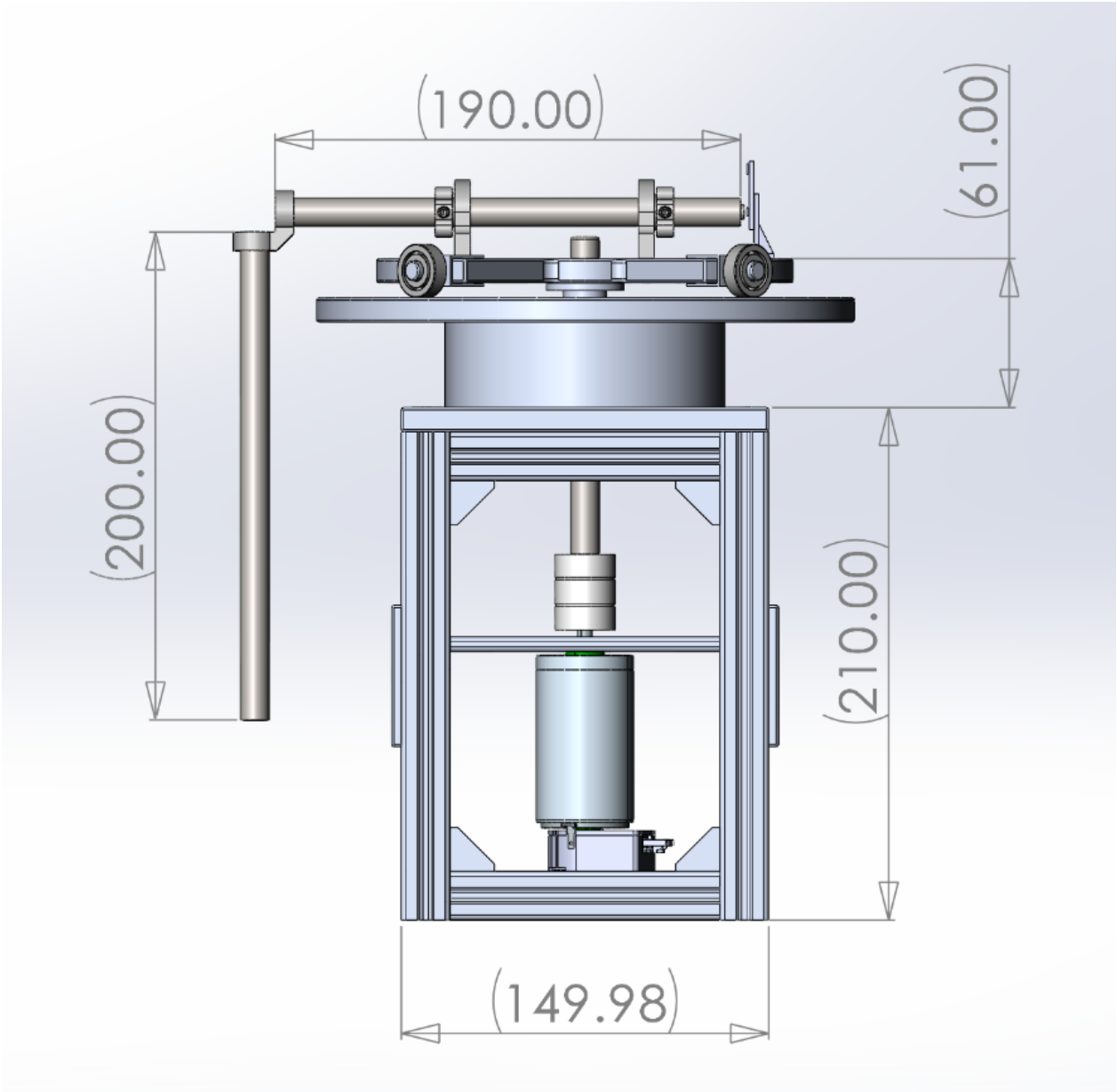

Figure 3: Furuta Pendulum Side View with Dimensions (mm)

The team opted for a spinning disk Furuta pendulum attached to a rectangular frame for the design as seen in **Figure 3**. The primary focus when designing this system was to ensure the pendulum could spin 360 degrees around the Motor's axis without tangling and breaking any wires. Another pillar of the design was to make the pendulum easy to perform maintenance. The team's current design meets this criteria by having the frame be open and easily accessible.

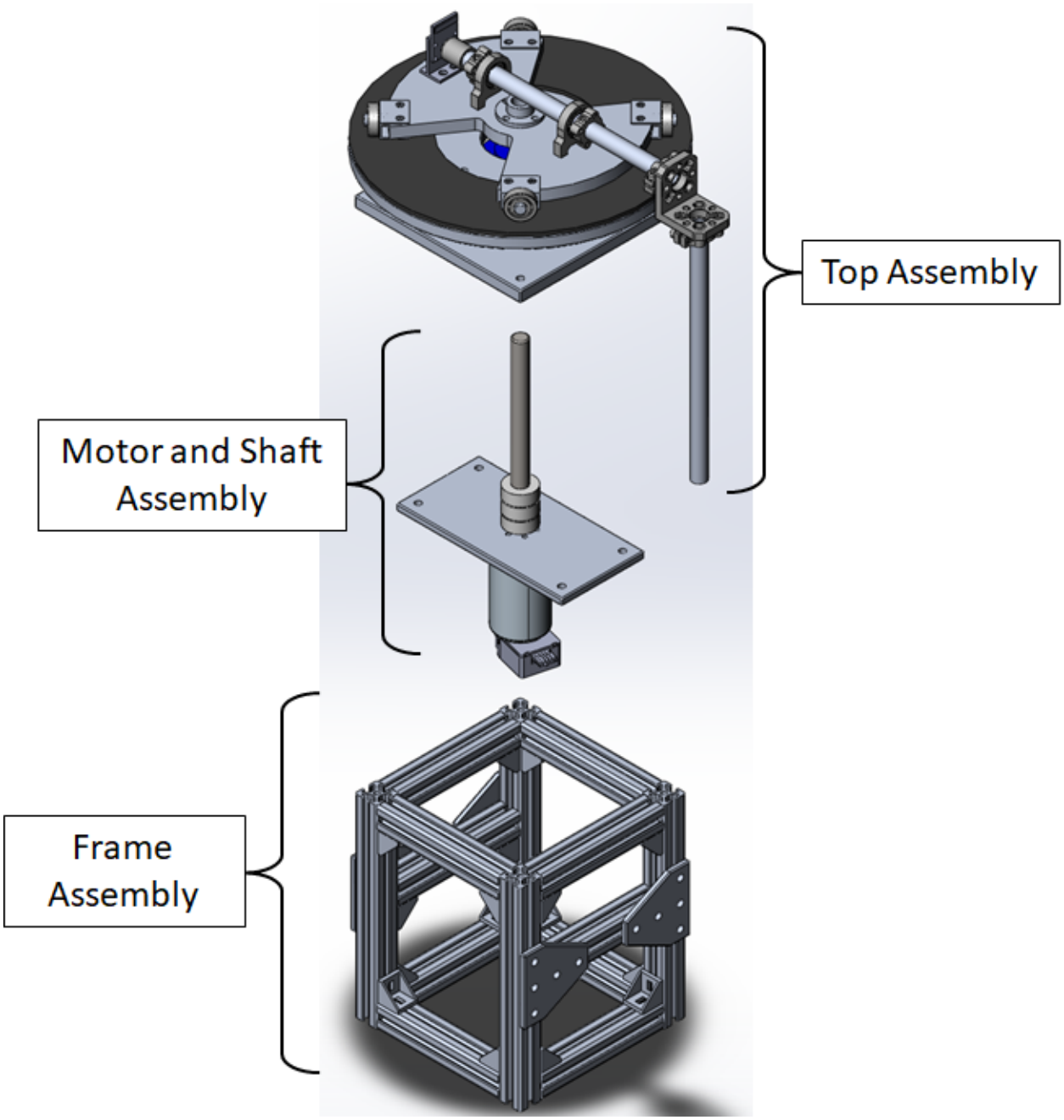

Figure 4: Furuta Pendulum System - Exploded View

The Furuta pendulum depicted in **Figure 4** is split into three subsystems. The three subsystems are depicted below in **Figures 5-10** in exploded views to provide more insight to their composition.

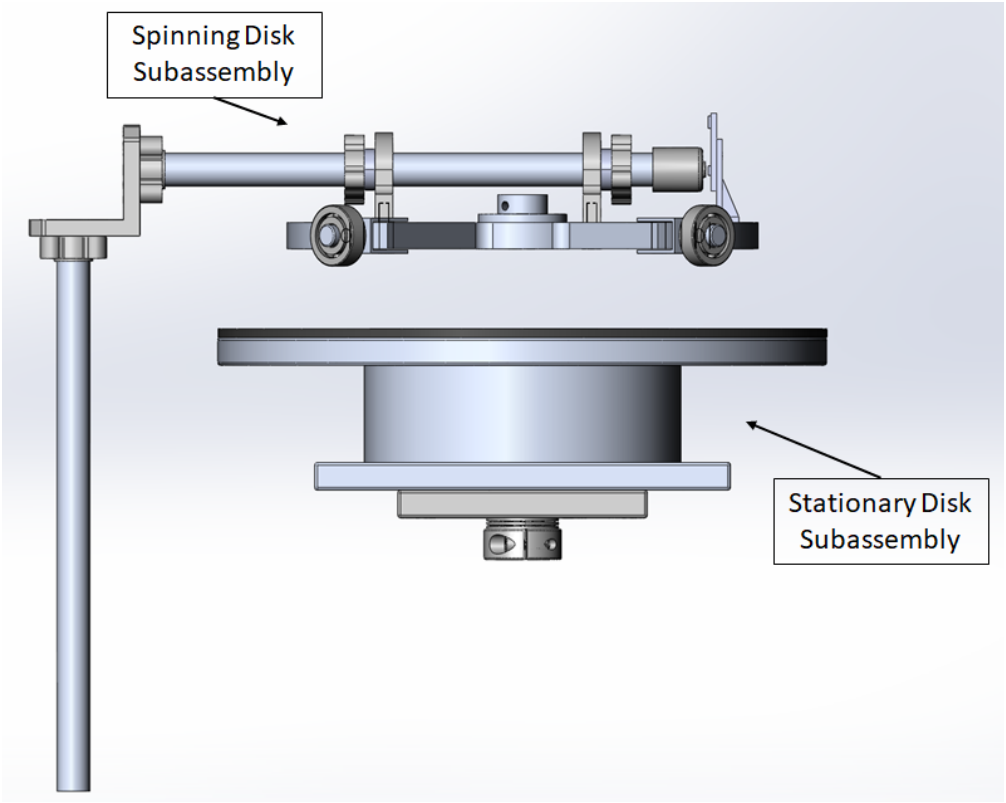

Figure 5: Pendulum Top - Exploded View

Figure 5 shows an exploded view of the Pendulum Top subassembly. The subassembly consists of two further subassemblies: a Spinning Disk and a Stationary Disk. The spinning disk has four bearing wheels attached to its outer radius to allow for smooth and even rotation. This rotation will allow for the pendulum to swing back and forth to an upright position. The spinning disk is supported by the stationary disk subassembly which contains the slip-ring inside.

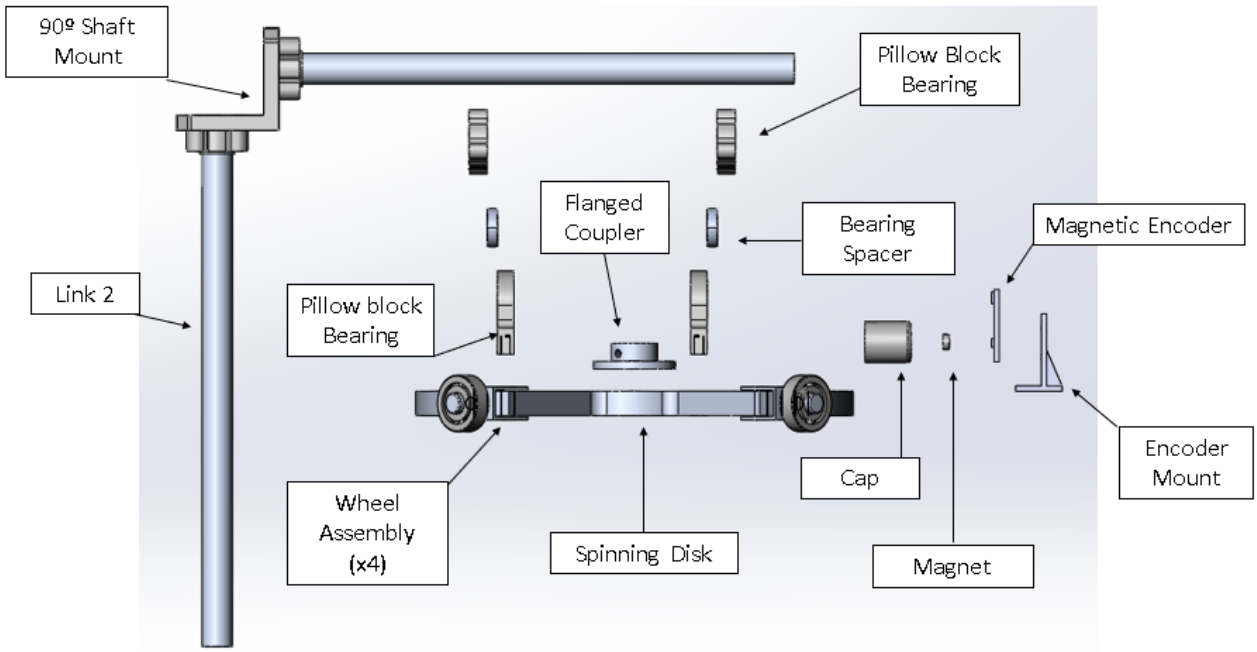

Figure 6: Spinning Disk - Exploded View

Figure 6 shows an exploded view of the spinning disk subassembly. On the topside of the spinning disk is a flanged coupler that attaches the motor shaft to the spinning disk to enable the movement of the system. The spinning disk is cut into an odd shape to reduce its moment of inertia. On the outer edge of the spinning disk are four wheel assemblies as depicted in **Figure 7.** The pendulum itself consists of link 1 (horizontal) and link 2 (vertical). Link 1 is supported by two pillow blocks and two screw hubs. Link 1 and 2 are connected by a 90-degree coupler. There is also a magnetic encoder mount, which attaches to the spinning disk and allows for the magnetic encoder to be mounted. The magnetic encoder will utilize the encoder magnet attached to Link 1 to allow for reading of Link 1's angular position. The flanged coupler sits on top of the spinning disk to allow for ease of assembly/disassembly.

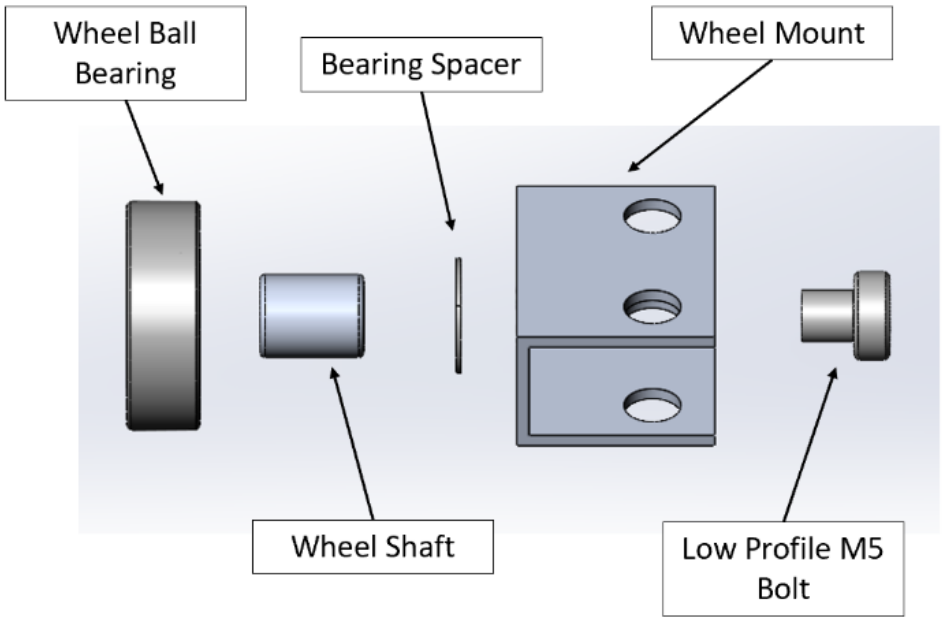

Figure 7: Wheel Assembly - Exploded View

Figure 7 depicts an exploded view of the wheel assembly. The bearing acts as the actual wheel and is press-fit onto a wheel shaft secured to the wheel mount by a low-profile M5 bolt. The wheel mount is attached to the spinning disk to secure the assembly to the spinning disk.

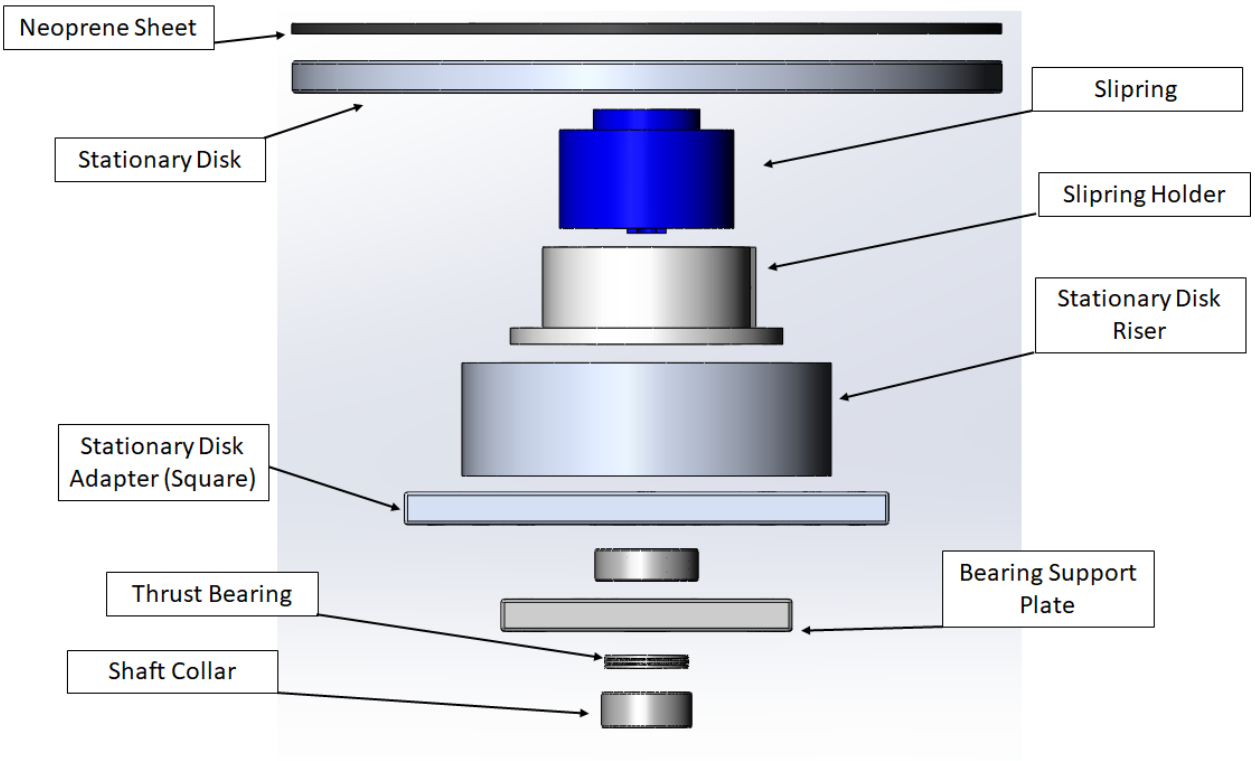

Figure 8: Stationary Disk - Exploded View

Figure 8 shows a side view of the exploded stationary disk subassembly. The subassembly involved a shaft collar at the very bottom as well as a combination of thrust and ball bearing with a spacer between them. These bearings are used to ensure that the motor shaft in **Figure 9** is supported both radially and axially. The ball bearing is pressed into a square platform called the Stationary Disk Adapter that allows for the stationary disk subassembly to be attached to the Frame. Attached to the stationary disk adapter is a tall circular tube of aluminum called the Stationary Disk Riser. that is attached to the square platform and supports the stationary disk at the top. Inside the stationary disk riser is a slip-ring and its 3D Printed holder to ensure the slip-ring is held stationary. The stationary disk adapter had a hole that was intended to allow for a press-fit for the ball bearing. However, the hole was too large and so an additional plate called the Bearing Support Plate was machined to allow for the ball bearing to be pressed firmly into the system.

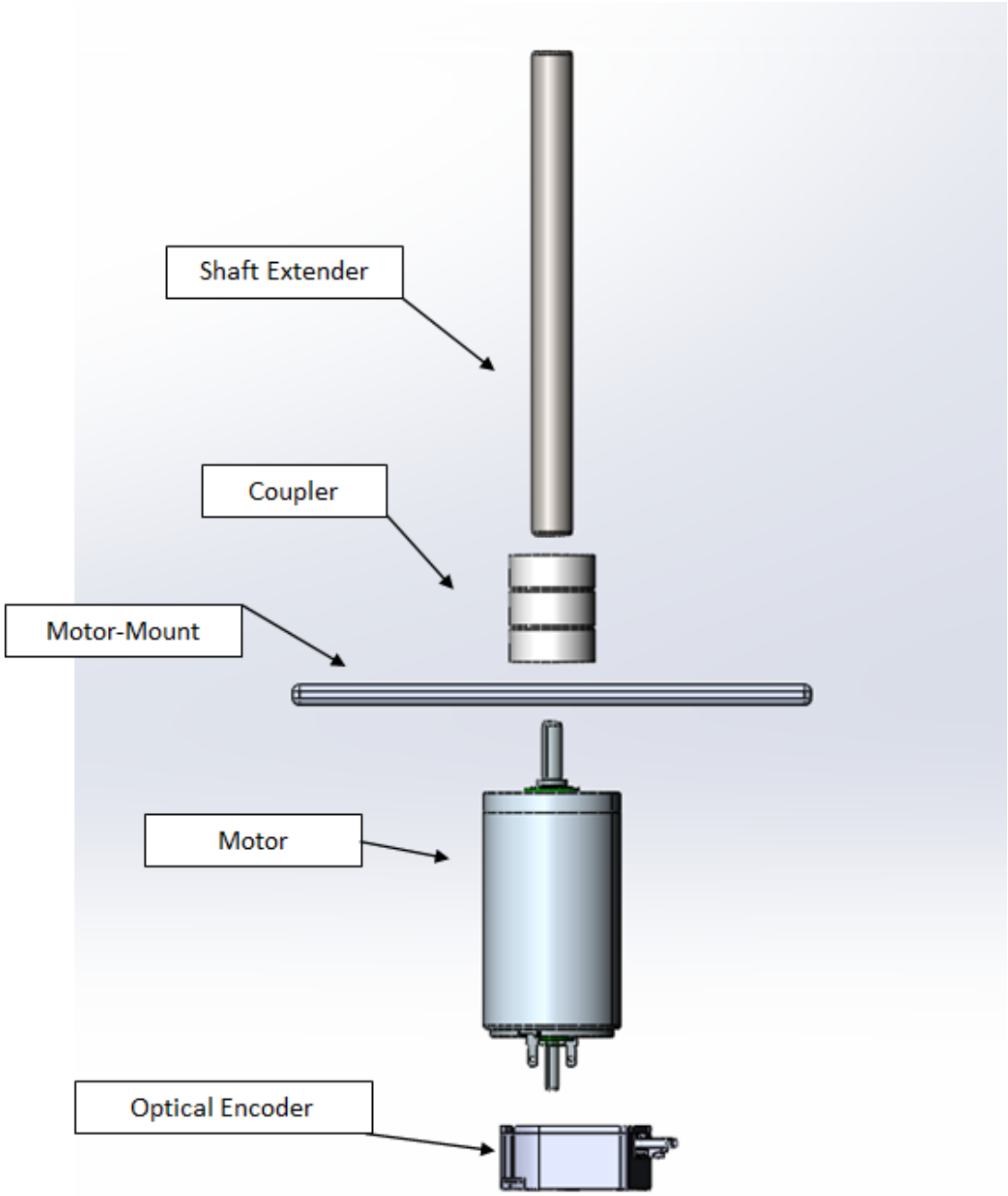

Figure 9: Motor and Shaft Assembly - Exploded

Figure 9 depicts the Motor System for the Furuta Pendulum System. The optical encoder is mounted directly to the bottom of the motor, which is then mounted to the motor mount by screws The motor mount is attached directly to the frame. The coupler connects the motor's shaft to the shaft extender, effectively increasing the shaft size and length.

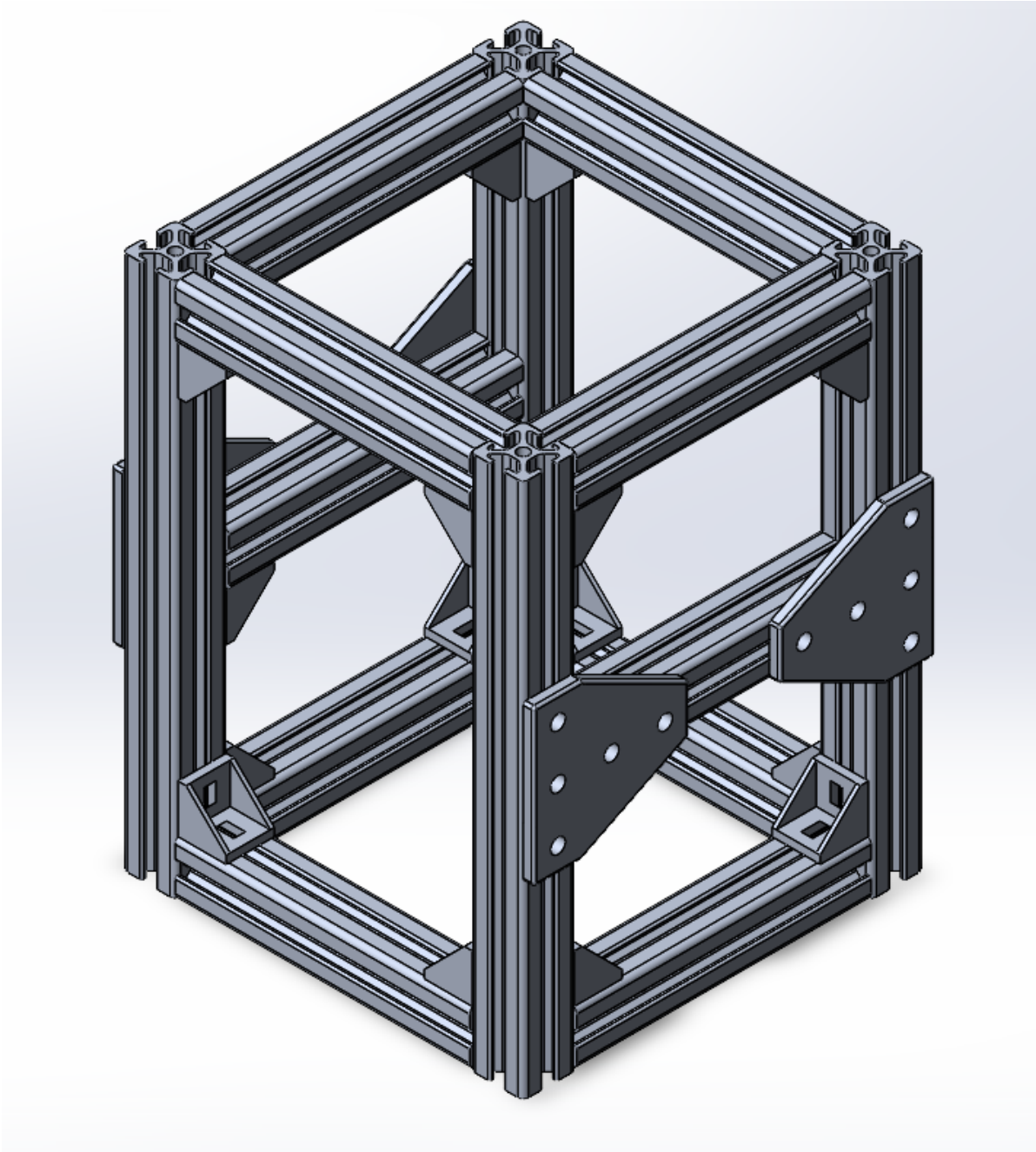

Figure 10: Frame Assembly - Isometric View

Figure 10 depicts an isometric view of the frame of the Furuta pendulum. The extruded aluminum bars are attached together by gausset corner brackets at each corner and two T-flat joining plates on opposite sides to attach the horizontal extruded aluminum in the center. The stationary disk adapter in **Figure 8** is fixed directly to the top of the frame assembly and motor mount in **Figure 9** is fixed to the T-frame going across the horizontal T-frames in the center.

Design Analysis:

The sponsor has provided an algorithm to control the Furuta pendulum. It is designed to manage the motor's torque to spin Link 1 back and forth until Link 2 is positioned vertically upright; it can rotate a full 360 degrees if needed. The control algorithm then switches its directive to controlling the motor precisely so that Link 2 remains balanced upright. The algorithm is based on a predictive model using the dimensions of the pendulum to provide an animation.

Figure 11 below shows a screenshot of the animation where Link 2 (pictured as green) is balanced upright on Link 1 (pictured as red).

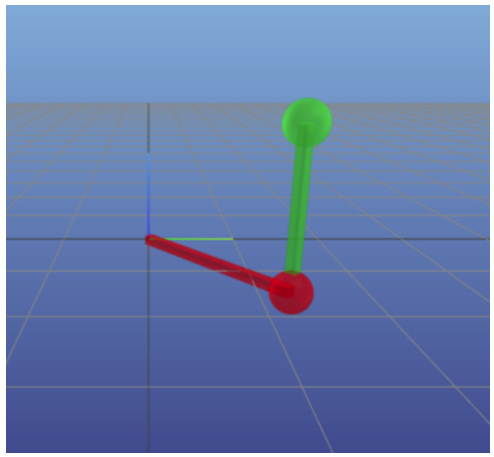

Figure 11: Control Algorithm Animation of Furuta Pendulum

Design Testing:

Strength test: A strength test was conducted to ensure that the Furuta Pendulum system can function properly without any components breaking. The main components focused on during the strength testing phase is the motor and frame as they will undergo axial force and torque respectively. To test the frame, the motor was attached and the frame was clamped down to a surface to ensure it does not rotate. The motor was run with the pendulum top subassembly to ensure that the frame and motor could withstand the forces they will be undergoing. We found that the frame, motor, and pendulum subassembly were able to handle the forces applied when the system was turned on and active. The testing document and results can be found in Appendix D.

Friction test: The friction test was conducted to ensure any rotating part will rotate with minimal friction allowing the pendulum to balance the link. The main focus during this phase was any component that used a bearing. To test for friction we rotated the shaft while it was inside the bearing and made a judgment call on whether or not it rotates easily enough. This phase of testing was rather safe as there were no components running and no chance of anything breaking or moving unexpectedly. We found that of the systems we tested, only the bearings attached to the spinning platform caused any issue. Three of the four bearings were in contact with the plate, which meant only three of the four bearings were being used to distribute the weight of the pendulum to the frame. We made the judgment call that only three bearings was plenty for the system to work as intended, so the fourth bearing was not necessary. The testing document and results can be found in Appendix D.

Integration test: This test ensured that each subassembly connected to other subassemblies correctly, and operated smoothly without interference. This test was done simply by assembling each subassembly and connecting them together and then running the system to ensure there were no problems when subassemblies were connected. As long as the pendulum passes the previous two tests there should be no safety concerns, but safety precautions were still taken in case anything unexpected went wrong. The system passed this test flawlessly, as every subassembly connected to the others firmly and without issue. All of the rotating subassemblies rotated smoothly without interference from the non-rotating subassemblies. The testing document and results can be found in Appendix D.

Control test: The control test occured after the pendulum is assembled and consisted of running the pendulum using the control algotherm supplied by the Robotics Control Laboratory. Any problem that occurred in this section required a debugging of the code, additional weight added, and for the system to be tested again. The safety concerns here were not completely known as it was completely dependent on how the code reacted with the pendulum, but since the pendulum passed the previous tests the system was considered safe. That being said, due to the uncertainty of how the code and the pendulum will react together extra safety precautions were taken. The system failed its first balance test, but with the addition of 63.5 grams of weight to the tip of Link 2, the system performed well and balanced the pendulum upright. The testing document and results can be found in Appendix D.

Bill of Material/Budget:

The table below lists the materials and devices provided to the team by the sponsor, as well as a detailed list of all parts included in the design. This varies from screws, to hammer nuts, to raw material in the form of bars, rods, and sheets.

Potential risks are primarily based around McMaster-Carr or Grainger running out of material required for the current design, shipping issues, 3D printing failures, and errors in the design. In addition, the design can always change, which may lead to the purchasing of new materials for manufacturing.

Item #	Qty	Name	Dimensions/Part Number	Manufacturer/ Material	Vendor/Fabricator	Cost
1	1	T-Slotted Framing Rails	5537T101 8-ft	6560 Aluminum	McMaster-Carr	$23.49
2	20	Closed Gusset Corner Bracket	5537T81	Aluminum	McMaster-Carr	$132.80
3	1	12"x12", 10mm Thick Sheet Stationary Plate	7627T22	MIC6 Aluminum	McMaster-Carr	$108.27
4	1	6"x12", 6mm Thick Sheet Motor Mount	7627T12	MIC6 Aluminum	McMaster-Carr	$51.15
5	1	9" Diameter, 1/2" Thick Stationary Disc	1610T67	6061 Aluminum	McMaster-Carr	$80.26
6	1	4.5" Diameter, 3" Thick Disc	1610T39	6061 Aluminum	McMaster-Carr	$33.61
7	1	Push-On External Retaining Rings	96415A130	1050 Spring Steel	McMaster-Carr	$8.11
8	10	M5 Single Frame Fasteners	5537T161	Zinc-Plated Steel	McMaster-Carr	$24.50
9	1	12mm Shaft Extension Rod	1482K19	1566 Carbon Steel	McMaster-Carr	$10.64
10	1	U-Channels for Wheel Connections	9001K713	6063 Aluminum	McMaster-Carr	$8.96
11	1	8-mm rods for wheels	4634T34	6061 Aluminum	McMaster-Carr	$2.00
12	1	M5 Nuts	90592A095	Steel	McMaster-Carr	$1.76
13	1	M5 Triple Frame Fasteners	5537T425	Zinc-Plated Steel	McMaster-Carr	$7.03

14	1	M5 Double Frame Fasteners	5537T464	Zinc-Plated Steel	McMaster-Carr	$5.55
15	1	M3 Motor Screws	91294A130	Black-Oxide Alloy Steel	McMaster-Carr	$6.36
16	1	M4 Flange Screws	90128A215	Zinc-Plated Alloy Steel	McMaster-Carr	$8.48
17	1	M4 Nuts	90592A090	Steel	McMaster-Carr	$1.41
18	1	M5x0.8 15mm Screws	91290A231	Black-Oxide Alloy Steel	McMaster-Carr	$12.32
19	1	6-32, 1/2" Screws	91274A012	Steel	McMaster-Carr	$9.39
20	1	M5x0.8 5mm Screws	92855A501	Steel	McMaster-Carr	$8.80
21	1	M5x0.8 16mm Screws Low Profile	93070A125	Alloy Steel	McMaster-Carr	$14.37
22	1	Needle-Roller Thrust Bearing	5909K12	Steel	McMaster-Carr	$4.67
23	2	Thrust Bearing Washer	5909K72	Steel	McMaster-Carr	$3.66
24	1	12mm Bore Ball Bearing	5972K313	Steel	McMaster-Carr	$6.06
25	1	Shaft Collar	9506T6	Steel	McMaster-Carr	$6.43
26	4	T-Flat Joining Plates	55MT49	Aluminum	Grainger	$34.80
27	4	8-mm bore ball bearings for wheels	49DD59	Steel	Grainger	$19.24
28	2	12mm Pillow Block	535108	Aluminum	ServoCity	$15.98
29	1	12mm Stainless Steel Shim 12-pack	2807-1215-1000	Stainless Steel	ServoCity	$2.99
30	1	12mm Angle Pattern Mount	1202-0001-0003	Aluminum	ServoCity	$8.49
31	1	8mm Shim for Wheels 12 pack	2807-0811-0500	Aluminum	Servocity	$2.59
32	2	12mm Bore Set Screw Hub	545644	Aluminum	Servocity	$11.98
33	2	12 mm OD Aluminum Tubes 200mm	4100-1012-0200	Aluminum	Servocity	$3.18

34	2	1301 Series Clamping Mount	1301-0016-0012	Aluminum	Servocity	$5.99
35	1	12mm ID Steel Spacer	1515-0015-0040	Steel	Servocity	$3.19
36	1	Spinning Disk	170x140mm	6061 Aluminum	SendCutSend	$29.00
37	1	Rubber Sheet 8x8" 1/16" thick	8x8" 1/16"	Neoprene Rubber	Amazon	$20.00
38	1	Rigid Flange Coupler	2 x 12mm	Aluminum	Amazon	$9.99
39	1	Slip Ring	12.7mm ID, 6 Channel	Plastic/Precious Metals	Amazon	$52.84
40	1	Shaft Coupler	6mm to 12mm	Aluminum	Amazon	$13.49
41	1	Maxon DC motor RE 40	148877	Maxon	N/A	$0.00
42	1	Encoder	HEDS-5540#A1	Avago	N/A	$0.00
43	1	Magnetic Encoder	AS5047D	AMS	N/A	$0.00
					Total Cost:	$813.83

Schedule:

Referring to the schedule in Appendix C, the following general schedule was formulated. Originally this schedule was formulated for the team's Critical Design Report. In this Final Design Report the following schedule was updated to reflect the actual timeline of the project. Manufacturing and assembly took much longer than expected, which caused delays in the testing and final deliverables. However, the final product was assembled together and delivered to the sponsors early enough that the sponsor was able to put the controls algorithm in place to enable the product to work as intended.

- **Design Concept** **1/9/2022 - 1/30/2022**
    - **Pendulum**
    - **Top**
    - **Motor**
    - **Frame**
    - **Panels**
    - **CDR**
- **Manufacturing** **1/28/2022 - 4/12/2022**
    - **Raw Materials**
    - **Machining**
    - **3D Printing**
    - **Tooling/Fixtures**
    - **Assembly**
- **Testing** **4/12/2022 - 4/26/2022**
    - **Force Test**
    - **Integration Test**
    - **Controls Test**
    - **Friction test**
- **Final Deliverables** **4/27/2022 - 5/4/2022**
    - **Prototype Demo**
    - **Final Poster and Project Video**
    - **Senior Design Showcase**
    - **FDR Presentation and Product Documentation**
    - **Product Demo**

Social Impact and Ethical Analysis

The Furuta pendulum was created for the Robotics Control Laboratory, a research laboratory at Boise State University, for the purpose of testing control algorithms. The pendulum will help accelerate their research in enabling robots to efficiently and robustly perform desired manipulation and locomotion tasks. For the most part there are little to no negative impacts from the Furuta pendulum, with the biggest concern being the carbon footprint of building this system. With that in mind, our team attempted to minimize the carbon footprint by ordering as many parts in the same order. On top of this we attempted to minimize the waste material we had.

Conclusions and Recommendations:

The team was tasked with creating a compact, low friction Furuta pendulum to test control algorithms for Dr. Satici's Robotic Control Laboratory. The design was broken down into three main sections: Control Algorithm, Electrical, and Mechanical, with the Mechanical section having the bulk of the functions. The Control Algorithm was provided to the team with the main intent being to allow an analysis of the system to be performed in order to ensure every function from the Mechanical and Electrical sections integrated properly with the code. It also ensured that parts meet the correct tolerances and proper requirements for the pendulum to run smoothly. Based on the Mechanical and Electrical sections of the design a list stating the specifications for the design had been created, each of which relates to a specific need for the design.

Early in the semester, the team finalized a design for the project based on these specifications and received confirmation on the design by Dr. Satici and Nardos Ashenafi. The finalized design addressed the issues brought up during meetings and the CDR presentation at the end of Fall 2021. With the final conceptual design in hand, the team ordered parts and set to work manufacturing and assembling. During this process, issues with the design were found, inaccuracies in machining, errors in purchasing, parts not coming as quickly as intended, and parts not fitting together as hoped. These issues were overcome each time by the team's quick response to the problem and eagerness to seek help from the project sponsors and mentors. Overall the project cost about $813.83; although, this price excludes any cost of shipping that the school paid.

The process of managing this project from conception to completion was a grueling one for the team. It required the skills of each team member and their experiences throughout their education at Boise State University. The project demanded skills in brainstorming, Solidworks model drafting, machining, assembly, and problem solving. Many problems that the team encountered were caused by rookie mistakes that are expected to be prevalent in the first large-scale project the team has had the opportunity to work on. If the team were allowed to restart the project, the units would likely be set to imperial to make purchasing and machining more uniform and easy.

For future reference, there are still improvements that can be made to the Furuta pendulum. There are four wheels attached to the rotating platform, but only three of the wheels are in contact with the plate. There is enough contact to ensure that there is no issue, but it would be preferable to have all four wheels in contact. The slip ring in the design also causes slight issues with the rotation of the pendulum though that can be mitigated by proper wire management. It would be beneficial to find a different slip ring that does not introduce the same problem.

This project has proved a valuable experience to all members of the team, providing insight into product development and the amount of work required to deliver a final product. The team set out early Fall 2021 to design and create the mechanical system of a Furuta pendulum to provide to the Robotics Control Laboratory. The team delivered the system in April 2022, and by the end of the semester the team was able to present a fully functional inverted pendulum at the Senior Design Showcase. With the help of the team's mentors, the Robotics Control Laboratory and the Machine Shop on campus, the project was successfully completed and a functional Furuta pendulum delivered.

References:

[1] Acosta, J. A. “Furuta's Pendulum: A Conservative Nonlinear Model for Theory and Practice.” Hindawi Publishing Corporation, 6 Nov. 2009.

[2] Cazzolato, Benjamin Seth, and Zebb Prime. “On the Dynamics of the Furuta Pendulum.” Hindawi Publishing Corporation, 16 Feb. 2011.

[3] Collins, Danielle. “Encoders.” *Design World Motion Control Classroom*, Design World, 2020, https://www.designworldonline.com/encoders-classroom?utm_source=google&utm_medium=cpc&utm_campaign=encoders-classroom&campaignid=13953017162&adgroupid=126621878562&gclid=CjwKCAjwzaSLBhBJEiwAJSRoksS0LglX8m1F9eWLURJhXJzkAFV8Sw4afLUB1aIu795Umua3Fl-VyhoCvwwQAvD_BwE.

[4] Cook, Jeremy S. “Types of Encoders - How to Select a Rotary Encoder.” *Arrow.com*, Arrow, 6 Mar. 2020, https://www.arrow.com/en/research-and-events/articles/how-to-understand-the-different-types-of-encoders.

[5] Dynapar. “Optical Rotary Encoders.” *Dynapar*, Dynapar, 21 Apr. 2018, https://www.dynapar.com/technology/rotary-optical-encoder/.

[6] “NFPA 70®: National Electrical Code®.” *NFPA 70®*, National Fire Protection Association, 2020, https://www.nfpa.org/codes-and-standards/all-codes-and-standards/list-of-codes-and-standards/detail?code=70.

[7] *RE 40 40 Mm, Graphite Brushes, 150 Watt - Maxongroup.es*. Maxon, https://www.maxongroup.es/medias/sys_master/root/8881624186910/EN-21-151.pdf.

[8] Staff, CSS Editorial. “Wire Color Codes.” *Creative Safety Supply*, Creative Safety Supply, 2 Nov. 2017, https://www.creativesafetysupply.com/articles/wire-color-codes/.

[9] Smoot, Ryan. “What's the Difference between an Incremental Encoder's PPR, CPR, and LPR?” *CUI Devices*, 6 June 2017, https://www.cuidevices.com/blog/what-is-encoder-ppr-cpr-and-lpr.

Appendices:

APPENDIX A - Calculations and Assumptions

Nomenclature:

- θ_1: Angular rotation of link 1
- θ_2: Angular rotation of link 2
- τ_1: Torque applied to link 1 by the motor
- τ_2: Torque applied to link 2 by link 1
- m: Mass of the link 2
- 2l: Total length of the link 2
- g: Acceleration due to gravity
- r: Length of link 1 (radius)
- K: Constant torque
- u: Control input
- τ: Control Torque
- M_1: Moment of inertia of link 1
- M_2: Moment of inertia of link 2
- p: Mass element (not sure what they mean by this)
- v: Velocity

Governing Equations:

Control Torque:

$$\tau = Ku$$

Reference frame of coordinates:

$$x_p = rcos(\theta_1) - psin(\theta_2)sin(\theta_1)$$

$$y_p = rsin(\theta_1) - psin(\theta_2)cos(\theta_1)$$

$$z_p = pcos(\theta_2)$$

Kinetic Energy:

$$KE(\theta_1, \theta_{1dot}, \theta_{2dot}) = \frac{1}{2}\int_0^{2l} v_p^{\ 2}(p)dm + \frac{1}{2}M_2\theta^2_{2dot}$$

- Velocity of the p-mass

$$v_p^{\ 2}(p) = r^2\theta_{2dot} + p^2\theta^2_{\ 2dot}sin^2(\theta_1) + 2rp\theta_{1dot}\theta_{2dot}cos(\theta_1) + p^2\theta^2_{\ 1dot}$$

Potential Energy:

$$PE(\theta_1) = mgl(cos(\theta_1) - 1)$$

Euler-Lagrange Equations:

- Physical Parameters

$$\alpha := \frac{mrl}{M1}$$

$$\beta := \frac{M_2 + mr^2}{M_1}$$

$$\gamma := \frac{K}{mgl}$$

$$\omega_o^{\ 2} := \frac{mgl}{M_1}$$

APPENDIX B - Schedule Fall 2021

1	Progress Report 1 Redo	Start	End	Duration	Completion
1.1	Stakeholder analysis reformatting	10/22/2021	10/22/2021	1	100%
1.2	Conclusions & Recommendations	10/22/2021	10/24/2021	3	100%
1.3	Add References	10/22/2021	10/24/2021	3	100%
1.4	Add Apppendices (If needed)	10/22/2021	10/24/2021	3	100%
1.5	Sumbit Progress Report 1 Redo	10/27/2021	10/27/2021	1	100%
2	**Progress Report 2**	**Start**	**End**	**Duration**	**Completion**
2.1	Standards and Regulations	10/29/2021	11/2/2021	4	100%
2.2	Background and Analysis	10/27/2021	11/2/2021	6	100%
2.3	Specifications	10/31/2021	11/5/2021	6	100%
2.4	System Block Diagram	10/27/2021	11/5/2021	9	100%
2.5	Update Conclusions and Recommendations	11/7/2021	11/7/2021	1	100%
2.6	Update References, Appendices, and Table of Contents	11/7/2021	11/7/2021	1	100%
2.7	Submit Progress Report 2	11/7/2021	11/7/2021	1	100%
3	**Prototype Tests and Concepts Development**	**Start**	**End**	**Duration**	**Completion**
3.1	Establish possible dimensions of Pendulum	11/8/2021	11/14/2021	7	100%
3.2	Brainstorming	11/14/2021	11/18/2021	5	100%
3.2	Prototype our design	11/15/2021	11/21/2021	7	0%
3.3	Finalize Materials	11/22/2021	11/28/2021	7	0%
3.4	Order parts	11/29/2021	12/19/2021	21	0%
3.5	Start of Machining and Development	11/29/2021	12/19/2021	21	0%
4	**Premiminary Design Report**	**Start**	**End**	**Duration**	**Completion**
4.1	Executive Summary	11/28/2021	11/29/2021	2	100%
4.2	Ethical Analysis	11/30/2021	12/1/2021	2	0%
4.3	Schedule	12/2/2021	12/3/2021	2	100%
4.4	Finalize Conlusions and Recommendations	12/4/2021	12/5/2021	2	50%
4.5	Finalize References, Appendices, and Table of Context	12/4/2021	12/5/2021	2	50%
4.6	Finish Preminiary Design Report and Presentations	12/5/2021	12/14/2021	10	50%

APPENDIX C - Schedule Spring 2022

1	Concept Design	Assigned To	Start	End	Duration	Completion
1.1	**Pendulum**		**1/16/2022**	**1/25/2022**	**10**	100%
1.11	Resizing Pendulum Links 1 & 2	Zach	**1/9/2022**	**1/16/2022**	**8**	100%
1.12	Redesign how Links 1 & 2 Connect	Zach	**1/9/2022**	**1/16/2022**	**8**	100%
1.13	Redesign Structural Support for Links 1 & 2	Zach	**1/17/2022**	**1/20/2022**	**4**	100%
1.14	Design integration of Pendulum to Encoder 1	Zach	**1/20/2022**	**1/23/2022**	**4**	100%
1.15	Assemble Pendulum Subassembly in Solidworks	Zach	**1/23/2022**	**1/25/2022**	**3**	100%
1.2	**Top**		**1/16/2022**	**1/25/2022**	**10**	100%
1.21	Design a Fixed platform to attach to the Frame	Quinn	**1/17/2022**	**1/20/2022**	**4**	100%
1.22	Design a rotating platform to sit ontop of the fixed platform	Zach	**1/20/2022**	**1/23/2022**	**4**	100%
1.23	Design connection between the rotating platform and the motor shaft	Quinn	**1/23/2022**	**1/25/2022**	**3**	100%
1.24	Reorganize Encoder 1 and Pendulum supports on rotating platform	Drew & Zach	**1/20/2022**	**1/23/2022**	**4**	100%
1.25	Provide clear routes for electrical wiring from Encoder to Slipring in Motor System	Drew	**1/23/2022**	**1/25/2022**	**3**	100%
1.26	Assemble Top Subassembly in Solidworks	Zach	**1/23/2022**	**1/25/2022**	**3**	100%
1.3	**Motor**		**1/16/2022**	**1/25/2022**	**10**	100%

1.31	Redesign motor mount design to work with the new Frame design	Zach	**1/17/2022**	**1/21/2022**	**5**	100%
1.32	Solidify Slipring Choice & 3D Model It	James	**1/17/2022**	**1/19/2022**	**3**	100%
1.33	Secure Encoder 2 if needed	Michael	**1/19/2022**	**1/22/2022**	**4**	100%
1.34	Assemble Motor Subassembly in Solidworks	Zach	**1/22/2022**	**1/23/2022**	**2**	100%
1.4	**Frame**		**1/16/2022**	**1/25/2022**	**10**	100%
1.41	Redesign frame to be rectangular with additional T-Slotted bars for Torque support	Zach	**1/16/2022**	**1/20/2022**	**5**	100%
1.42	**Provide Fixture Locations for Electrical Components**	Zach	**1/21/2022**	**1/23/2022**	**3**	100%
1.43	Assemble Frame Subassembly in Solidworks	Zach	**1/23/2022**	**1/25/2022**	**3**	100%
1.5	**Panels**		**1/16/2022**	**1/25/2022**	**10**	100%
1.51	Redesign aesthetic outside panels to fit the frame's redesign	James	**1/16/2022**	**1/20/2022**	**5**	100%
1.52	Provide Routes for wiring from electrical components to a separate interface	James	**1/21/2022**	**1/23/2022**	**3**	100%
1.53	Assemble Panels Subassembly in Solidworks	James	**1/23/2022**	**1/25/2022**	**3**	100%
1.6	**Get Approvel From Sponsor and Dr. Haight**	**PEND**	**1/19/2022**	**1/20/2022**	**2**	100%
1.7	**Critical Design Report**		**1/26/2022**	**1/30/2022**	**5**	100%
1.71	Update BOM	James	**1/26/2022**	**1/30/2022**	**5**	100%
1.72	Update Solidworks figures	Quinn	**1/26/2022**	**1/30/2022**	**5**	100%

1.73	Update Reference	Drew	**1/26/2022**	**1/30/2022**	**5**	100%
1.74	Update Design Description	Zach	**1/26/2022**	**1/30/2022**	**5**	100%
1.75	Update Schedule	Micheal	**1/26/2022**	**1/30/2022**	**5**	100%
1.76	Update Appendix	Micheal	**1/28/2022**	**1/30/2022**	**3**	100%
1.77	Update conclusions and recommendations	James	**1/28/2022**	**1/30/2022**	**3**	100%
1.78	~~Complete Social Impact TBD~~	Everyone	**1/28/2022**	**1/30/2022**	**3**	0%
1.79	~~Complete Ethical Analysis TBD~~	Everyone	**1/28/2022**	**1/30/2022**	**3**	0%
1.710	Update Table of content	Micheal	**1/28/2022**	**1/30/2022**	**3**	100%
2	**Manufacturing**	**Assigned To**	**Start**	**End**	**Duration**	**Completion**
2.1	**Raw Materials**		**1/28/2022**	**2/10/2022**	13	100%
2.11	Order and purchase parts	Michael/Nardos	**1/30/2022**	**2/16/2022**	**17**	100%
2.12	Recieve and Store purchased Parts	Pend	**2/6/2022**	**2/20/2022**	**15**	100%
2.13	Organize Purchased Parts	Pend	**2/20/2022**	**2/20/2022**	**1**	100%
2.2	**Machining**		**2/10/2022**	**2/24/2022**	15	95%
2.21	Mill out base and platforms	Michael/Zach	**2/10/2022**	**2/14/2022**	**5**	100%
2.22	Cut slotted T-frames to size	**Michael/Zach**	**2/18/2022**	**2/20/2022**	**3**	100%
2.23	Mill out holes on base and platforms for screws and wiring	**Michael/Zach**	**2/10/2022**	**2/14/2022**	**5**	100%
2.24	Mill out support brackets for T-frame assembly	**Michael/Zach**	**2/20/2022**	**2/24/2022**	**5**	100%
2.25	Cut Link rods to size, and resize them with Lathe	**Michael/Zach**	**2/28/2022**	**3/2/2022**	**3**	100%

2.26	Machine holes for the spinning disk and cut out the rubber track	**Michael/Zach**	**3/2/2022**	**3/4/2022**	**3**	100%
2.27	Machine a bearing plate for the stationary disk assembly	Micheal/Zach	**3/9/2022**	**3/14/2022**	**6**	100%
2.3	**3D Printing**		**1/30/2022**	**2/13/2022**	14	100%
2.31	3D Print the plastic pieces of the design	James	**1/30/2022**	**2/6/2022**	**7**	100%
2.32	Drill Holes into plastic as needed	James	**2/4/2022**	**2/8/2022**	**5**	100%
2.33	Finish 3D Print by Sanding and/or Polishing	James	**2/8/2022**	**2/13/2022**	**6**	100%
2.4	**Tooling/Fixtures**		**2/--/2022**	**2/--/2022**	#VALUE!	0%
2.41	**TBD**					100%
2.5	**Assembly**		**2/25/2022**	**3/6/2022**	12	0%
2.51	Assemble T-Slotted Frame and Attach to the Base	Zach/James	**2/28/2022**	**3/1/2022**	**2**	100%
2.511	Secure support brackets to T-Slotted Frame	Zach/James	**2/28/2022**	**3/1/2022**	**2**	100%
2.52	Assemble Motor Subassembly in-place with the T-Slotted Frame	Quinn/Drew	**3/1/2022**	**3/3/2022**	**3**	100%
2.521	Secure shaft extension to motor, and slipring to extended shaft	Quinn/Drew	**3/1/2022**	**3/3/2022**	**3**	100%
2.53	Assemble Top Subassembly in-place ontop of the T-Slotted Frames	Zach	**3/4/2022**	**3/6/2022**	**3**	100%
2.54	Place and wire electrical components	TBD	**3/3/2022**	**3/6/2022**	**4**	0%

2.55	Assemble Pendulum Subassembly and insert it into Encoder 1	Zach	**3/4/2022**	**3/6/2022**	**3**	100%
3	**Testing**	**Assigned To**	**Start**	**End**	**Duration**	**Completion**
3.1	**Force Tests**		**3/4/2022**	**3/11/2022**	**8**	**0%**
3.12	Ensure motor can withstand the axial force		**3/7/2022**	**3/9/2022**	3	100%
3.13	Ensure the encoder can withstand the bending moment		**3/7/2022**	**3/9/2022**	3	100%
3.14	Ensure the frame can withstand the torque applied to it		**3/8/2022**	**3/10/2022**	3	100%
3.2	**Integration Tests**		**3/6/2022**	**3/6/2022**	**1**	**0%**
3.22	Ensure that each subassembly connects to other subassemblies correctly, and operates smoothly and without interference		**3/6/2022**	**3/6/2022**	1	100%
3.3	**Controls Test**		**3/11/2022**	**3/11/2022**	**1**	**0%**
3.31	Connect Prototype electrical components to Computer and the device to ensure no short circuits		**3/11/2022**	**3/11/2022**	1	100%
3.32	Run Controllers to test if the Controller can balance the Pendulum reliably		**3/11/2022**	**3/11/2022**	1	100%
3.4	**Friction Test**		**3/11/2022**	**3/11/2022**	**1**	**0%**
3.41	Ensure that friction does not impede the movement of any rotating parts		**3/11/2022**	**3/11/2022**	1	100%
3.42	Run Controls Test again and Monitor Friction of various parts		**3/11/2022**	**3/11/2022**	1	100%

4	Final Deliverables	Assigned To	Start	End	Duration	Completion
4.1	**Prototype Demo and CATME Review**		**3/9/2022**	**3/18/2022**	10	100%
4.11	TBD when rubric is assigned					100%
4.2	**Final Poster and Project Video**		**4/10/2022**	**4/17/2022**	8	0%
4.22	Complete Poster draft to be reviewed in class		**4/10/2022**	**4/14/2022**		100%
4.22	Complete final poster		**4/14/2022**	**4/17/2022**		100%
4.3	**Senior Design Showcase**		**3/31/2022**	**4/28/2022**	29	0%
4.31	Complete Senior design showcase abstract		**3/31/2022**	**4/3/2022**		100%
4.32	Complete Senior design Brochure		**3/31/2022**	**4/3/2022**		100%
	Showcase 4:00-5:00		**4/24/2022**	**4/28/2022**		100%
4.4	**FDR Presntation and Product Documentation**		**5/1/2022**	**5/5/2022**	5	0%
4.41	FDR Presentation and Exit Documentation		**5/4/2022**	**5/4/2022**		100%
						0%
						0%

APPENDIX D - Testing Documentation

Testing Plan A

Table 1: Strength Test

Objective	The strength test is to ensure that the pendulum frame can handle the torque being produced by the motor based on the specification set in the CDR. Below are the specifications that we are testing. ● G1 - Maximum torque should not exceed more than 2560 mN-m ● G - The continuous operating torque should not exceed 187 mN-m
Assumptions	● Link 2 does note need to be able to balance for this test to be successful ● Applying the max torque that was set by the encoder (listed above in the objective)
Hazards and PPE	Hazards ● Components of the pendulum breaking from torque and flying outwards is a possibility. All individuals should stand away from the device while in operation for personal safety. PPE ● Safety glasses ● Closed toe shoes
Tools required	● DC Power supply to power the motor ● Clamps
Test Setup, Required Environment	Discuss the required environmental conditions. ● Clamp base of the pendulum to the table ● Hook up power supply to the motor
Procedure (Execution and Data Collection)	List the exact procedure to execute the test and collect data. 1. Hook up motor to the power supply 2. Slowly increase power until corresponding torque reaches the max 3. If the frame starts to bend/twist before max torque is achieved, stop the test to avoid as much damage as possible. 4. If the frame does not bend/twist when max torques are applied, change the direction of rotation.
Data Analysis & Conclusion	Data analysis will be confirmed through visual confirmation. When applying the max torque to the frame. If we see that the frame starts to bend/twist before

	max torque is applied we will consider it a fail. However, if max torque is applied and the frame doesn't bend then it will be listed as a pass.

Table 2: Data collection sheet

Subassembly	Pass/Fail	Potential Issues
Frame Subassembly	Pass	When the Pendulum is knocked over and the system re-enters the spin-up phase, it may become too powerful for the weight of the frame to keep the entire system from moving
Motor Subassembly	Pass	N/A
Spinning Disk Subassembly	Pass	N/A
Stationary Disk Subassembly	Pass	N/A
Wheel Assembly	Pass	Three of the Four Wheels are in contact with the stationary plate, but this does not seem to have a significant negative effect on the performance

(Data analysis / calculation recording area)

Tester Signature: ___Quinn Le_____

Date of Test: _____4/28/2022_____

Testing Plan B

Table 3: Integration Test

Objective	Give the test objective, concisely and specifically. Must include the exact specification(s) (Engineering Requirement(s)) tested. You can generate an objective statement/statements, followed by a bulleted list of exact Engineering Requirements tested. ● Ensuring accuracy in machining ● Connection between components does not interfere with the performance of other components
Assumptions	● Subassemblies are completed before attaching another sub assembly ● Link 2 does not need to balance during this test
Hazards and PPE	Hazards (omit only if you're sure there are none) ● When testing a moving part with other subassemblies, any person in the area should stand away from the device ● Hands being pinched between two parts. All individuals should take care when performing this experiment to ensure no harm is caused. PPE ● Safety Glasses ● Closed toed shoes
Tools required	● Wrenches ● Phillips,Flat head, hex keys, etc
Test Setup, Required Environment	● The subassembly should be fully assembled before attaching another subassembly to it ● One of the subassemblies should be secured down before attempting to attach the other subassembly to it
Procedure (Execution and Data Collection)	List the exact procedure to execute the test and collect data. 1. Secure one of the subassembly down to prevent it from moving while other subassembly is being attached 2. Ensure that holes line up and fasten down any bolts to secure the two subassemblies together. 3. Ensure any moving parts can still move freely without inference from the subassembly

	4. If the parts are secured together and both subassemblies can still operates smoothly without interference then it has passed the integration test
Data Analysis & Conclusion	The testing for the Integration Test will be a pass/fail test. If the holes for both subassemblies line up and both subassemblies can still operate smoothly without interference then it has passed the integration test. If the part fails the integration test parts may need to be remodeled or remade in order to fix the reason it has failed.

Table 4: Data collection sheet

Subassembly Combinations	Pass/Fail	Issues?
Frame & Motor	Pass	N/A
Frame & Stationary Plate	Pass	N/A
Frame & Pendulum	Pass	N/A
Motor & Stationary Plate	Pass	N/A
Motor & Rotating Plate	Pass	Connecting these two are difficult, but they do not interfere with one another
Motor & Pendulum	Pass	N/A
Stationary & Rotating Plates	Pass	N/A
Stationary Plate & Wheels	Fail	3 out of 4 Wheels touch the stationary plate, considered a failure because not all four wheels touch. However, it still operates with only 3 wheels touching.
Rotating Plate & Pendulum	Pass	N/A
Rotating Plate & Wheels	Pass	N/A

Tester Signature: _____Michael Gareau_____

Date of Test: _____4/15/2022_____

Testing Plan C

Table 5: Friction Test

Objective	Once the Furuta pendulum has been assembled, multiple areas of it need to be checked for ease of rotation. This test will check if the Bearings, Platform, and Links rotate with low enough friction to allow for the pendulum to function properly. ● H3 - Low friction bearings need to be used to facilitate the rotations of the pendulum ● Ensure platform bearings experience rolling friction
Assumptions	● Assume that the Pendulum is assembled and will withstand the forces applied by the system's motor. ● Assume that the individual parts of the Pendulum have a long life-span to facilitate long-term usage of the Pendulum. ● Tests will be manual, not requiring any components to be powered. ● The Frame will be fixed to the surface it is resting on. ● Each section of the Furuta Pendulum is connected securely.
Hazards and PPE	Hazards (omit only if you're sure there are none) ● Hands being pinched between parts. All individuals should take care when performing this experiment to ensure no harm is caused. PPE ● Closed toed shoes ● Safety Glasses
Tools required	● Assembled Furuta Pendulum Prototype
Test Setup, Required Environment	Discuss the required environmental conditions. ● Pendulum will be secured to prevent the base from moving ● No connection points can move. (i.e. Screws are properly set, etc)
Procedure (Execution and Data Collection)	List the exact procedure to execute the test and collect data. 1. A small rotational force will be manually applied to the motor shaft via our hands. 2. If it moves smoothly, without requiring more force, then it will be considered a Pass. 3. The platform will be given quick rotational impulses from the links to test for rolling friction or slipping friction. A pass will be given if the four (4) bearings experience rolling friction. 4. The platform will then be subjected to a small rotational force from the links. 5. A pass will be given if the platform moves smoothly, without requiring more force. 6. Hold the platform steady to prevent it from rotating. 7. Link 2 will be rotated to its uppermost position, forming an L shape. 8. The link will be released and inspected on how far it swings around.

	9. A pass will be given if the links smoothly rotate without getting slowed down. 10. If it fails then the links will be inspected for proper fittings with the pillow block bearings.
Data Analysis & Conclusion	The Friction Test will be conducted using a Pass/Fail system. A Pass will be given if each section rotates smoothly with little force required to cause motion. Some sections will be tested for their type of friction. If a test Fails then the sections will be inspected for proper force distribution and possible part replacement/redesign.

Table 6: Data collection sheet

Section	Pass/Fail	Part that Caused Failure
Motor Shaft	Pass	
Platform Bearings Experience Rolling Friction	Fail	3 out of 4 Platform Bearings Experience Rolling Friction. One bearing does not. Factory grease in bearing caused lots of friction due to low torque
Platform Rotates Smoothly	Pass	
Links Rotates Smoothly	Pass	

(Data analysis / calculation recording area)

Tester Signature: _____Drew Keller_____

Date of Test: _____4/28/2022_____

Testing Plan D

Table 7: Controls Test

Objective	Once the Furuta Pendulum prototype is assembled, the controlling circuit board and power supply will need to be connected to the pendulum. This test will ensure that the system can not only swing the pendulum, but balance it as required. Engineering Specifications Being Tested: ● C8 - The Furuta System must be able to repeatedly balance the pendulum. ● H1 - Link 1 needs to be dimensioned so it is able to rotate a full 360 degrees around the vertical axis without hitting anything. ● H2 - Link 2 needs to be dimensioned so it is able to rotate a full 360 degrees around the horizontal axis without hitting anything.
Assumptions	● Assume that the Pendulum is assembled and will withstand the forces applied by the system's motor. ● Assume that the individual parts of the Pendulum have a long life-span to facilitate long-term usage of the Pendulum.
Hazards and PPE	Hazards ● Due to the potential of electric shock, all electrical wiring shall be insulated and the electronics properly grounded. ● Due to the rotating and swinging motion of the pendulum while it is swinging up to a be balanced; all individuals will be standing away from the Pendulum until it is balanced ● Due to the moving nature of the pendulum, the assembly will be completely secured to reduce risk of flinging parts PPE ● Closed Toe Shoes ● Protective Eyewear
Tools required	● DC Power Supply ● Teensy Circuit Board ● Assembled Furuta Pendulum Prototype
Test Setup, Required Environment	Discuss the required environmental conditions. ● The Furuta Pendulum prototype must be fully assembled and fixed to a flat surface such as a table with a clamp. ● The Teensy circuit board must be pre-loaded with the control system algorithm, or connected to a computer outside of the Pendulum's range of operation to avoid collisions. ● Ensure that the optical and magnetic encoders are wired to the Teensy. ● Provide power to the system through a DC power supply, ensuring that the wiring is correct.
Procedure (Execution and Data Collection)	List the exact procedure to execute the test and collect data. 1. The DC Power supply will be turned on to provide power to the system

	2. The Teensy circuit board will be activated either by running the code from the attached computer, or a button/switch on the Teensy board itself 3. The Furuta Pendulum will be observed to ensure that it can swing the pendulum upright and balance it. A stopwatch should be used to determine how fast the system is able to balance the pendulum. 4. If the Pendulum will not balance, add weight to the Pendulum until it does, record the additional weight if needed. 5. Once balanced, gently push the pendulum to try and make the system correct itself in real time to balance the pendulum. 6. Push the pendulum over to ensure that the system can swing the pendulum back up to a balanced position afterwards 7. Perform this experiment 10 times.
Data Analysis & Conclusion	The collected data will be used to determine what is the minimum amount of added weight needed to balance the pendulum. It will also give an average time needed for the system to swing the pendulum up to a balanced position. The pendulum should achieve balance in 10-straight attempts to be considered a success.

Table 8: Data collection sheet

Trial #	Balanced?	Time (seconds)	Additional Weight?
1	No	N/A	0g
2	Yes	11.18	63.5g
3	Yes	10.27	63.5g
4	Yes	7.56	63.5g
5	Yes	8.34	63.5g
6	Yes	7.42	63.5g
7	Yes	10.67	63.5g
8	Yes	6.93	63.5g
9	Yes	8.30	63.5g
10	Yes	10.25	63.5g

Tester Signature: _____James Jones_____

Date of Test: _____4/29/2022_____