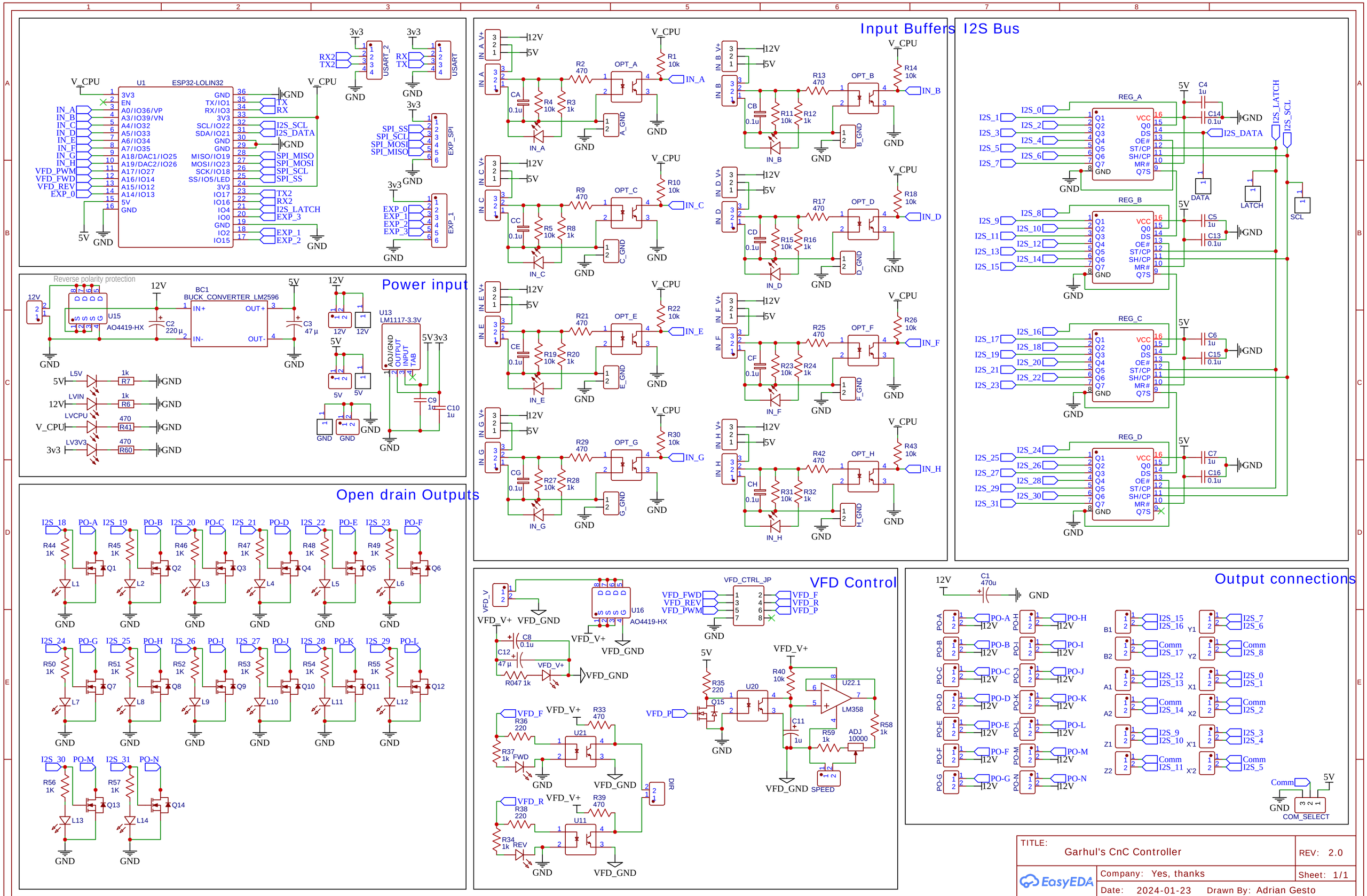

TITLE: Garhul's CnC Controller	REV: 2.0
Company: Yes, thanks	Sheet: 1/1
Date: 2024-01-23	Drawn By: Adrian Gesto