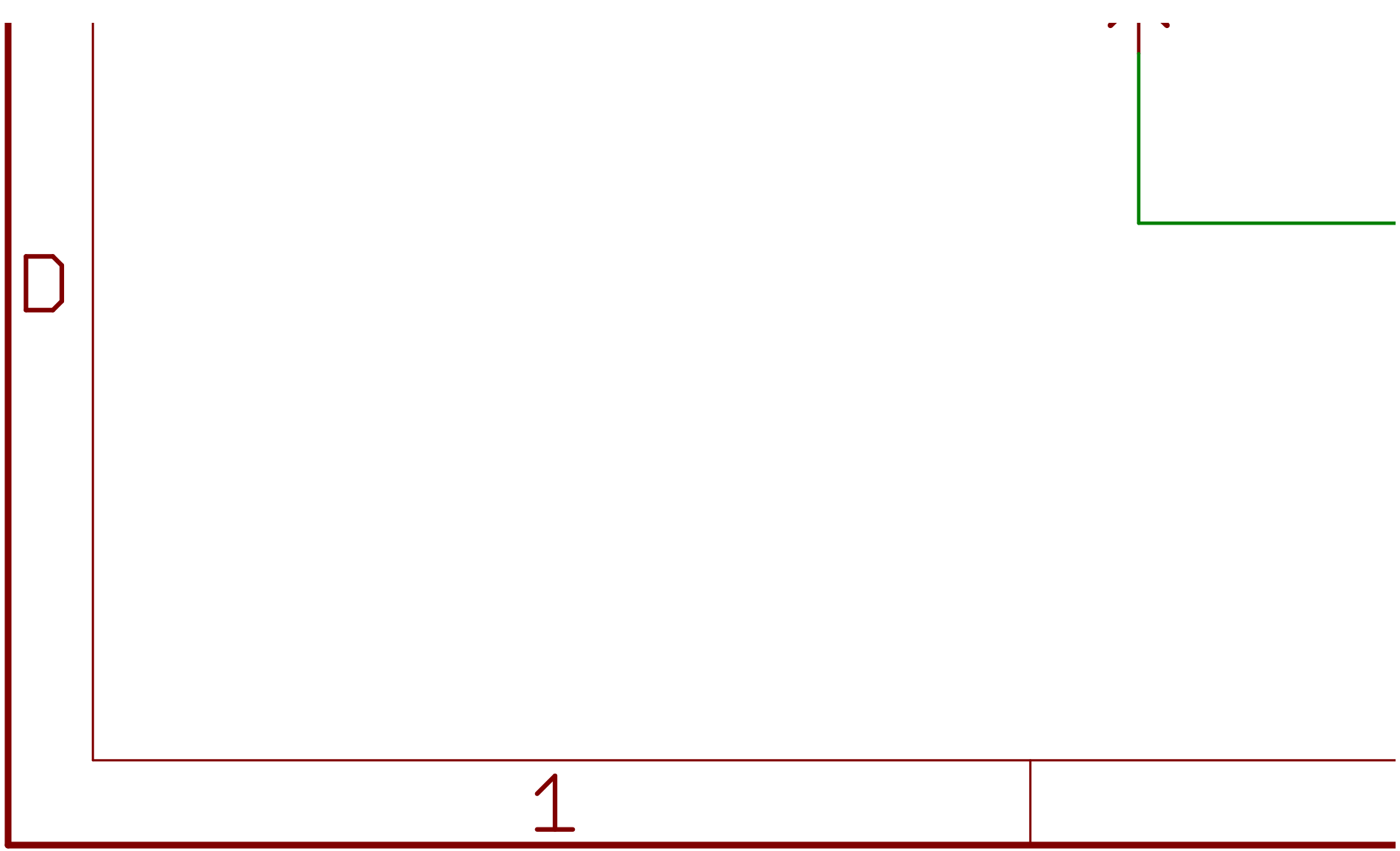
D
1

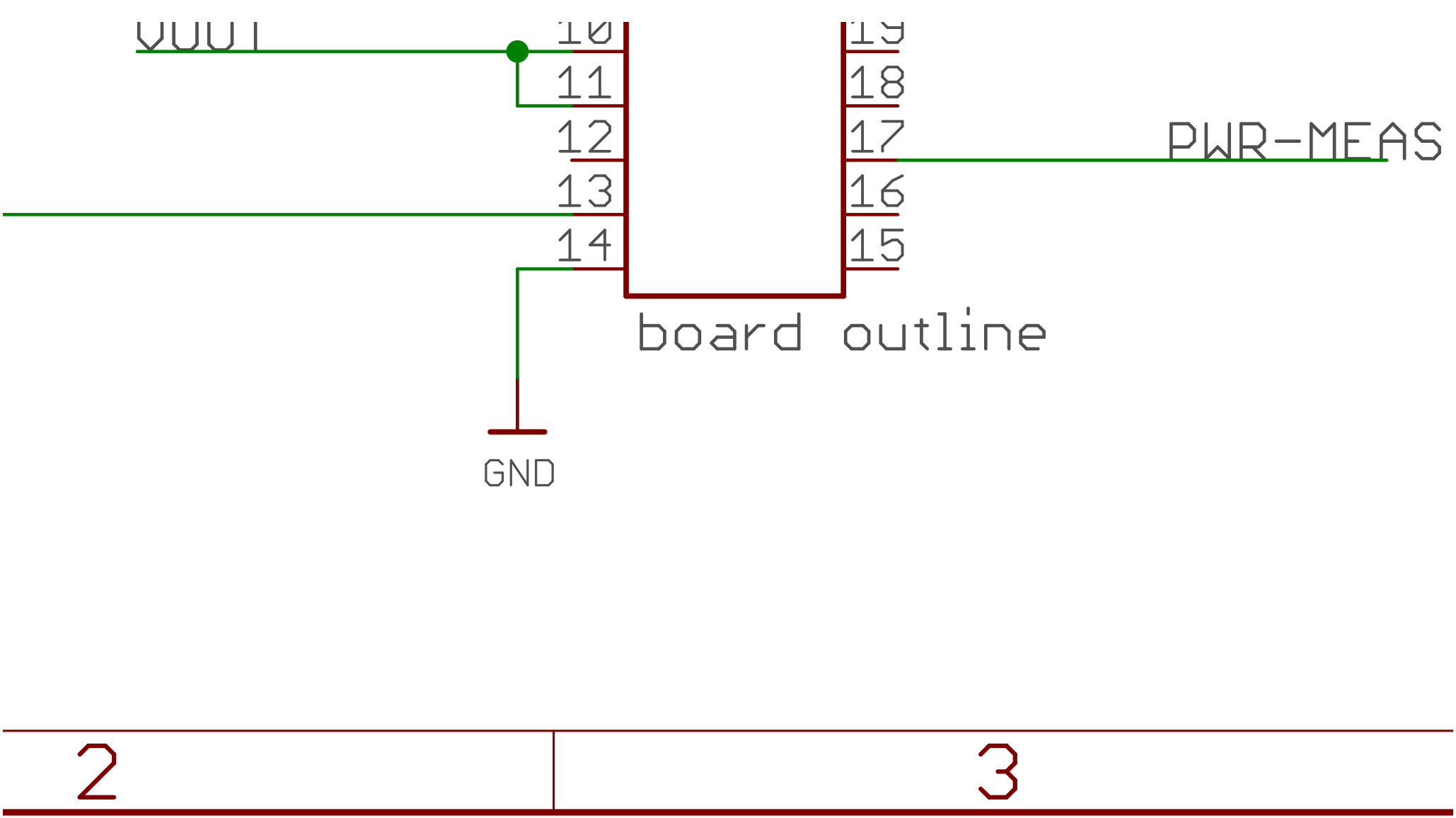
10
11
12
13
14
19
18
17
16
15
PWR-MEAS
board outline
GND

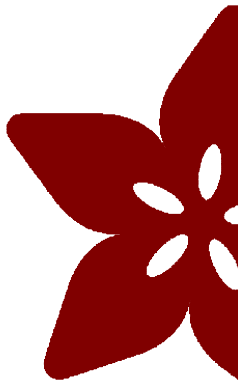

Adafruit INA1

1/16/17 12:17

Drawing: >AUTI

4

5

D

69 CurPowerMonitor

PM	Sheet: 1/1
HOR	Adafruit Industries
	6

C

VCC

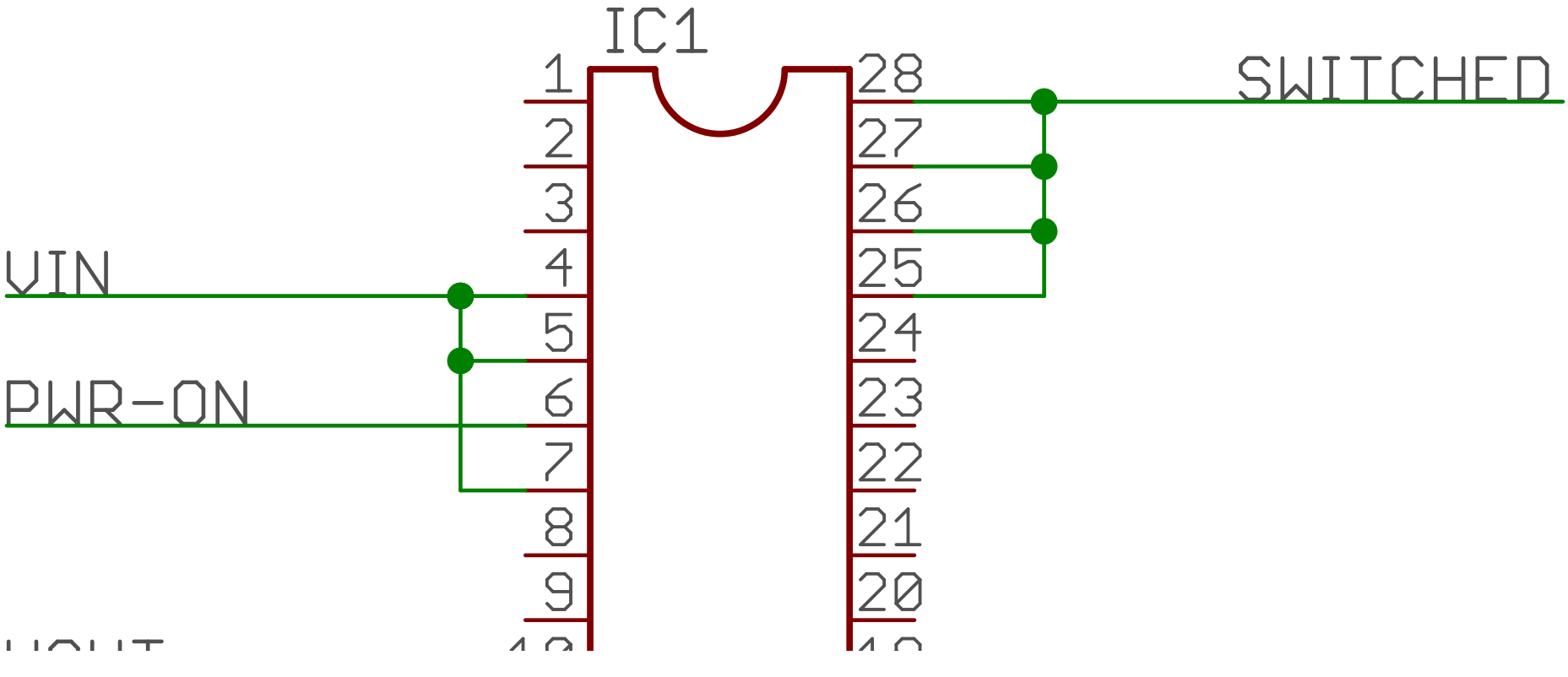
IC1
1
2
3
4
5
6
7
8
9
28
27
26
25
24
23
22
21
20
SWITCHED
VIN
PWR-ON

Destroyed bu

C

J. Garlick, Jan 2017

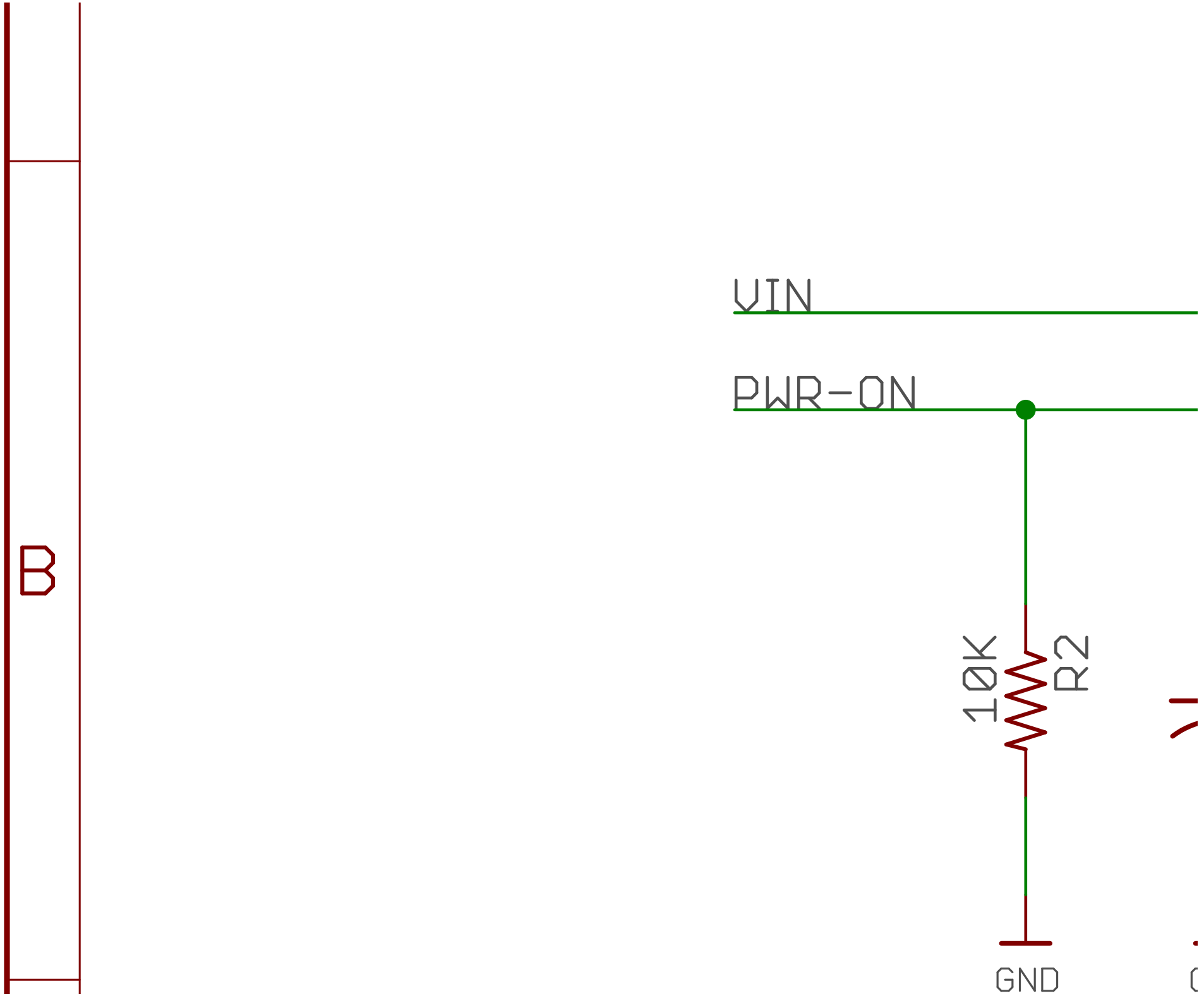
B
VIN
PWR-ON
10K
R2
GND

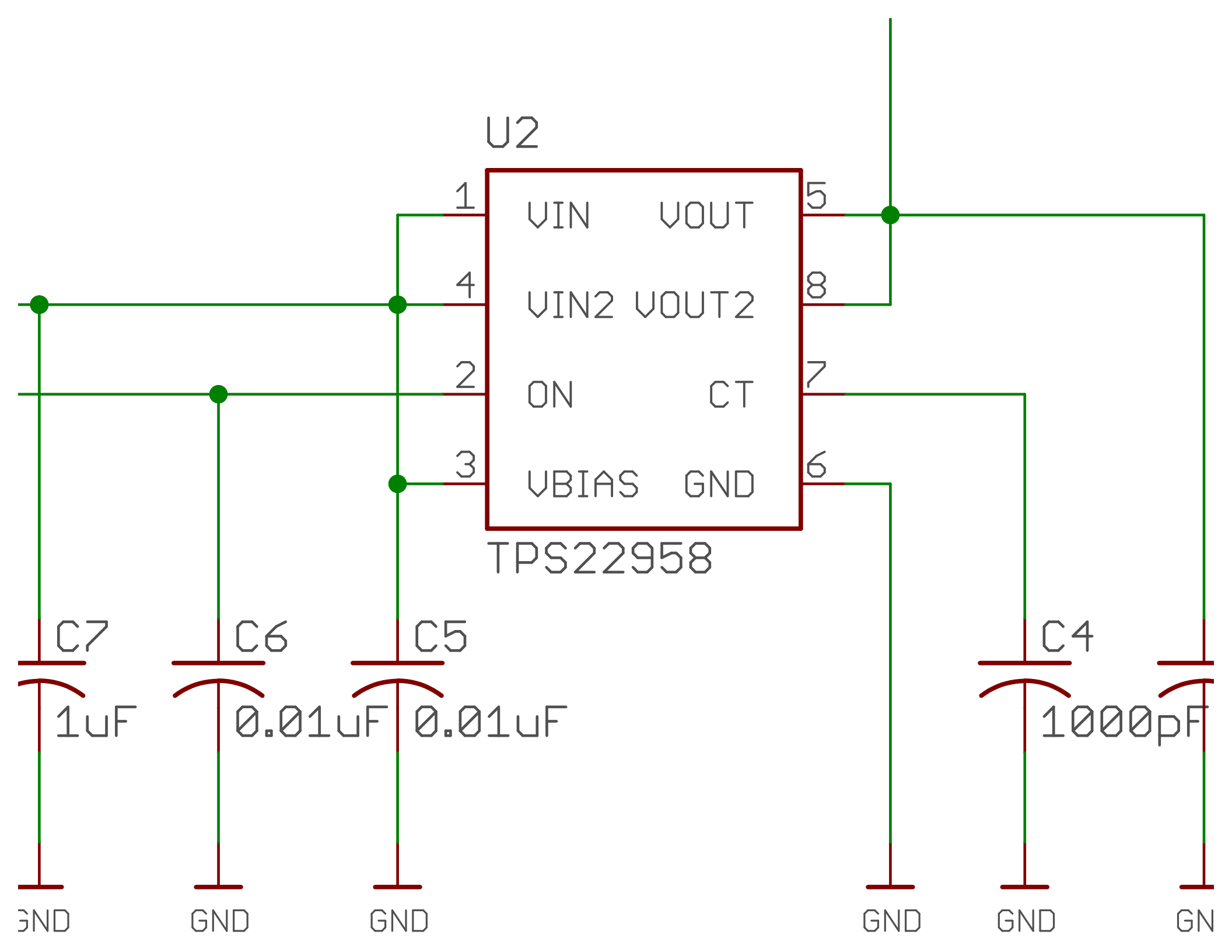
U2
1
VIN
VOUT
5
4
VIN2
VOUT2
8
2
ON
CT
7
3
VBIAS
GND
6
TPS22958
C7
1uF
C6
0.01uF
C5
0.01uF
C4
1000pF
GND
GND
GND
GND
GND
GN

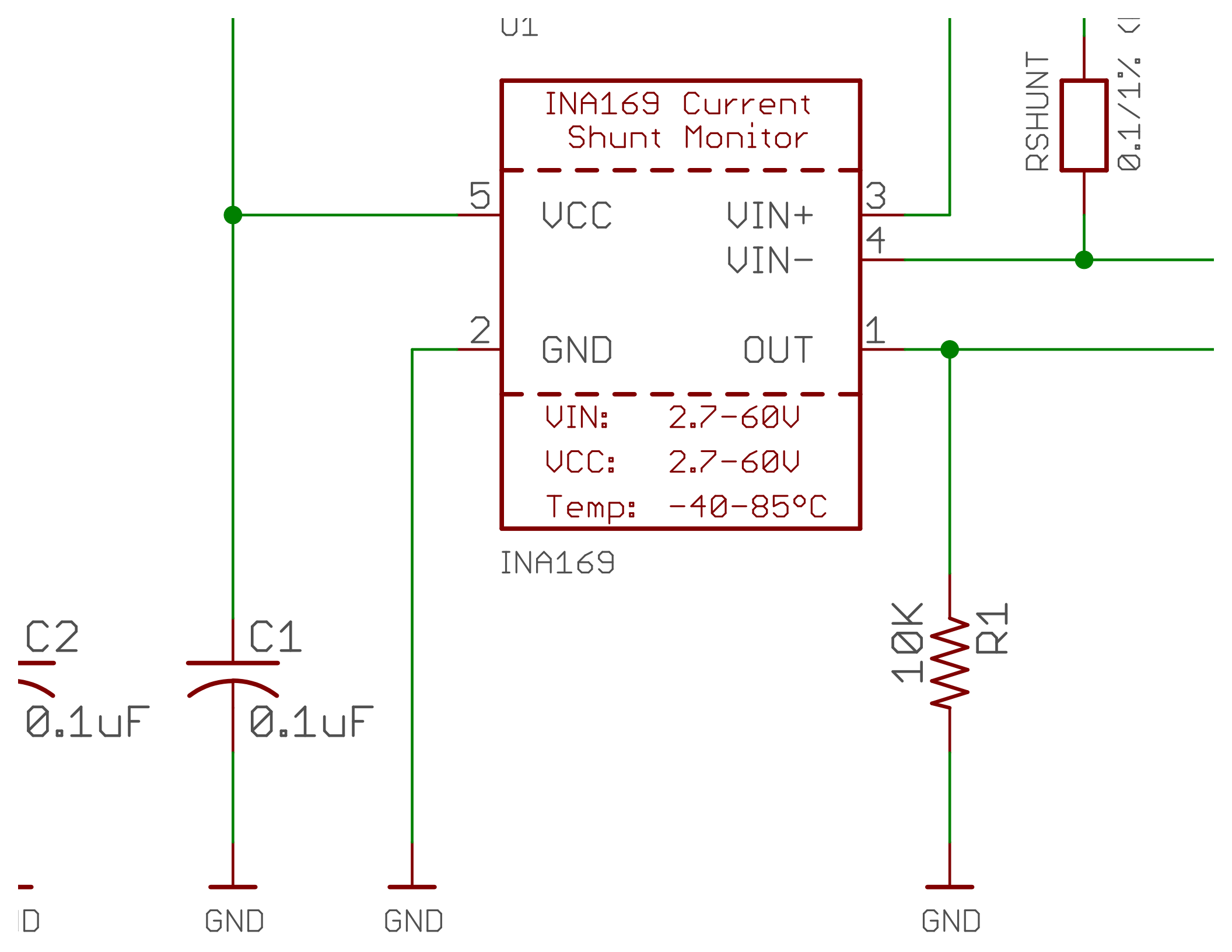
U1
INA169 Current
Shunt Monitor
5
VCC
VIN+
3
VIN-
4
2
GND
OUT
1
VIN: 2.7-60V
VCC: 2.7-60V
Temp: -40-85°C
INA169
RSHUNT
0.1/1%
C2
0.1uF
C1
0.1uF
10K
R1
GND
GND
GND

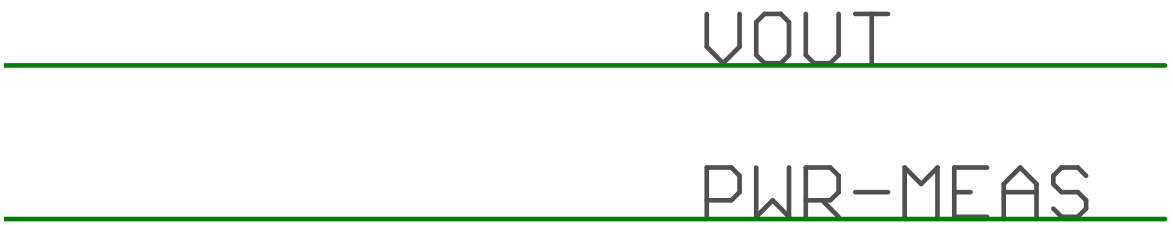

B

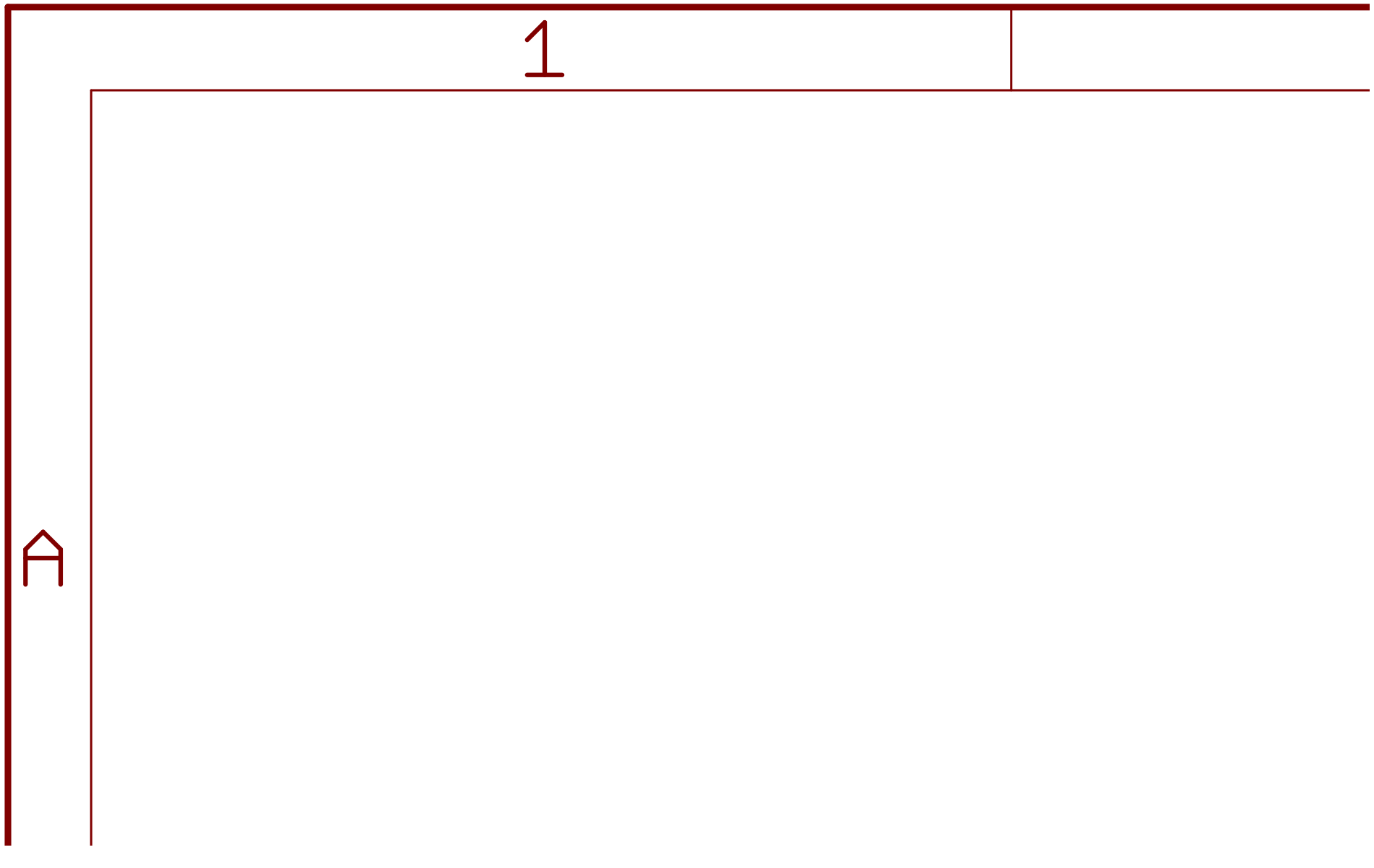
1
A

2

3

PWR-M

PWR-M

SWITCHED

EAS = Iload * Rload * Rshunt / 1000

EAS = 1Volt per1 Amp

6

A