PWR-MEAS = Iload * Rload * Rshunt / 1000

PWR-MEAS = 1Volt per1 Amp

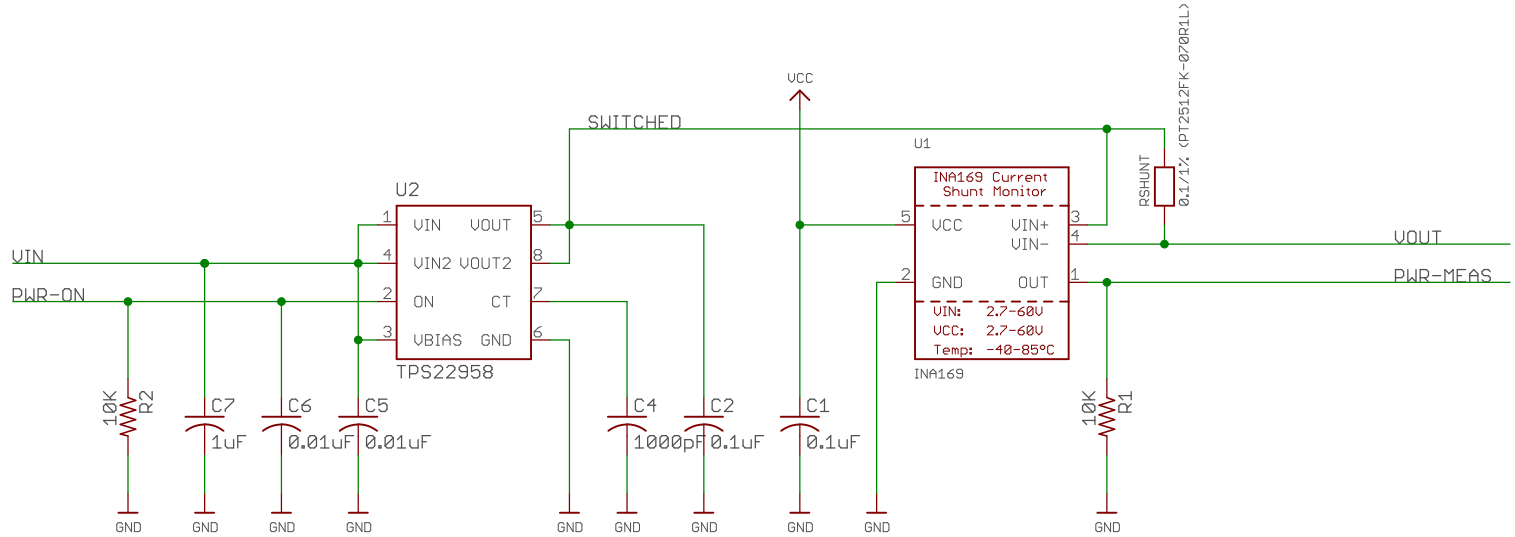

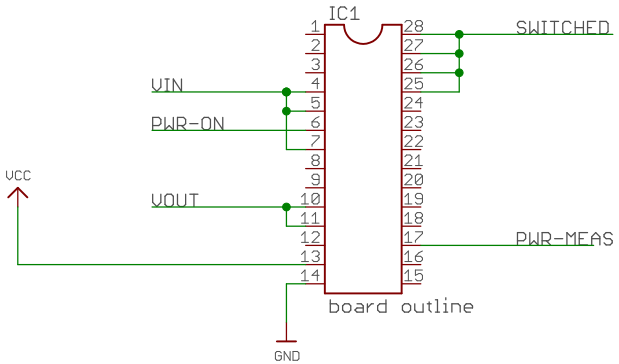

Destroyed by J. Garlick, Jan 2017

Adafruit INA169 CurPowerMonitor	
1/16/17 12:17 PM	Sheet: 1/1
Drawing: >AUTHOR	Adafruit Industries