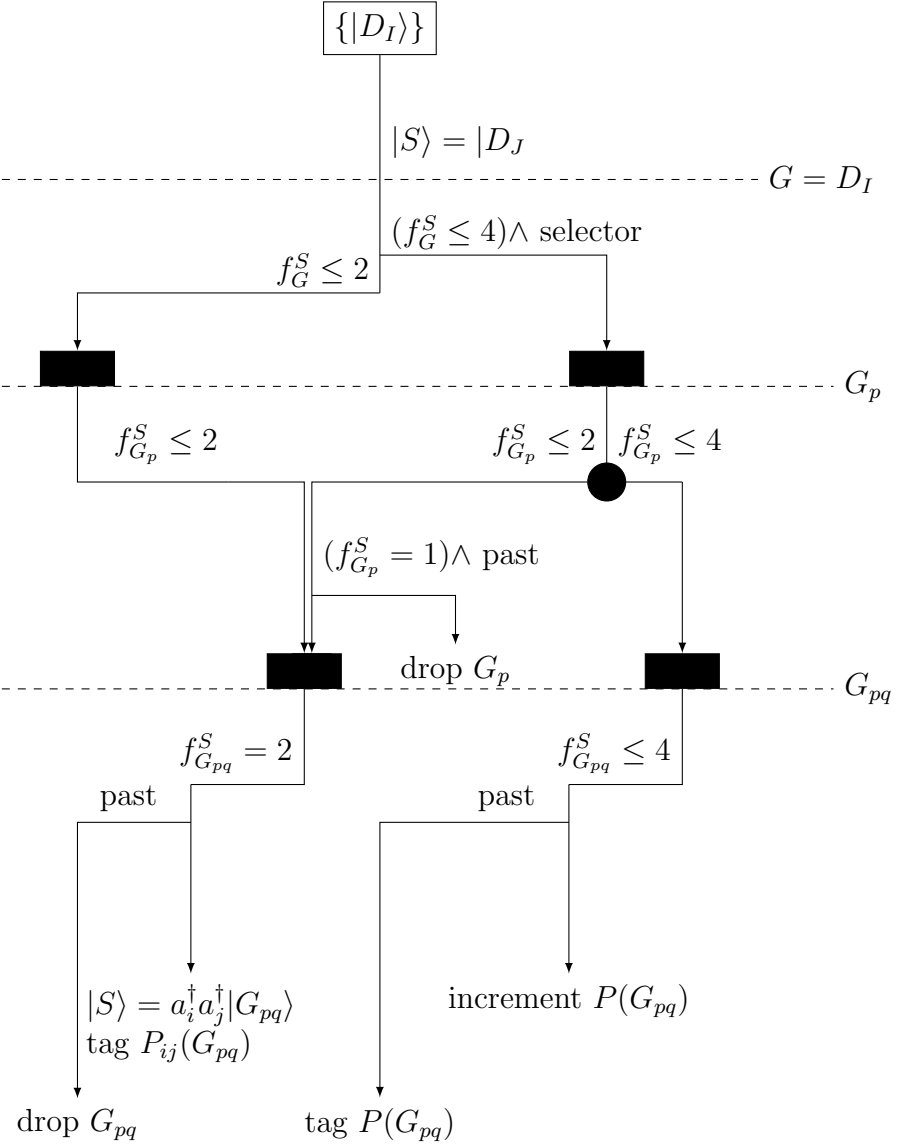

S : determinant in $\{|D_I\rangle\}$
G : generator
G_p : singly ionized generator
G_{pq} : doubly ionized generator
past : $J < I$, so S has already been treated as a generator
selector : S is a selector
f_X^S : Excitation degree between X and S

- - - X : loop over all possible X
$\xrightarrow{c}$: path taken if c is true
drop X : cycle loop over X

: Filtered list of determinants to be used in the inner loop

: Possible duplication of S