RTCA, Inc.

1828 L Street, NW Suite 805

Washington, DC 20036

RTCA/DO-160G

Environmental Conditions and Test Procedures for Airborne Equipment

Section 14

Salt Fog

Important Notice

Information contained in these sections is pertinent to all test procedures described in the other sections of this document. Further, Appendix A is applicable for identifying environmental tests performed.

Date of Issue:
December 8, 2010

Supersedes: RTCA/DO-160F
Prepared by: SC-135

Copyright RTCA, Inc.
Provided by IHS under license with RTCA, Inc.
No reproduction or networking permitted without license from IHS

Order Number: 02093010
Sold to:ETIHAD AIRWAYS ENGINEERING [048289110575] - MKURUVILLA@ETIHAD.AE,
Not for Resale,2016-02-16 13:45:42 UTC

14.0 SALT FOG 14-1
14.1 Purpose of the Test 14-1
14.2 Categories of Equipment 14-1
14.3 Apparatus 14-1
14.3.1 Chamber 14-1
14.3.2 Atomizers 14-2
14.3.3 Air Supply 14-2
14.3.4 Preparation of Salt Solution 14-2
14.3.4.1 Adjustment of pH 14-3
14.3.5 Filter 14-3
14.3.6 Test Procedure 14-3
14.3.6.1 Temperature 14-3
14.3.6.2 Atomization 14-3
14.3.6.3 Placement of Salt Fog Collection Receptacles 14-4
14.3.6.4 Measurement of Salt Solution 14-4
14.3.6.4.1 Measurement of Sodium Chloride Content 14-4
14.3.6.4.2 Measurement of pH 14-4
14.3.6.4.3 Time of Measurements 14-4
14.3.6.5 Preparation of Test Item 14-4
14.3.6.6 Performance of Normal Salt Fog Test (Category S) 14-5
14.3.6.7 Performance of Severe Salt Fog Test (Category T) 14-5
14.3.6.8 Failure Considerations 14-5

Figure 14-1 Relative Density Variations of the Salt Solution with Temperature 14-7
Figure 14-2 Location of Salt Solution Filter 14-8

Copyright RTCA, Inc.
Provided by IHS under license with RTCA, Inc.
No reproduction or networking permitted without license from IHS

Order Number: 02093010
Sold to:ETIHAD AIRWAYS ENGINEERING [048289110575] - MKURUVILLA@ETIHAD.AE,
Not for Resale,2016-02-16 13:45:42 UTC

14.0 Salt Fog

14.1 Purpose of the Test

This test determines the effects on the equipment of prolonged exposure to a salt atmosphere or to salt fog experienced in normal operations.

The main adverse effects to be anticipated are:

a. Corrosion of metals.
b. Clogging or binding of moving parts as a result of salt deposits.
c. Insulation fault.
d. Damage to contacts and uncoated wiring.

Note: The salt fog test shall not be conducted prior to the fungus resistance test (see Subsection 3.2, "Order of Tests").

14.2 Categories of Equipment

Category S

When the equipment is installed in locations where it is subjected to a corrosive atmosphere in the course of normal aircraft operations, the equipment is identified as Category S and the salt fog test is applicable.

Category T

When the equipment is installed in locations where it is subjected to a severe salt atmosphere, such as equipment exposed directly to external unfiltered air on hovering aircraft that may operate or be parked near the sea, the equipment is identified as category T and the severe salt fog test is applicable..

14.3 Apparatus

The apparatus used in the salt fog test shall include the following:

a. Exposure chamber with racks for supporting test items.

b. A salt solution reservoir with means for maintaining an adequate level of solution.

c. A means for atomizing the salt solution, including suitable nozzles and compressed air supply.

d. A means of heating and controlling chamber temperature.

e. A means for humidifying the air at temperatures above the chamber temperature.

14.3.1 Chamber

© 2010 RTCA, Inc.

Copyright RTCA, Inc.
Provided by IHS under license with RTCA, Inc.
No reproduction or networking permitted without license from IHS

Order Number: 02093010
Sold to:ETIHAD AIRWAYS ENGINEERING [048289110575] - MKURUVILLA@ETIHAD.AE,
Not for Resale,2016-02-16 13:45:42 UTC

The chamber and all accessories shall be made of material that will not affect the corrosiveness of the fog, e.g. glass, hard rubber, plastic or kiln-dried wood other than plywood. In addition, all parts that come in contact with test items shall be made of materials that will not cause electrolytic corrosion. The chamber and accessories shall be constructed and arranged so that there is no direct impingement of the fog or dripping of the condensate on the test items; the fog circulates freely about all test items to the same degree, and no liquid that has come in contact with the test item returns to the salt-solution reservoir. The chamber shall be properly vented to prevent pressure build-up and allow uniform distribution of the salt fog. The discharge end of the vent shall be protected from strong drafts to prevent strong air currents in the test chamber.

14.3.2 Atomizers

The atomizers shall be designed and constructed to produce a finely divided, wet, dense fog. Atomizing nozzles shall be made of materials that are non-reactive to the salt solution.

14.3.3 Air Supply

The compressed air entering the atomizers shall be essentially free from all impurities, such as oil and dirt. Means shall be provided to humidify and warm the compressed air as required to meet the operating conditions. The air pressure shall be suitable to produce a finely divided dense fog with the atomizer or atomizers used. To avoid clogging the atomizers with salt deposition, the air should have a relative humidity of at least 85 percent at the point of release from the nozzle. A satisfactory method is to pass the air in very fine bubbles through a tower containing heated water that is automatically maintained at a constant level. The temperature of the water should be at least 35 degrees C. The permissible water temperature increases with the increasing volume of air and with the decreasing heat insulation of the chamber and the chamber's surroundings. However, the temperature should not exceed a value above which excessive moisture is introduced into the chamber (for example 43 degrees C at an air pressure of 84 kPa) or a value that makes it impossible to meet the requirements for operating temperature.

14.3.4 Preparation of Salt Solution

The salt shall be sodium chloride containing on the dry basis not more than 0.1 percent sodium iodide and not more than 0.5 percent of total impurities. Unless otherwise specified, a five ±1 percent solution shall be prepared by dissolving five parts by weight of salt in 95 parts by weight of distilled or demineralized water. The solution shall be adjusted to and maintained at a relative density between the limits shown on Figure 14-1 by utilizing the measured temperature and density of the salt solution.

© 2010 RTCA, Inc.

Copyright RTCA, Inc.
Provided by IHS under license with RTCA, Inc.
No reproduction or networking permitted without license from IHS

Order Number: 02093010
Sold to:ETIHAD AIRWAYS ENGINEERING [048289110575] - MKURUVILLA@ETIHAD.AE,
Not for Resale,2016-02-16 13:45:42 UTC

14.3.4.1 Adjustment of pH

The pH of the salt solution shall be maintained and measured daily so that the solution atomized at 35°C and collected by the method specified in subparagraph 14.3.6.3 will be in the pH range of 6.5 to 7.2. Only diluted chemically pure hydrochloric acid or chemically pure sodium hydroxide shall be used to adjust the pH. The pH measurement shall be made electrometrically, using a glass electrode with a saturated potassium chloride bridge, by a colorimetric method such as bromothymol blue or other measuring instruments or litmus paper, provided the results are equivalent to those obtained with the electrometric method. The pH shall be measured when preparing each new batch of solution and as specified in subparagraph 14.3.6.4.

14.3.5 Filter

A filter fabricated of noncorrosive materials similar to that shown in Figure 14-2 shall be provided in the supply line and immersed in the salt solution reservoir as illustrated in Figure 14-2.

14.3.6 Test Procedure

14.3.6.1 Temperature

The test shall be conducted with a temperature in the exposure zone maintained at 35 degrees C. Satisfactory methods for controlling the temperature accurately are by housing the apparatus in a properly controlled constant temperature room, by thoroughly insulating the apparatus and preheating the air to the proper temperature prior to atomization or by jacketing the apparatus and controlling the temperature of the water or of the air used in the jacket. The use of immersion heaters within the chamber for the purpose of maintaining the temperature within the exposure zone is prohibited.

14.3.6.2 Atomization

Suitable atomization has been obtained in chambers having a volume of less than 0.34 m^3 with the following conditions:

a. Nozzle pressure shall be as low as practical to produce fog at the required rate.

b. Orifices shall be between 0.5 mm and 0.8 mm in diameter.

c. Atomization of approximately three liters of salt solution per 0.28 m^3 of chamber volume per 24 hours.

When using large size chambers having a volume considerably in excess of 0.34 m^3, the condition specified may require modification to meet the requirements for operating conditions.

© 2010 RTCA, Inc.

Copyright RTCA, Inc.
Provided by IHS under license with RTCA, Inc.
No reproduction or networking permitted without license from IHS

Order Number: 02093010
Sold to:ETIHAD AIRWAYS ENGINEERING [048289110575] - MKURUVILLA@ETIHAD.AE,
Not for Resale,2016-02-16 13:45:42 UTC

14.3.6.3 Placement of Salt Fog Collection Receptacles

The salt fog conditions maintained in all parts of the exposure zone shall be such that a clean fog-collecting receptacle placed at any point in the exposure zone will collect from 1 to 3 milliliters of solution per hour for each 80 cm^2 of horizontal collecting area (10 cm diameter) based on an average test of at least 16 hours. A minimum of two receptacles shall be used, one placed at the perimeter of the test item nearest to the nozzle, and the other also at this perimeter of the test item but at the farthest point from the nozzle. Receptacles shall be placed so that they are not shielded by test items and so that drops of solution from test items or other sources will not be collected.

14.3.6.4 Measurement of Salt Solution

The solution, collected in the manner specified in subparagraph 14.3.6.3, shall have the sodium chloride content and pH specified in paragraph 14.3.4 when measured at a temperature of 35 degrees C. The salt solution from all collection receptacles used can be combined to provide the quantity required for the measurements specified.

14.3.6.4.1 Measurement of Sodium Chloride Content

The solution, maintained at the specified temperature, can be measured in a graduate of approximately 2.5 cm inside diameter. A small laboratory type hydrometer will be required for measurement within this volume.

14.3.6.4.2 Measurement of pH

The pH shall be measured as specified in paragraph 14.3.4.1.

14.3.6.4.3 Time of Measurements

The measurement of both sodium chloride and pH shall be made at the following times:

a. For salt fog chambers in continuous use, i.e., used within five days, the measurements shall be made following each test.

b. For salt fog chambers that are used infrequently, more than five days since use or if nozzles have been clogged, a 24-hour test run shall be accomplished followed by the measurements. The test item shall not be exposed to this test run.

14.3.6.5 Preparation of Test Item

The test item shall receive minimum handling, particularly on the significant surfaces, and shall be prepared for test immediately before exposure. Unless otherwise specified, uncoated metallic or metallic-coated devices shall be thoroughly cleaned of oil, dirt and grease as necessary until the surface is free from water break. The cleaning methods shall not include the use of corrosive or protective films, nor the use of abrasives other than a paste of pure magnesium oxide. Test items having an organic coating shall not be cleaned with a solvent. Those portions of test items which come in contact with the support and, unless otherwise specified in the case of coated devices or samples, cut edges and surfaces not required to be coated, shall be protected with a suitable coating of wax or similar substance impervious to moisture.

© 2010 RTCA, Inc.

Copyright RTCA, Inc.
Provided by IHS under license with RTCA, Inc.
No reproduction or networking permitted without license from IHS

Order Number: 02093010
Sold to:ETIHAD AIRWAYS ENGINEERING [048289110575] - MKURUVILLA@ETIHAD.AE,
Not for Resale,2016-02-16 13:45:42 UTC

14.3.6.6 Performance of Normal Salt Fog Test (Category S)

Step 1: Continuously atomize a salt solution of a composition as given in 14.3.4 into the test chamber for a period of 24 hours or as specified in the test plan. During the entire exposure period measure the salt fog fallout rate and pH of the fallout solution at least at 24-hour intervals[1/]. Ensure the fallout is between 1 and 3 ml/80cm^2/hr.

Step 2: Dry the test item at standard ambient temperatures and a relative humidity of 50% or less for 24 hours. Do not disturb the test item or adjust any mechanical features during the drying period.

Step 3: At the end of the drying period and unless otherwise specified, replace the test item in the salt fog chamber and perform one repeat of steps 1 and 2.

Step 4: At the end of the drying period, operate the test item and DETERMINE COMPLIANCE WITH APPLICABLE EQUIPMENT PERFORMANCE STANDARDS.

The test item shall then be inspected for corrosion. If necessary, a gentle wash in running water not warmer than 28 degrees C may be used. Any corrosion must be analyzed for its immediate or potential effect on proper functioning of the test item.

14.3.6.7 Performance of the Severe Salt Fog test (Category T)

Step 1: Continuously atomize a salt solution of a composition as given in 14.3.4 into the test chamber for a period of 48 hours or as specified in the test plan. During the entire exposure period measure the salt fog fallout rate and pH of the fallout solution at least at 24-hour intervals[2/]. Ensure the fallout is between 1 and 3 ml/80cm^2/hr.

Step 2: Dry the test item at standard ambient temperatures and a relative humidity of 50% or less for 24 hours. Do not disturb the test item or adjust any mechanical features during the drying period.

Step 3: At the end of the drying period and unless otherwise specified, replace the test item in the salt fog chamber and perform one repeat of steps 1 and 2.

Step 4: Within an hour of removing the equipment from the chamber, power the equipment and allow to dry for 24 hours. Then DETERMINE COMPLIANCE WITH APPLICABLE EQUIPMENT PERFORMANCE STANDARDS.

The test item shall then be inspected for corrosion. Before any dismounting or washing operation, measure and record the insulation or bonding values as defined in the equipment specification. Then, if necessary, a gentle wash in running water not warmer then 28 degrees C may be used. Any corrosion must be analyzed for its immediate or potential effect on proper functioning of the test item.

14.3.6.8 Failure Considerations

[1/] Recommend more frequent intervals. Repeat the interval if fallout quantity requirements are not met.

[2/] Recommend more frequent intervals. Repeat the interval if fallout quantity requirements are not met.

© 2010 RTCA, Inc.

Copyright RTCA, Inc.
Provided by IHS under license with RTCA, Inc.
No reproduction or networking permitted without license from IHS

Order Number: 02093010
Sold to:ETIHAD AIRWAYS ENGINEERING [048289110575] - MKURUVILLA@ETIHAD.AE,
Not for Resale,2016-02-16 13:45:42 UTC

a. Physical. Salt deposits can cause clogging or binding of mechanical components and assemblies. The extent of any deposits resulting from this test may be representative of those induced by anticipated environments.

b. Electrical. Moisture remaining after the 24-hour drying period could cause electrical malfunctions. If so, attempt to relate the malfunctions to that possible in service.

c. Corrosion. Analyze any corrosion for its immediate and potential long-term effects on the proper functioning and structural integrity of the test item.

© 2010 RTCA, Inc.

Copyright RTCA, Inc.
Provided by IHS under license with RTCA, Inc.
No reproduction or networking permitted without license from IHS

Order Number: 02093010
Sold to:ETIHAD AIRWAYS ENGINEERING [048289110575] - MKURUVILLA@ETIHAD.AE,
Not for Resale,2016-02-16 13:45:42 UTC

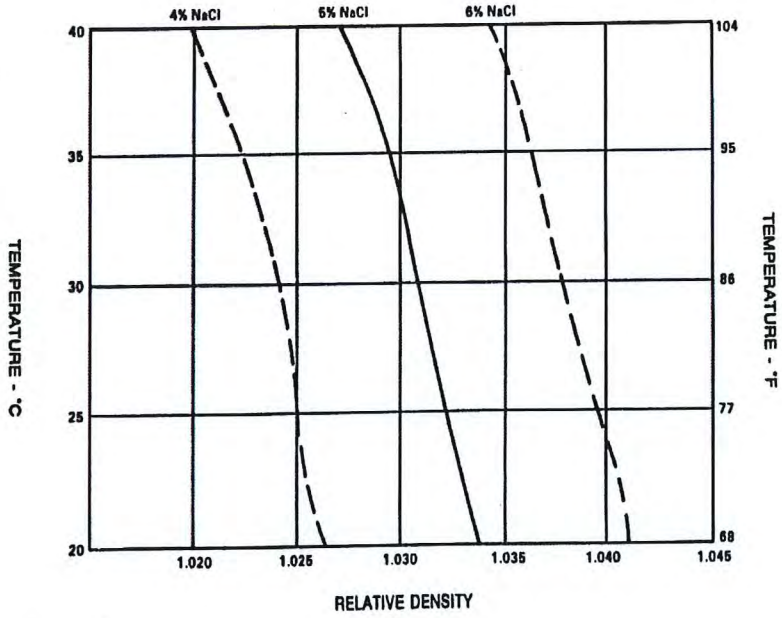

Figure 14-1 Relative Density Variations of the Salt Solution with Temperature

© 2010 RTCA, Inc.

Copyright RTCA, Inc.
Provided by IHS under license with RTCA, Inc.
No reproduction or networking permitted without license from IHS

Order Number: 02093010
Sold to:ETIHAD AIRWAYS ENGINEERING [048289110575] - MKURUVILLA@ETIHAD.AE,
Not for Resale,2016-02-16 13:45:42 UTC

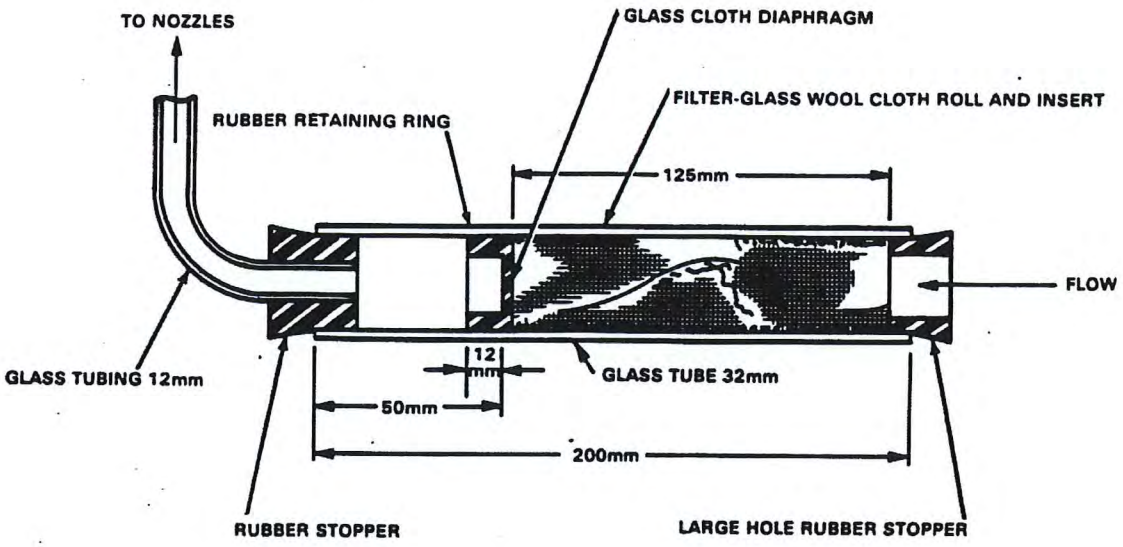

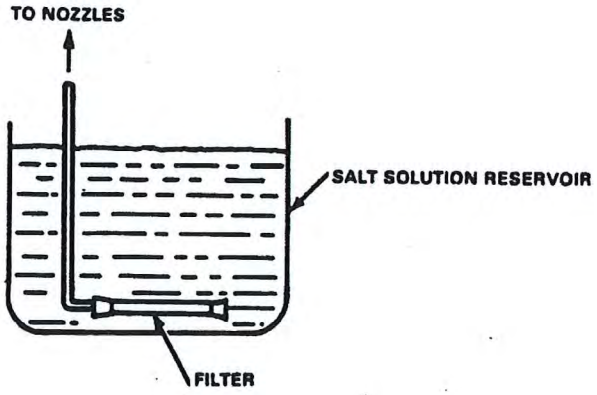

FIGURE 14-2

LOCATION OF SALT SOLUTION FILTER

©2010 RTCA, Inc.

Copyright RTCA, Inc.
Provided by IHS under license with RTCA, Inc.
No reproduction or networking permitted without license from IHS

Order Number: 02093010
Sold to:ETIHAD AIRWAYS ENGINEERING [048289110575] - MKURUVILLA@ETIHAD.AE,
Not for Resale,2016-02-16 13:45:42 UTC