RTCA, Inc.

1828 L Street, NW Suite 805

Washington, DC 20036

RTCA/DO-160G

Environmental Conditions and Test Procedures for Airborne Equipment

Section 17

Voltage Spike

Important Notice

Information pertinent to this test procedure is contained in Sections 1, 2 and 3. Further, Appendix A is applicable for identifying the environmental tests performed.

Date of Issue:
December 8, 2010

Supersedes: RTCA/DO-160F
Prepared by: SC-135

Copyright RTCA, Inc.
Provided by IHS under license with RTCA, Inc.
No reproduction or networking permitted without license from IHS

Order Number: 02093010
Sold to:ETIHAD AIRWAYS ENGINEERING [048289110575] - MKURUVILLA@ETIHAD.AE,
Not for Resale,2016-02-16 13:45:42 UTC

Page

17.0 Voltage Spike 17-1
17.1 Purpose of the Test 17-1
17.2 Equipment Categories 17-1
17.3 Test Setup and Apparatus 17-1
17.4 Test Procedure 17-1

Figure 17-1 Voltage Spike Waveform 17-2
Figure 17-2 Voltage Spike Test Setup DC and Single phase AC (Typical) 17-3
Figure 17-3 Voltage Spike Test Setup Three phase AC (Typical) 17-4

Copyright RTCA, Inc.
Provided by IHS under license with RTCA, Inc.
No reproduction or networking permitted without license from IHS

Order Number: 02093010
Sold to:ETIHAD AIRWAYS ENGINEERING [048289110575] - MKURUVILLA@ETIHAD.AE,
Not for Resale,2016-02-16 13:45:42 UTC

17.0 Voltage Spike

17.1 Purpose of the Test

This test determines whether the equipment can withstand the effects of voltage spikes arriving at the equipment on its power leads, either ac or dc. The main adverse effects to be anticipated are:

a. Permanent damage, component failure, insulation breakdown.

b. Susceptibility degradation, or changes in equipment performance.

17.2 Equipment Categories

Category A

Equipment intended primarily for installation where a high degree of protection against damage by voltage spikes is required is identified as Category A.

Category B

Equipment intended primarily for installations where a lower standard of protection against voltage spikes is acceptable is identified as Category B.

17.3 Test Setup and Apparatus

The transient generator used shall produce the waveform shown in Figure 17-1. A typical test setup is shown in Figure 17-2. Any method of generating the spike may be used if the waveform complies with Figure 17-1.

17.4 Test Procedure

With the equipment under test disconnected, the transient wave shape shall be verified to be in accordance with Figure 17-1.

With the equipment operating at its design voltage(s), apply to each primary power input a series of positive and negative spikes described in Figure 17-1. In the case where multiple power inputs are supplied by the same bus, all connections for these inputs shall be tested simultaneously. Apply a minimum of 50 positive polarity transients within a period of one minute. Repeat the application with 50 negative polarity transients within a one minute period. The time between positive and negative transient applications is not germane to the intent of the test, and is left to the discretion of the tester. Repeat the test for each operating mode or function of the equipment.

After application of the spikes, DETERMINE COMPLIANCE WITH APPLICABLE EQUIPMENT PERFORMANCE STANDARDS.

NOTE: If performance is measured during the application of this test, then the performance requirements contained in the applicable equipment performance standard apply.

© 2010 RTCA, Inc.

Copyright RTCA, Inc.
Provided by IHS under license with RTCA, Inc.
No reproduction or networking permitted without license from IHS

Order Number: 02093010
Sold to:ETIHAD AIRWAYS ENGINEERING [048289110575] - MKURUVILLA@ETIHAD.AE,
Not for Resale,2016-02-16 13:45:42 UTC

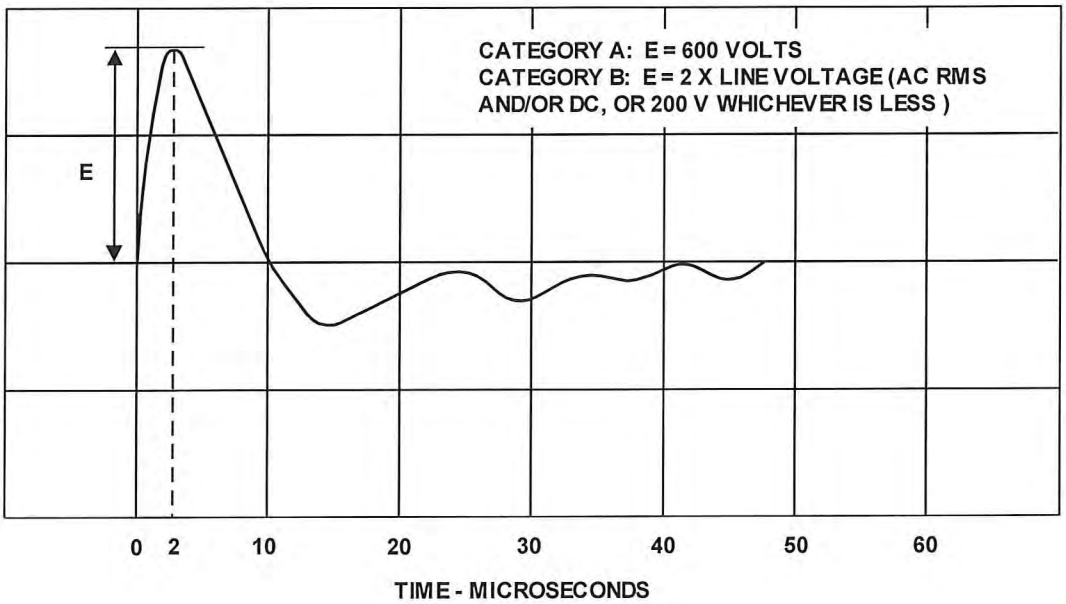

THE GENERATOR SOURCE IMPEDANCE SHALL BE 50Ω NOMINAL. THE SPECIFIED VOLTAGE AND DURATIONS ARE FOR OPEN CIRCUIT CONDITIONS ONLY. THE PEAK VOLTAGE MAY BE SUBSTANTIALLY LOWER WITH THE EQUIPMENT CONNECTED. THE GENERATOR SOURCE IMPEDANCE SHALL BE VERIFIED BY TESTING WITH A 50Ω ±10% LOAD RESISTOR, AND SHALL PRODUCE ONE HALF OF THE SPECIFIED VOLTAGE ±10%.

Note: The waveform shown above is typical. The waveform requirement is accomplished if the pulse rise time is less than or equal to 2μsec and the total pulse duration is at least 10μsec.

Figure 17-1 Voltage Spike Waveform

© 2010 RTCA, Inc.

Copyright RTCA, Inc.
Provided by IHS under license with RTCA, Inc.
No reproduction or networking permitted without license from IHS

Order Number: 02093010
Sold to:ETIHAD AIRWAYS ENGINEERING [048289110575] - MKURUVILLA@ETIHAD.AE,
Not for Resale,2016-02-16 13:45:42 UTC

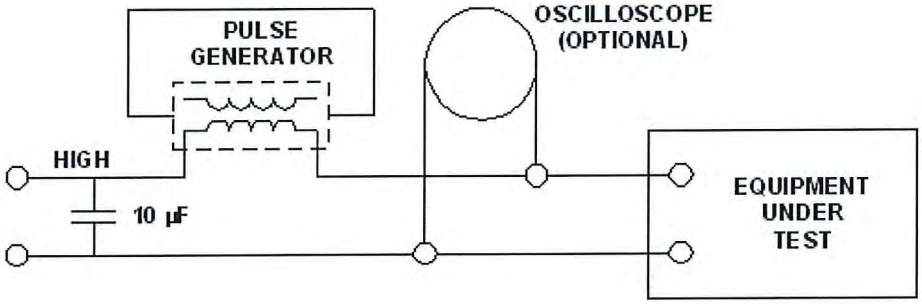

NOTE: FOR EQUIPMENTS DRAWING HIGH CURRENTS, ALTERNATE TEST METHODS MAY BE REQUIRED (To avoid saturating transformer etc.).

Figure 17-2 Voltage Spike Test Setup, DC or single phase AC

© 2010 RTCA, Inc.

Copyright RTCA, Inc.
Provided by IHS under license with RTCA, Inc.
No reproduction or networking permitted without license from IHS

Order Number: 02093010
Sold to:ETIHAD AIRWAYS ENGINEERING [048289110575] - MKURUVILLA@ETIHAD.AE,
Not for Resale,2016-02-16 13:45:42 UTC

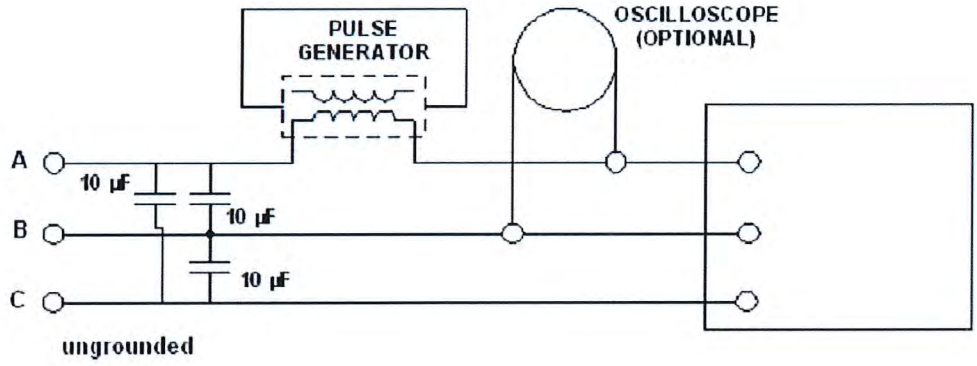

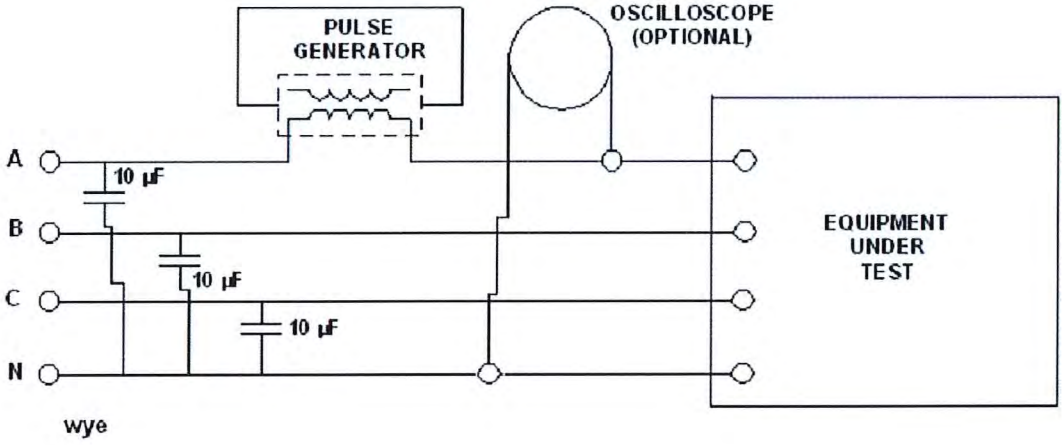

NOTE: FOR EQUIPMENTS DRAWING HIGH CURRENTS, ALTERNATE TEST METHODS MAY BE REQUIRED (To avoid saturating transformer etc.).

Figure 17-3 Voltage Spike Test Setup, three phase AC

© 2010 RTCA, Inc.

Copyright RTCA, Inc.
Provided by IHS under license with RTCA, Inc.
No reproduction or networking permitted without license from IHS

Order Number: 02093010
Sold to:ETIHAD AIRWAYS ENGINEERING [048289110575] - MKURUVILLA@ETIHAD.AE,
Not for Resale,2016-02-16 13:45:42 UTC