RTCA, Inc.

1828 L Street, NW Suite 805

Washington, DC 20036

RTCA/DO-160G

Environmental Conditions and Test Procedures for Airborne Equipment

Section 18

Audio Frequency Conducted Susceptibility

Important Notice

Information contained in these sections is pertinent to all test procedures described in the other sections of this document. Further, Appendix A is applicable for identifying environmental tests performed.

Date of Issue:
December 8, 2010

Supersedes: RTCA/DO-160F
Prepared by: RTCA SC-135

Copyright RTCA, Inc.
Provided by IHS under license with RTCA, Inc.
No reproduction or networking permitted without license from IHS

Order Number: 02093010
Sold to:ETIHAD AIRWAYS ENGINEERING [048289110575] - MKURUVILLA@ETIHAD.AE,
Not for Resale,2016-02-16 13:45:42 UTC

18.0 AUDIO FREQUENCY CONDUCTED SUSCEPTIBILITY - POWER INPUTS (CLOSED CIRCUIT TEST) 18-1

18.1 Purpose of the Test 18-1

18.2 Equipment Categories and Frequency Classes 18-1
18.2.1 Equipment Categories 18-1

18.3 Test Procedures 18-2
18.3.1 DC Input Power Leads 18-2
18.3.2 AC Input Power Leads 18-2
18.3.3 Frequency Scan Rates 18-4

18.4 General Remarks 18-4

Figure 18-1 Test Setup for Audio Frequency Conducted Susceptibility Test (For AC and DC Power Lines, Differential Mode) 5
Figure 18-2 Test Setup for Audio Frequency Conducted Susceptibility Test (For 270V DC Power Lines, Common Mode) 6
Figure 18-3 Frequency Characteristics of Ripple in 28 & 270 Volt DC Electric System — Categories R, K, & Z 7
Figure 18-4 Frequency Characteristics of Ripple in 28 Volt DC Electric System — Category B 8

© 2010 RTCA, Inc

Copyright RTCA, Inc.
Provided by IHS under license with RTCA, Inc.
No reproduction or networking permitted without license from IHS

Order Number: 02093010
Sold to:ETIHAD AIRWAYS ENGINEERING [048289110575] - MKURUVILLA@ETIHAD.AE,
Not for Resale,2016-02-16 13:45:42 UTC

18.0 Audio Frequency Conducted Susceptibility - Power Inputs (Closed Circuit Test)

18.1 Purpose of the Test

This test determines whether the equipment will accept frequency components of a magnitude normally expected when the equipment is installed in the aircraft. These frequency components are normally harmonically related to the power source fundamental frequency.

18.2 Equipment Categories and Frequency Classes

18.2.1 Equipment Categories

Test designation for equipment consists of:

Category reference:

- For ac equipment: R(CF), R(NF) or R(WF)
- For dc equipment: R, B, or Z

Categories R(CF), R(NF), R(WF) and R

Equipment intended for use on aircraft electrical systems where the primary power is from a constant or variable frequency ac system and where the dc system is supplied from transformer-rectifier units, is identified as:

- for ac equipment: Category R(CF), R(NF) or R(WF),
- for dc equipment: Category R.

Category B

Dc equipment intended for use on aircraft electrical systems supplied by engine-driven alternator/rectifiers, or dc generators where a battery of significant capacity is floating on the dc bus at all times, is identified as Category B. Unless otherwise specified, tests levels for 14 Vdc equipment are half those shown for 28 Vdc equipment.

Category Z

Dc equipment that may be used on all other types of aircraft electrical systems applicable to these standards is identified as Category Z. Category Z shall be acceptable for use in place of Category R or B. Examples of this category are dc systems supplied from variable-speed generators where:

a. The dc power supply does not have a battery floating on the dc bus, or

b. Control or protective equipment may disconnect the battery from the dc bus, or.

c. The battery capacity is small compared with the capacity of the dc generators.

Category K

Equipment intended for use on aircraft electrical systems where the primary power is from a constant or variable frequency ac system and characterized by a voltage distortion level higher than the one for the ac supplies applied on category R equipment.

Category K shall be acceptable for use in place of Category R.

© 2010 RTCA, Inc

Copyright RTCA, Inc.
Provided by IHS under license with RTCA, Inc.
No reproduction or networking permitted without license from IHS

Order Number: 02093010
Sold to:ETIHAD AIRWAYS ENGINEERING [048289110575] - MKURUVILLA@ETIHAD.AE,
Not for Resale,2016-02-16 13:45:42 UTC

18.3 Test Procedures

Unless otherwise specified, the EUT shall be supplied at the nominal input voltage during performance of the following tests.

18.3.1 DC Input Power Leads

a. For Categories R, B, and Z, connect the equipment under test as shown in Figure 18-1. While the equipment is operating, apply a sine wave audio frequency signal successively in series with each ungrounded dc input power lead. While varying the audio frequency of the applied signal and with the peak-to-peak amplitude of this signal at the value specified in Figure 18-3 or Figure 18-4, (as appropriate) and while scanning at the rate specified in 18.3.3, DETERMINE COMPLIANCE WITH APPLICABLE EQUIPMENT PERFORMANCE STANDARDS. Repeat this test for all operating modes as specified in 18.3.3.

b For 270V Category Z, connect the equipment under test as shown in Figure 18-1 with the 270V negative lead(s) attached to ground. While the equipment is operating, apply a sine wave audio frequency signal successively in series with each positive dc input power lead. Unless otherwise specified in the applicable performance standards, the negative lead shall be connected to ground for this test. While varying the audio frequency of the applied signal and with the peak to peak amplitude of this signal at the value specified in Figure 18-3 and while scanning at the rate specified in 18.3.3, DETERMINE COMPLIANCE WITH APPLICABLE EQUIPMENT PERFORMANCE STANDARDS. Repeat this test for all operating modes as specified in 18.3.3.

c. For 270V Category Z equipment, connect the equipment under test as shown in Figure 18-2, and repeat test category over the required frequency range with voltage ripple applied common mode for all 270V dc equipment. (Note that the negative lead(s) is connected to ground through the coupling transformer). The common mode test level is to be twice the differential test level (Figure 18-3). While scanning at the rate specified in 18.3.3 DETERMINE COMPLIANCE WITH APPLICABLE EQUIPMENT PERFORMANCE STANDARDS. Repeat this test for all operating modes as specified in 18.3.3.

18.3.2 AC Input Power Leads

a. For R(CF) and K category Equipment

Connect the equipment under test as shown in Figure 18-1. While the equipment is operating, apply a sine wave audio frequency signal successively in series with each ungrounded ac input power lead. While varying the frequency of the applied signal between 700 Hz and 16 kHz, DETERMINE COMPLIANCE WITH APPLICABLE EQUIPMENT PERFORMANCE STANDARDS. . Repeat this test for all operating modes as specified in 18.3.3.

For R(CF) Category equipment, maintain the rms amplitude of this signal at not less than 6% of the maximum normal ac input voltage and while scanning at the rate specified in 18.3.3, DETERMINE COMPLIANCE WITH APPLICABLE EQUIPMENT PERFORMANCE STANDARDS. Repeat this test for all operating modes as specified in 18.3.3.

For K Category equipment, maintain the rms amplitude of this signal at not less than 8% of the maximum normal ac input voltage up to 7.6 kHz and 6% above 7.6 kHz, and while scanning at the rate specified in 18.3.3, DETERMINE COMPLIANCE WITH APPLICABLE EQUIPMENT PERFORMANCE STANDARDS. Repeat this test for all operating modes as specified in 18.3.3

© 2010 RTCA, Inc.

Copyright RTCA, Inc.
Provided by IHS under license with RTCA, Inc.
No reproduction or networking permitted without license from IHS

Order Number: 02093010
Sold to:ETIHAD AIRWAYS ENGINEERING [048289110575] - MKURUVILLA@ETIHAD.AE,
Not for Resale,2016-02-16 13:45:42 UTC

b. For R(NF) and K category equipment:

(1) Connect the equipment under test as shown in Figure 18-1. While equipment operating with a power source frequency of 360 Hz +5/-0 Hz, apply a sine wave audio frequency signal successively in series with each ungrounded ac input power lead, while varying the frequency of the applied signal between 700 Hz and 26 kHz.

For R(NF) Category equipment, maintain the rms amplitude of this signal at not less than 6% of the maximum normal ac input voltage, and while scanning at the rate specified in 18.3.3, DETERMINE COMPLIANCE WITH APPLICABLE EQUIPMENT PERFORMANCE STANDARDS. Repeat this test for all operating modes as specified in 18.3.3.

For K Category equipment, maintain the rms amplitude of this signal at not less than 8% of the maximum normal ac input voltage up to 12.4 kHz and 6% above 12.4 kHz, and while scanning at the rate specified in 18.3.3, DETERMINE COMPLIANCE WITH APPLICABLE EQUIPMENT PERFORMANCE STANDARDS. Repeat this test for all operating modes as specified in 18.3.3.

(2) Repeat test (1) with a power source frequency of 650 Hz +0/-5 Hz while varying the frequency of the applied signal between 1100 Hz and 32 kHz.

c. For R(WF) and K category equipment:

(1) Connect the equipment under test as shown in Figure 18-1. While equipment operating with a power source frequency of 360 +5/-0 Hz, apply a sine wave audio frequency signal successively in series with each ungrounded ac input power lead, while varying the frequency of the applied signal between 700 Hz and 32 kHz.

For Category R(WF) and K Category equipment, maintain the rms amplitude of this signal at not less than 8% of the maximum normal ac input voltage up to 15.2 kHz and 6 % above 15.2 kHz, and while scanning at the rate specified in 18.3.3, DETERMINE COMPLIANCE WITH APPLICABLE EQUIPMENT PERFORMANCE STANDARDS. Repeat this test for all operating modes as specified in 18.3.3.

(2) Repeat test (1) with a power source frequency of 800 Hz +0/-5 Hz while varying the frequency of the applied signal between 1400 Hz and 32 kHz.

© 2010 RTCA, Inc

Copyright RTCA, Inc.
Provided by IHS under license with RTCA, Inc.
No reproduction or networking permitted without license from IHS

Order Number: 02093010
Sold to:ETIHAD AIRWAYS ENGINEERING [048289110575] - MKURUVILLA@ETIHAD.AE,
Not for Resale,2016-02-16 13:45:42 UTC

18.3.3 Frequency Scan Rates

For test equipment that generate discrete frequencies the minimum number of test frequencies shall be 30 frequencies per decade. The test frequencies shall be logarithmically spaced. As an example, a formula that can be used to calculate these frequencies for 30 steps per decade in ascending order is:

$$f_{n+1} = f_1 * 10^{(n/30)} \pm 1\%$$

Where

f_n is a test frequency and n = 1 to m
f_1 is the start frequency
f_m is the end frequency
$m = 1 + 30*\log(f_m/f_1)$.

The dwell time at each test frequency shall be at least one minute, exclusive of test equipment settling time. If the last test step for F_{n+1} yields a frequency greater than f_m, round down to f_m.

For test equipment that generate a continuous linear frequency sweep, the minimum (i.e., fastest) sweep rate shall be equal to the number of discrete frequencies per decade (m) multiplied by two times the dwell time, i.e., 30 discrete frequencies per decade times 2 times 1 minute dwell time equals 60 minutes per decade sweep rate.

These tests shall be performed for the equipment operating modes that draw maximum steady state current and minimum steady state current from the prime power system. Where the ratio between maximum steady state current to minimum steady state current is 2:1 or less, then only one test at maximum steady state current is required.

18.4 General Remarks

a. If the impedance to the test power leads is such that excessive induced current will be required to generate the specified audio signal voltage level, the test conditions will be adequately satisfied if the peak to peak induced current is limited to at least 36 amps. This peak to peak current is in addition to the current the EUT normally draws from the power source.

b. For dc input power leads, paragraph 18.3.1, a large capacitor (100 microfarads or more) shall be connected across the dc power source. For ac input power a 10 microfarad capacitor shall be connected across the power source.

c. Multiple primary power input connections that are intended to be tied in parallel external to the UUT in the installation shall be tested simultaneously.

© 2010 RTCA, Inc.

Copyright RTCA, Inc.
Provided by IHS under license with RTCA, Inc.
No reproduction or networking permitted without license from IHS

Order Number: 02093010
Sold to:ETIHAD AIRWAYS ENGINEERING [048289110575] - MKURUVILLA@ETIHAD.AE,
Not for Resale,2016-02-16 13:45:42 UTC

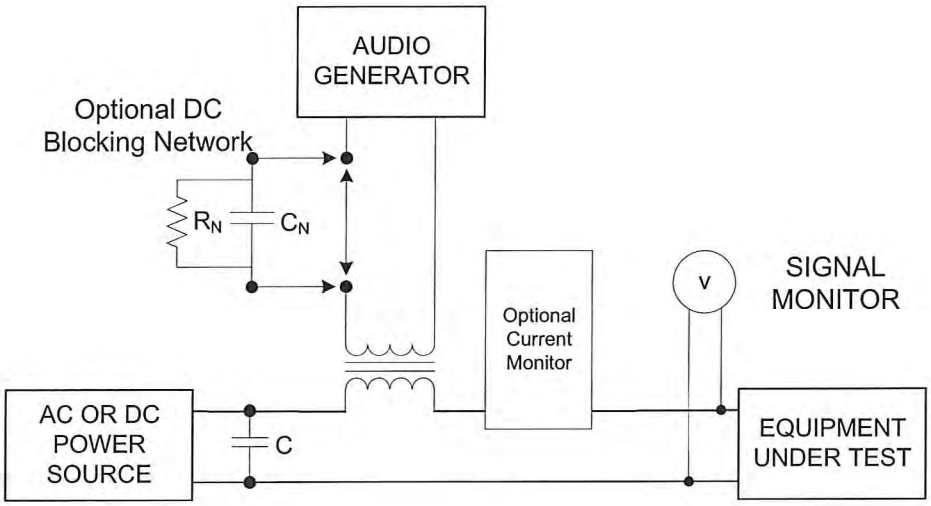

Notes:

C ≥ 100 microfarads for DC power only
C ≥ 8 microfarads for AC power only

The Optional DC Blocking Network (C_N and R_N) shall not affect the achieved test levels

The Optional Current Monitor is intended to measure the AC portion of the audio frequency current, and not the EUT current draw

Figure 18-1 Test Setup for Audio Frequency Conducted Susceptibility Test (For AC and DC Power Lines, Differential Mode)

© 2010 RTCA, Inc

Copyright RTCA, Inc.
Provided by IHS under license with RTCA, Inc.
No reproduction or networking permitted without license from IHS

Order Number: 02093010
Sold to:ETIHAD AIRWAYS ENGINEERING [048289110575] - MKURUVILLA@ETIHAD.AE,
Not for Resale,2016-02-16 13:45:42 UTC

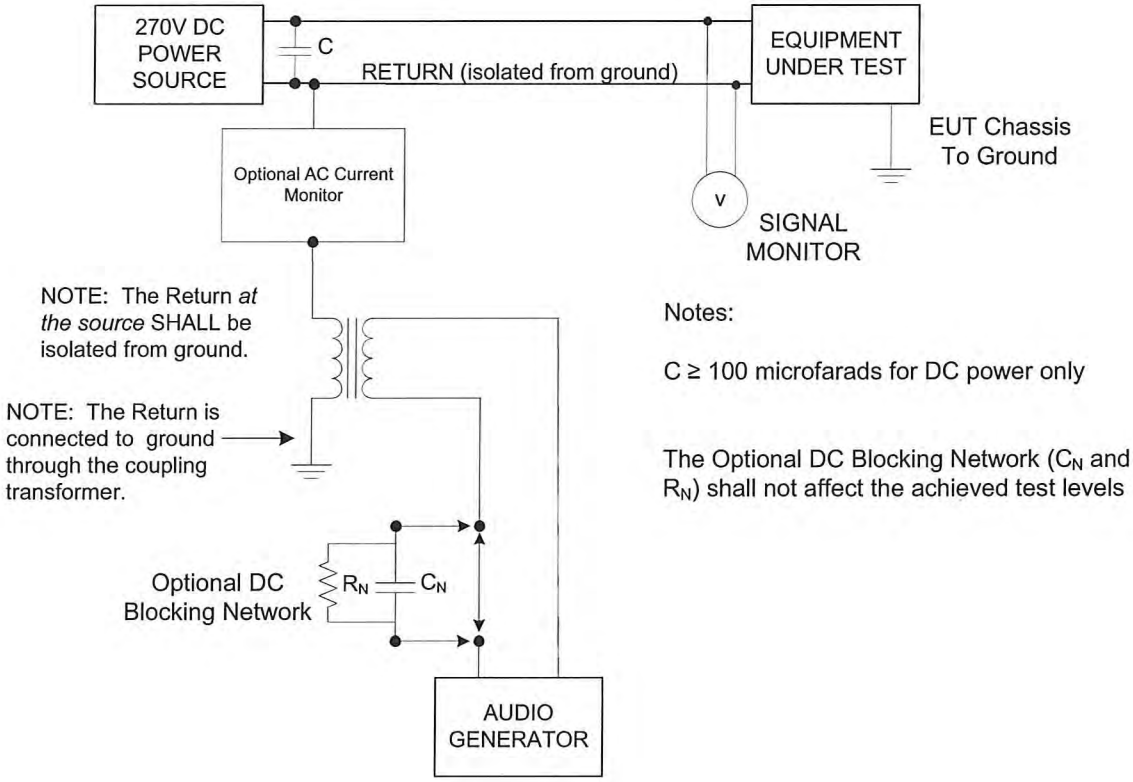

Figure 18-2 Test Setup for Audio Frequency Conducted Susceptibility Test (For 270V DC Power Lines, Common Mode)

© 2010 RTCA, Inc.

Copyright RTCA, Inc.
Provided by IHS under license with RTCA, Inc.
No reproduction or networking permitted without license from IHS

Order Number: 02093010
Sold to:ETIHAD AIRWAYS ENGINEERING [048289110575] - MKURUVILLA@ETIHAD.AE,
Not for Resale,2016-02-16 13:45:42 UTC

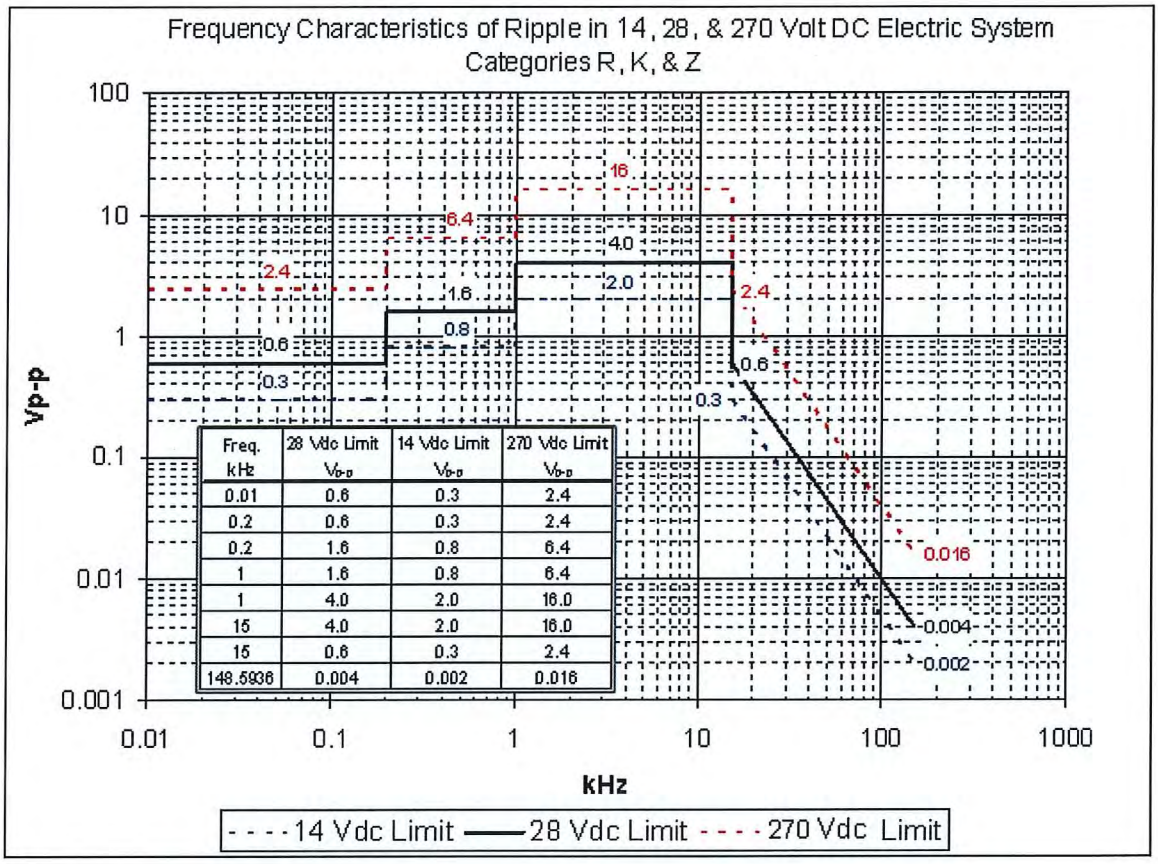

Freq. kHz	28 Vdc Limit V_{p-p}	14 Vdc Limit V_{p-p}	270 Vdc Limit V_{p-p}
0.01	0.6	0.3	2.4
0.2	0.6	0.3	2.4
0.2	1.6	0.8	6.4
1	1.6	0.8	6.4
1	4.0	2.0	16.0
15	4.0	2.0	16.0
15	0.6	0.3	2.4
148.5936	0.004	0.002	0.016

Figure 18-3 Frequency Characteristics of Ripple in 28 & 270 Volt DC Electric System — Categories R, K, & Z

© 2010 RTCA, Inc

Copyright RTCA, Inc.
Provided by IHS under license with RTCA, Inc.
No reproduction or networking permitted without license from IHS

Order Number: 02093010
Sold to:ETIHAD AIRWAYS ENGINEERING [048289110575] - MKURUVILLA@ETIHAD.AE,
Not for Resale,2016-02-16 13:45:42 UTC

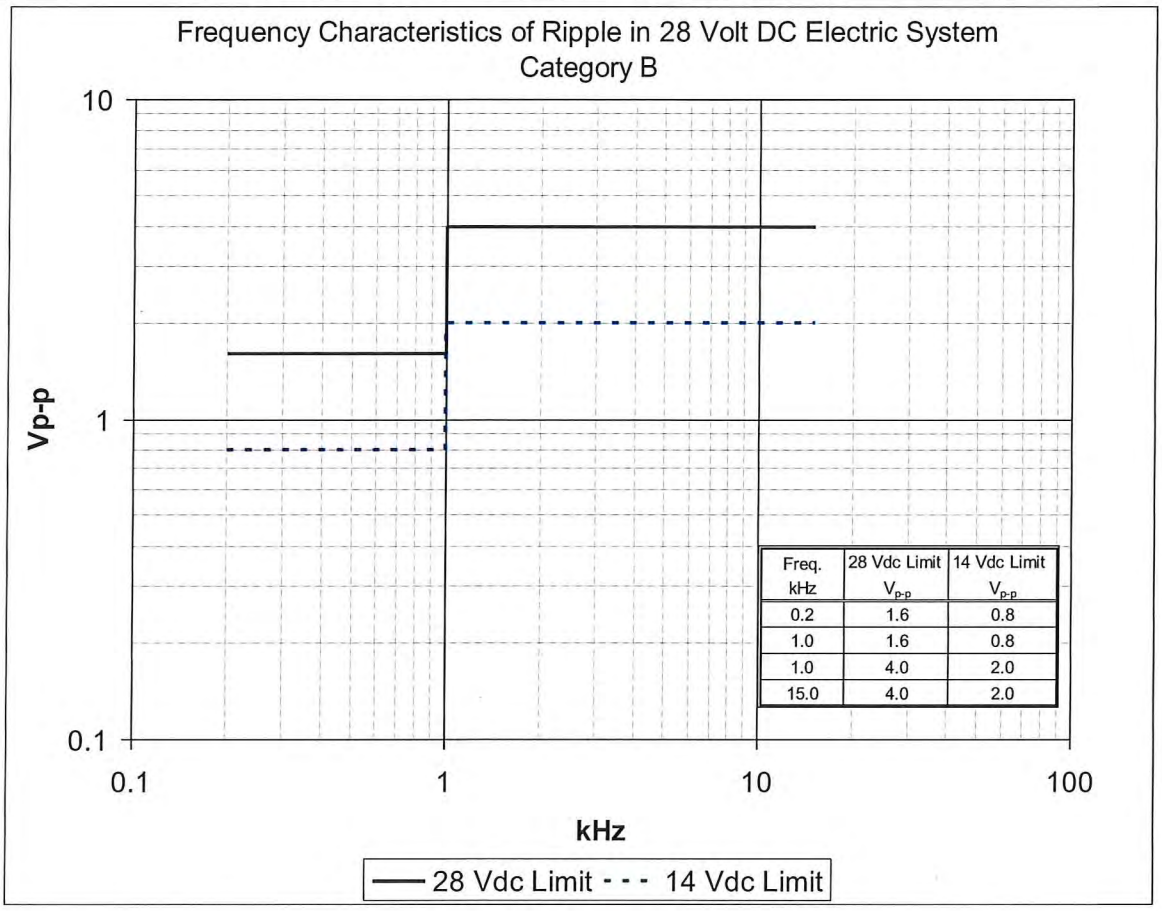

Freq. kHz	28 Vdc Limit V_{p-p}	14 Vdc Limit V_{p-p}
0.2	1.6	0.8
1.0	1.6	0.8
1.0	4.0	2.0
15.0	4.0	2.0

Figure 18-4 Frequency Characteristics of Ripple in 28 Volt DC Electric System — Category B

© 2010 RTCA, Inc.

Copyright RTCA, Inc.
Provided by IHS under license with RTCA, Inc.
No reproduction or networking permitted without license from IHS

Order Number: 02093010
Sold to:ETIHAD AIRWAYS ENGINEERING [048289110575] - MKURUVILLA@ETIHAD.AE,
Not for Resale,2016-02-16 13:45:42 UTC