Microcontroller

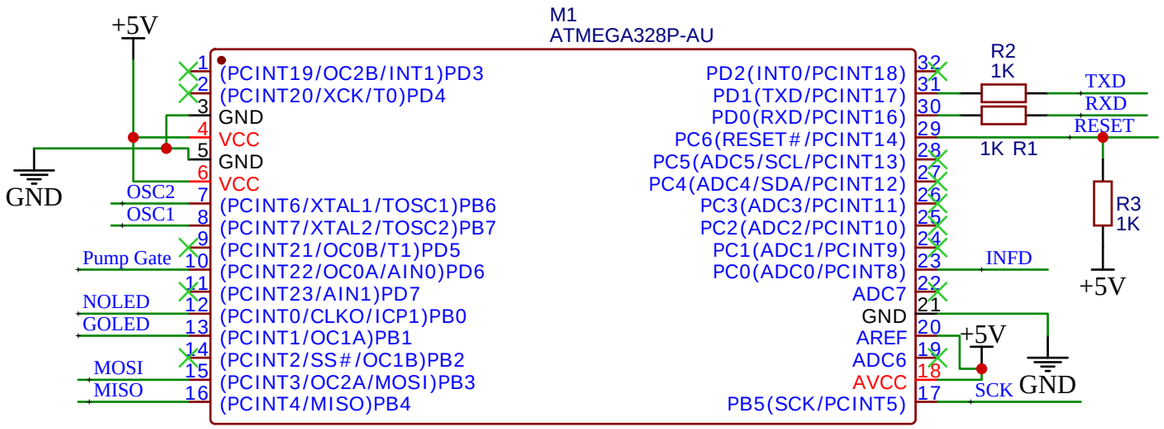

OSC1&2: pins to the 16mhz crystal oscillator to keep time.
NOLED: 5v to power an off-board LED to signal that nothing is dispensed
GOLED: 5v to power an off-board LED to signal that the user may proceed
Pump gate: a Digital signal to pull a transistor high and activate the pump

MOSI,MISO,SCK: programming pins
INFD: Analog read pin between 0-5v of the IR photodiode

Serial to USB

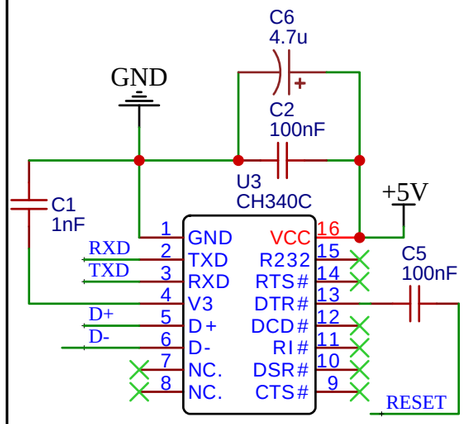

USB Type C Connecter

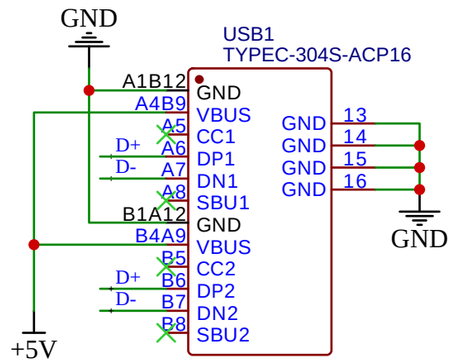

Crystal Oscillator

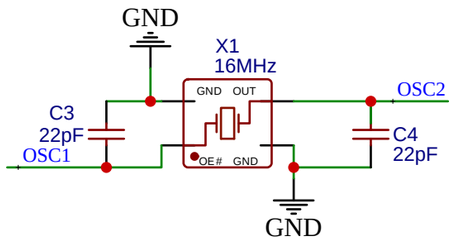

Off board connector

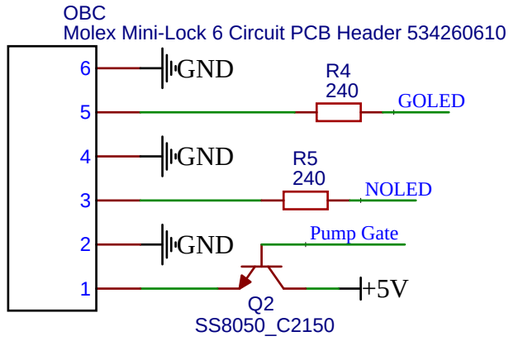

ICSP pins

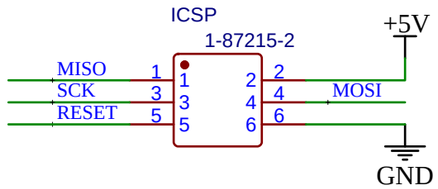

IR photo diode with voltage divider

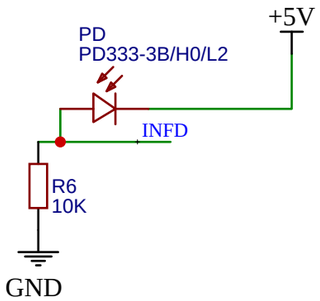

LED1 provides variable resistance to current based on the IR received

IR LED

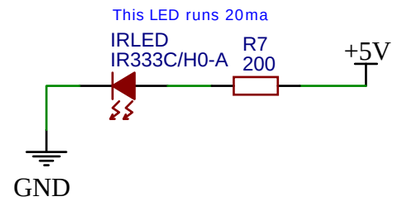

TITLE: SanSpray Prototype 1		REV: 2.0
EasyEDA	Company: Team 3	Sheet: 1/1
	Date: 2020-09-16 Drawn By: Ashton Albright	