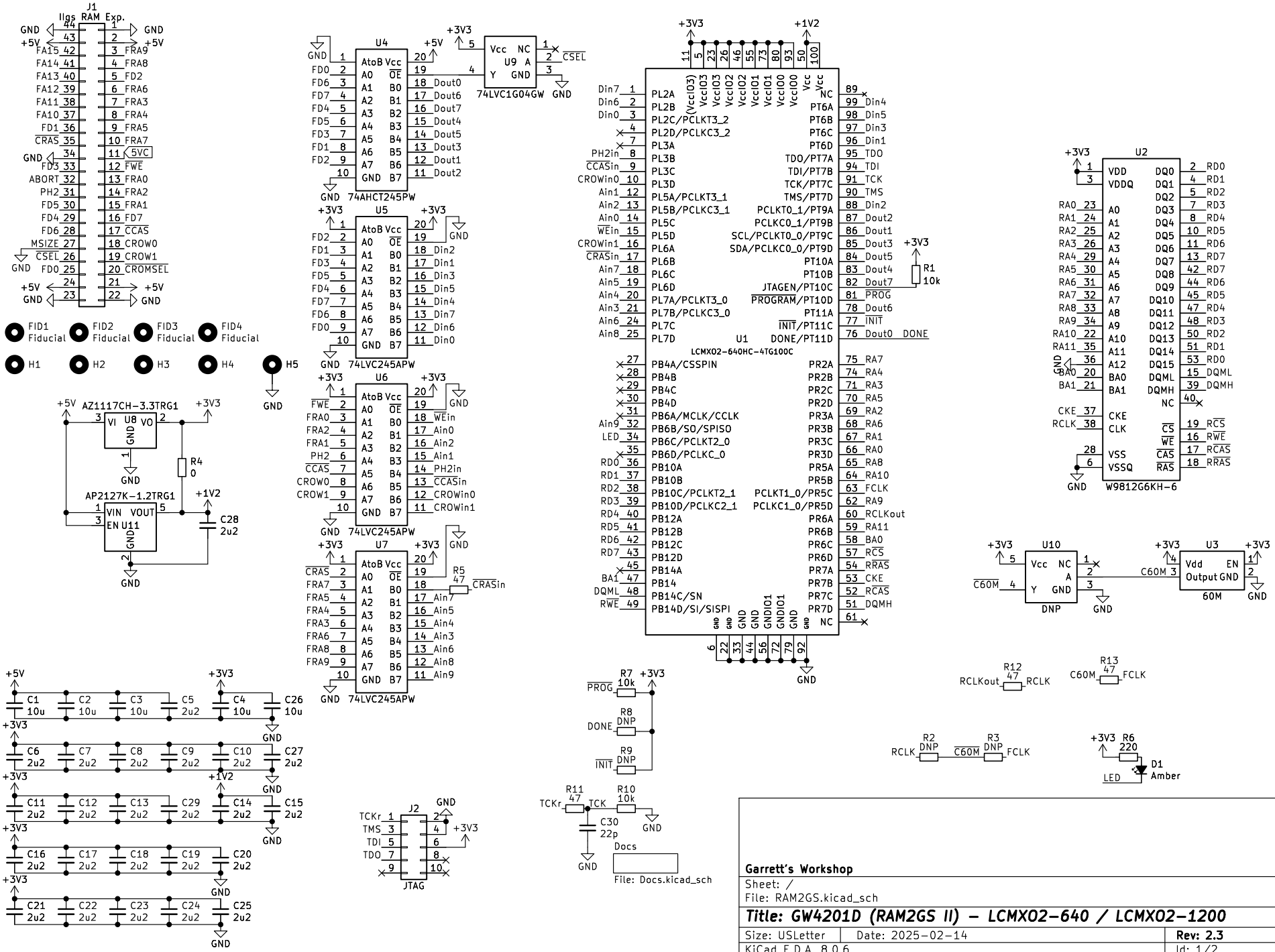
J1
Ilgs RAM Exp.
FID1 Fiducial
FID2 Fiducial
FID3 Fiducial
FID4 Fiducial
H1
H2
H3
H4
H5
AZ1117CH-3.3TRG1
U8
R4 0
AP2127K-1.2TRG1
U11
C28 2u2
U4
74AHCT245PW
74LVC1G04GW
U9
U5
74LVC245APW
U6
U7
R5 47
J2
JTAG
U1
LCMXO2-640HC-4TG100C
R1 10k
U2
W9812G6KH-6
U10
DNP
U3
60M
R7 10k
R8 DNP
R9 DNP
R11 47
R10 10k
C30 22p
Docs
File: Docs.kicad_sch
R12 47
R13 47
R2 DNP
R3 DNP
R6 220
D1 Amber
LED
Garrett's Workshop
Sheet: /
File: RAM2GS.kicad_sch
Title: GW4201D (RAM2GS II) – LCMXO2-640 / LCMXO2-1200
Size: USLetter
Date: 2025-02-14
Rev: 2.3
KiCad E.D.A. 8.0.6
Id: 1/2

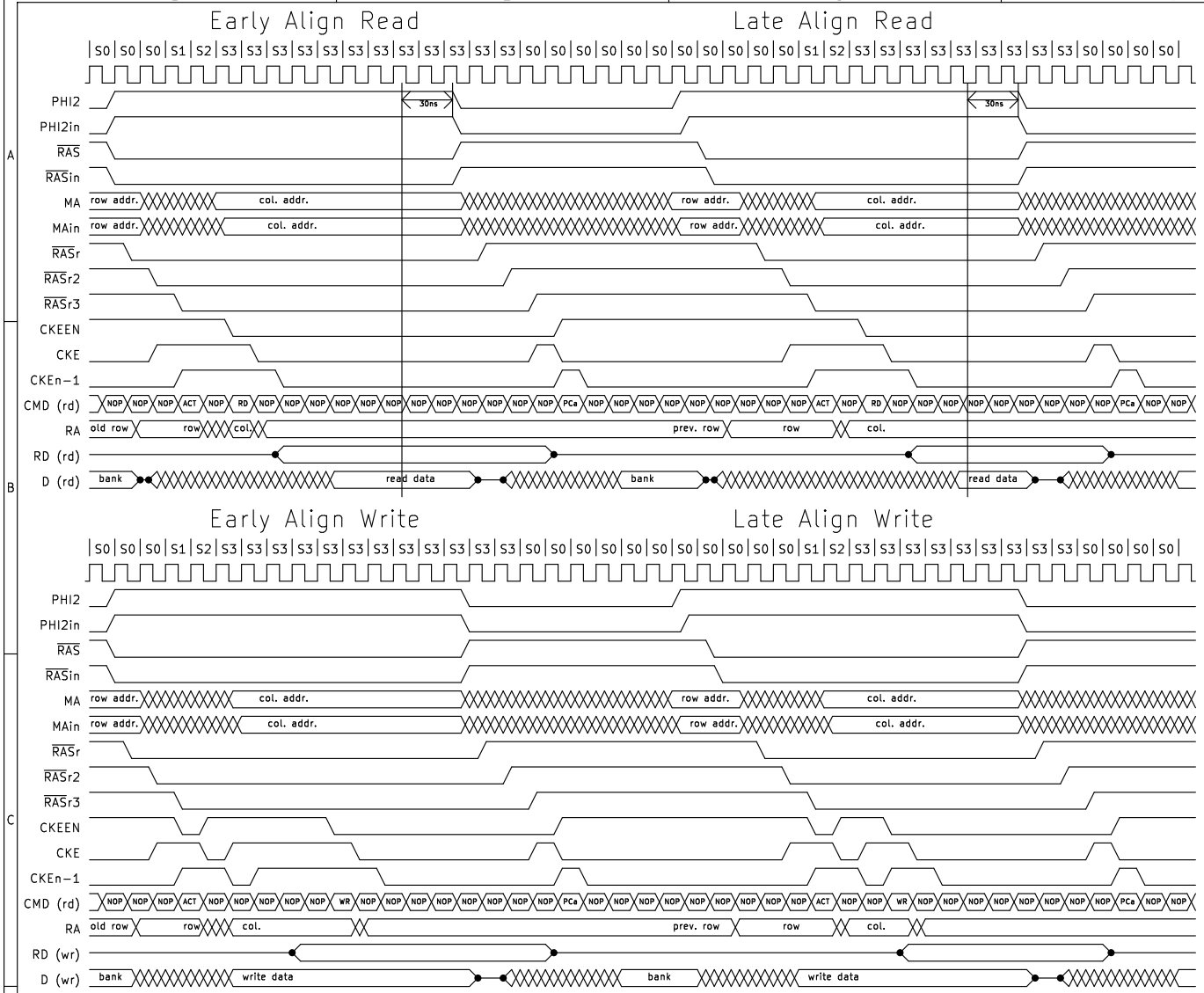

Garrett's Workshop

Sheet: /Docs/
File: Docs.kicad_sch

Title: GW4201D (RAM2GS II) – LCMX02-640 / LCMX02-1200

Size: USLetter	Date: 2025-02-14	**Rev: 2.3**
KiCad E.D.A. 8.0.6		Id: 2/2