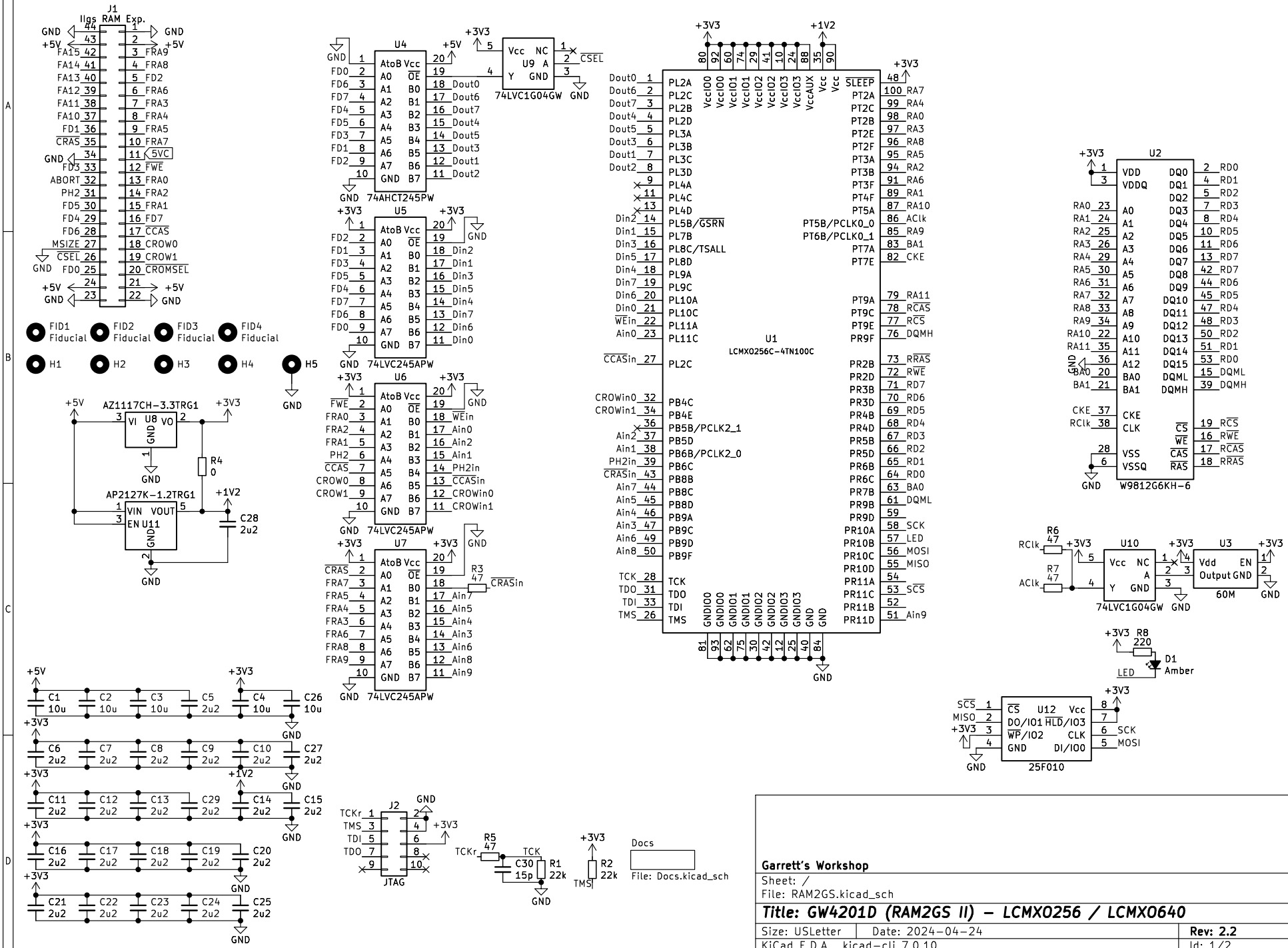
J1
Ilgs RAM Exp.
FID1 Fiducial
FID2 Fiducial
FID3 Fiducial
FID4 Fiducial
H1
H2
H3
H4
H5
AZ1117CH-3.3TRG1
U8
R4 0
AP2127K-1.2TRG1
U11
C28 2u2
U4
74AHCT245PW
U5
74LVC245APW
U6
74LVC245APW
U7
74LVC245APW
R3 47
U9
74LVC1G04GW
U1
LCMXO256C-4TN100C
U2
W9812G6KH-6
R6 47
R7 47
U10
74LVC1G04GW
U3
60M
R8 220
D1 Amber
U12
25F010
J2
JTAG
R5 47
C30 15p
R1 22k
R2 22k
Docs
File: Docs.kicad_sch
Garrett's Workshop
Sheet: /
File: RAM2GS.kicad_sch
Title: GW4201D (RAM2GS II) – LCMXO256 / LCMXO640
Size: USLetter
Date: 2024-04-24
Rev: 2.2
KiCad E.D.A. kicad-cli 7.0.10
Id: 1/2

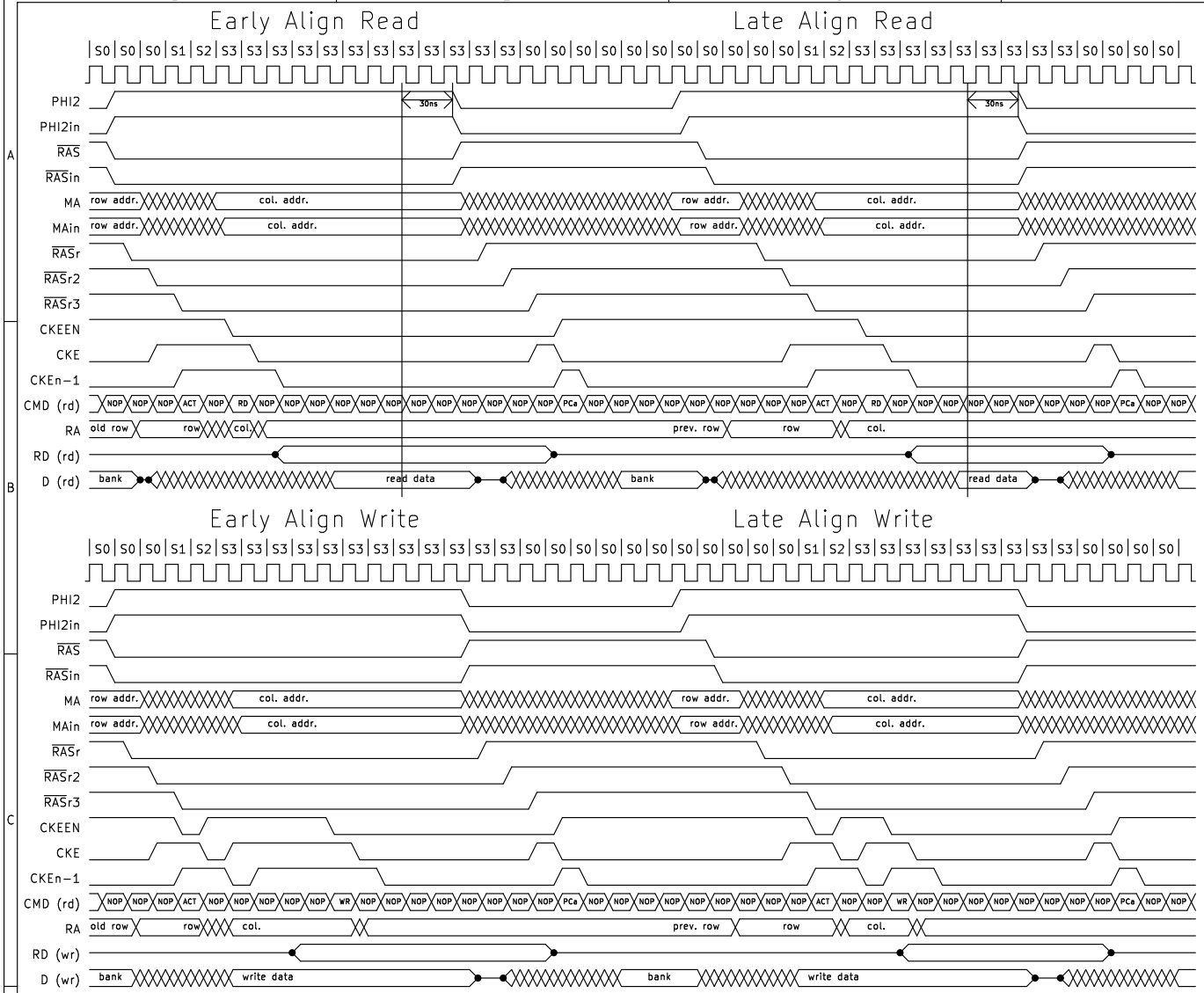

Garrett's Workshop

Sheet: /Docs/
File: Docs.kicad_sch

Title: GW4201D (RAM2GS II) – LCMXO256 / LCMXO640

Size: USLetter	Date: 2024-04-24	**Rev: 2.2**
KiCad E.D.A. kicad-cli 7.0.10		Id: 2/2