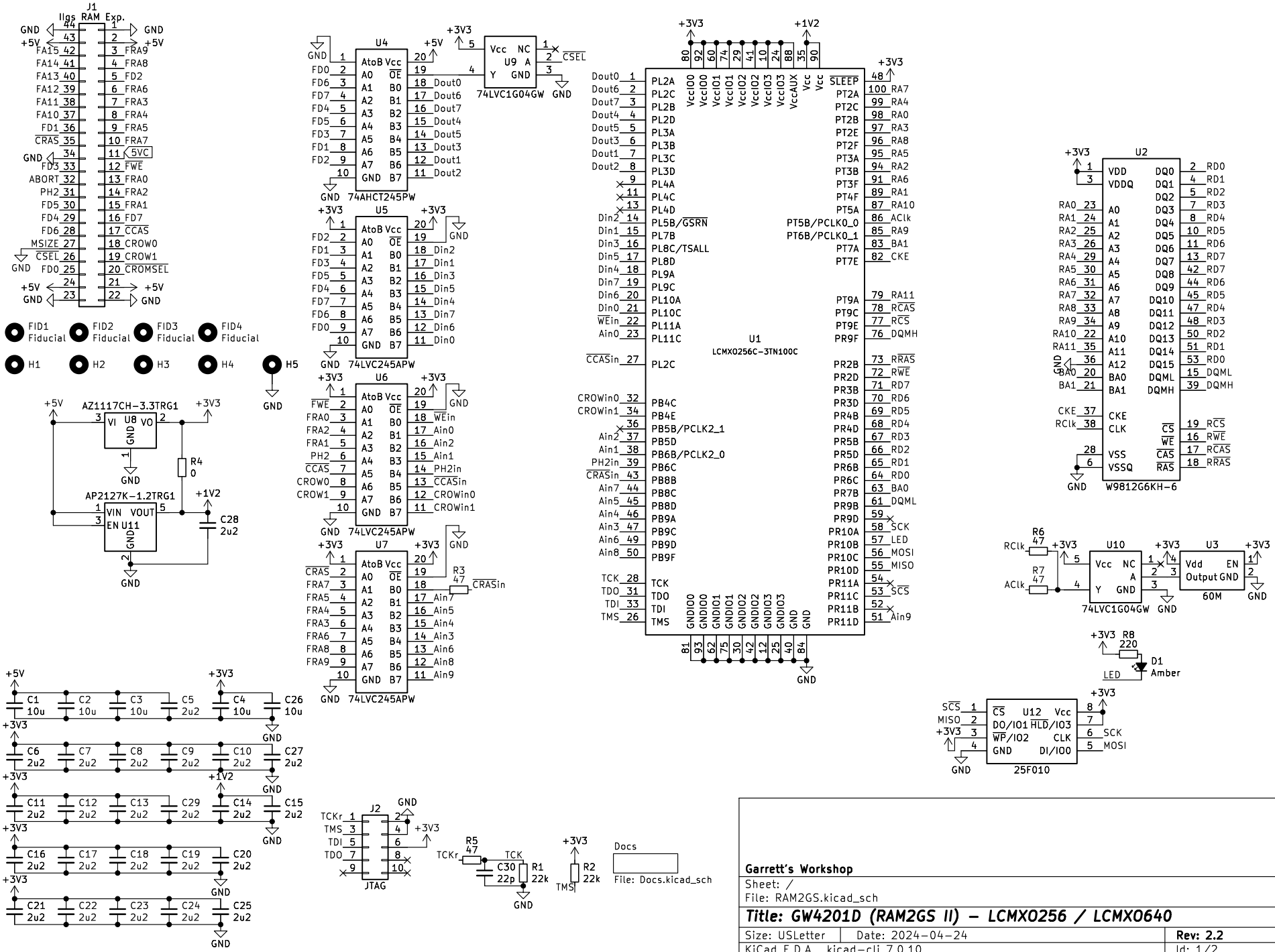

Garrett's Workshop

Sheet: /

File: RAM2GS.kicad_sch

Title: GW4201D (RAM2GS II) – LCMXO256 / LCMXO640

Size: USLetter	Date: 2024-04-24	Rev: 2.2
KiCad E.D.A. kicad-cli 7.0.10		Id: 1/2

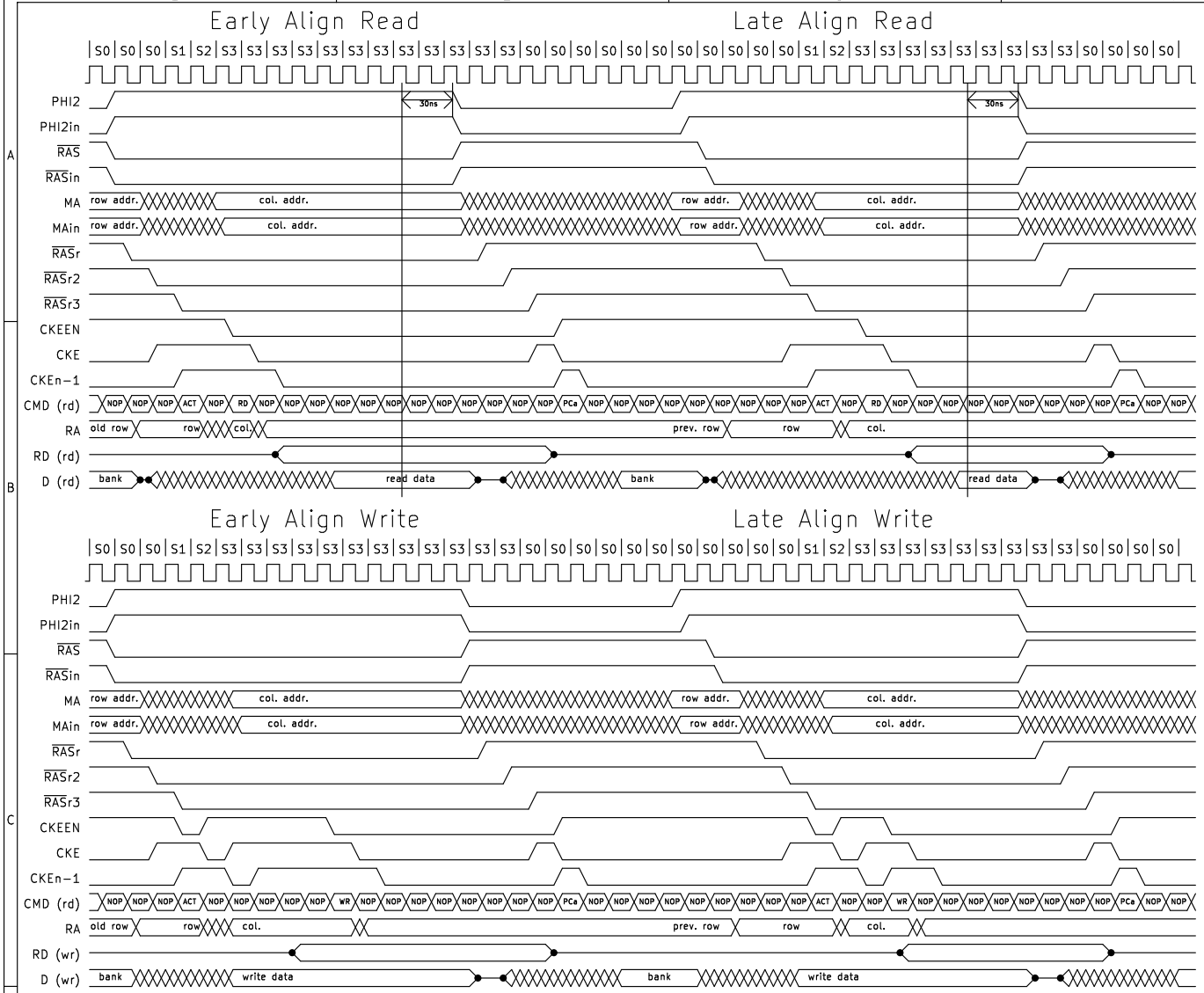

Garrett's Workshop

Sheet: /Docs/
File: Docs.kicad_sch

Title: GW4201D (RAM2GS II) – LCMXO256 / LCMXO640

Size: USLetter	Date: 2024-04-24	**Rev: 2.2**
KiCad E.D.A. kicad-cli 7.0.10		Id: 2/2