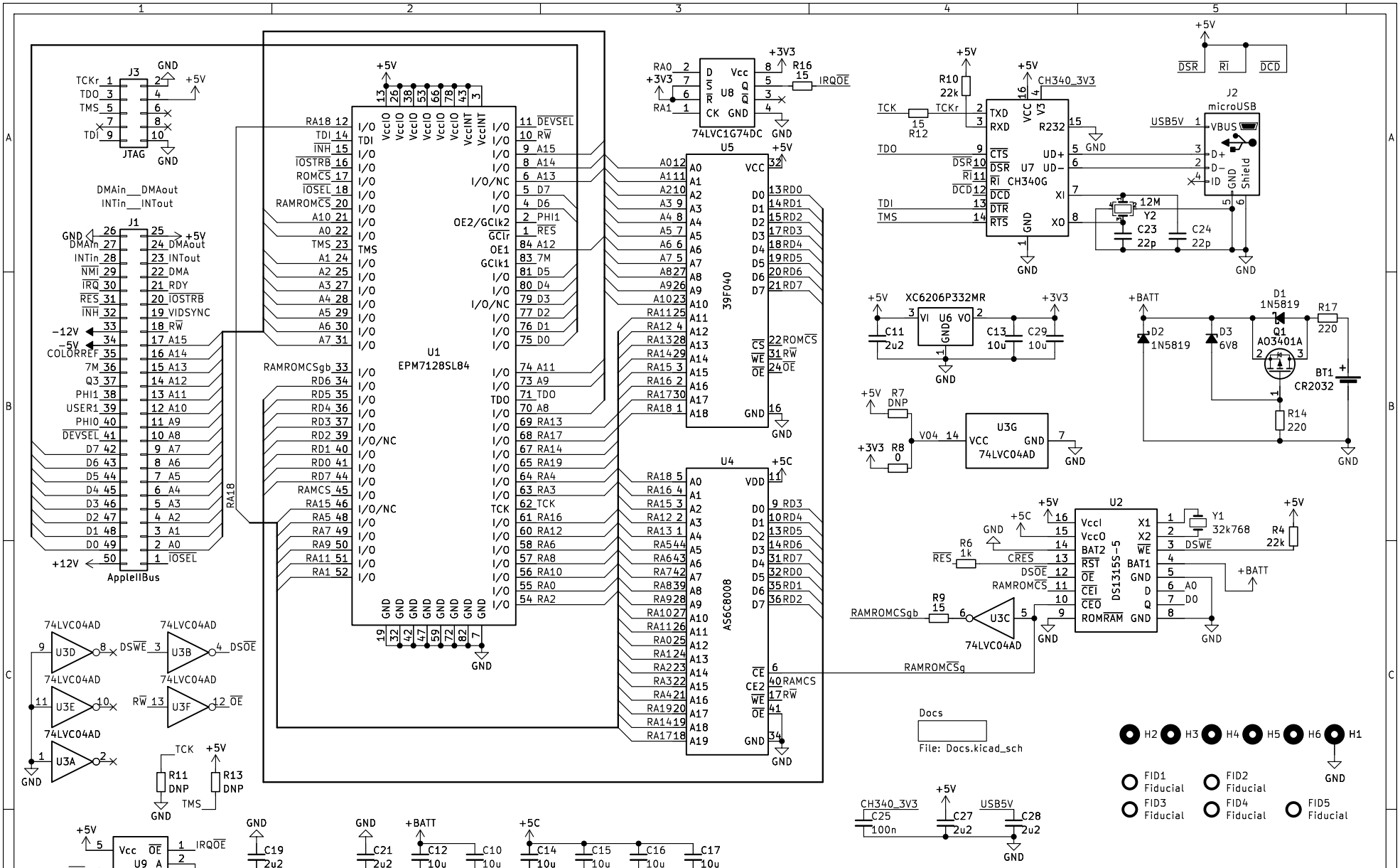
U1
EPM7128SL84
U5
39F040
U4
AS6C8008
U2
DS13155-5
U3G
74LVC04AD
U3C
74LVC04AD
U8
74LVC1G74DC
U7
CH340G
U6
XC6206P332MR
U9
74AHCT1G125GW
J1
AppleIIBus
J3
JTAG
J2
microUSB
Q1
AO3401A
D1
1N5819
D2
1N5819
D3
6V8
BT1
CR2032
Y1
32k768
Y2
12M
SW1
Mode
Docs
File: Docs.kicad_sch
Garrett's Workshop
Sheet: /
File: TimeDisk.kicad_sch
Title: GW4206B (TimeDisk)
Size: USLetter
Date: 2024-03-21
Rev: 1.1
KiCad E.D.A. kicad-cli 7.0.10
Id: 1/2

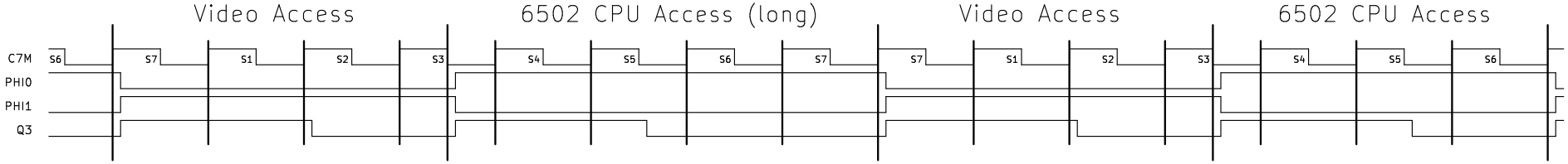

State Synchronization

```
PHI0reg = PHI0 @ C7M
S[3:0] = (PHI0 & PHI0reg) ? 1 :
         (S==0) ? 0 : S+1 @ C7M
```

Select signals (registered)

```
BankSEL = S3 ? (A==XXXF & DEVSEL & REGEN) : BankSEL @ C7M
RAMSEL = S3 ? (A==XXX3 & DEVSEL & REGEN) : RAMSEL @ C7M
AddrHSEL = S3 ? (A==XXX2 & DEVSEL & REGEN) : AddrHSEL @ C7M
AddrMSEL = S3 ? (A==XXX1 & DEVSEL & REGEN) : AddrMSEL @ C7M
AddrLSEL = S3 ? (A==XXX0 & DEVSEL & REGEN) : AddrLSEL @ C7M

REGEN = (IOSEL & S3) ? 1 : REGEN @ C7M
IOROMEN = (A==XXFF & IOSTRB & S3) ? 0 :
          (A==XX00 & IOSEL & S3) ? 1 :
          IOROMEN @ C7M
```

ROM / SRAM Control

```
DBEN = S2 @ C7M

RAMROMCS = RAMSEL | IOSEL | (IOSTRB & IOROMEN)
RAMCS = RAMSEL
ROMCS = RAMROMCSgb & (IOSEL | (IOSTRB & IOROMEN))
```

Address Bus Routing

```
RA[19] = Addr[19]
RA[18:12] = RAMSEL ? Addr[18:12] : Bank[6:0]
RA[11] = RAMSEL ? Addr[18:12] : A[11]
RA[10:0] = Addr[11:0]
```

6502-Accessible Registers

```
Addr[19:16] = (S6 & AddrHSEL & RW) ? D[3:0] : Addr[19:16] @ C7M
Addr[15:8] = (S6 if AddrMSEL & RW) ? D[7:0] : Addr[15:8] @ C7M
Addr[7:0] = (S6 if AddrLSEL & RW) ? D[7:0] : Addr[7:0] @ C7M
if (RAMSEL & S1) Addr[19:0]++ @ C7M
Bank[7:0] = (S6 & BankSEL & RW) ? D[7:0] : Bank[7:0] @ C7M
```

Data Bus Routing

```
RD[7:0] = (DEVSEL | RW) ? 8'bZ : D[7:0]
D[7:0] = (CSEN | DEVSEL | RW) ? 8'bZ :
         AddrHSEL ? {4'hF, Addr[22:16]} :
         AddrMSEL ? Addr[15:8] :
         AddrLSEL ? Addr[7:0] :
         RD[7:0]
```

Information here may be out of date,
superseded by ./cpld/TimeMachine.v

Garrett's Workshop

Sheet: /Docs/
File: Docs.kicad_sch

Title: GW4206B (TimeDisk)

Size: USLetter	Date: 2024-03-21	**Rev: 1.1**
KiCad E.D.A. kicad-cli 7.0.10		Id: 2/2