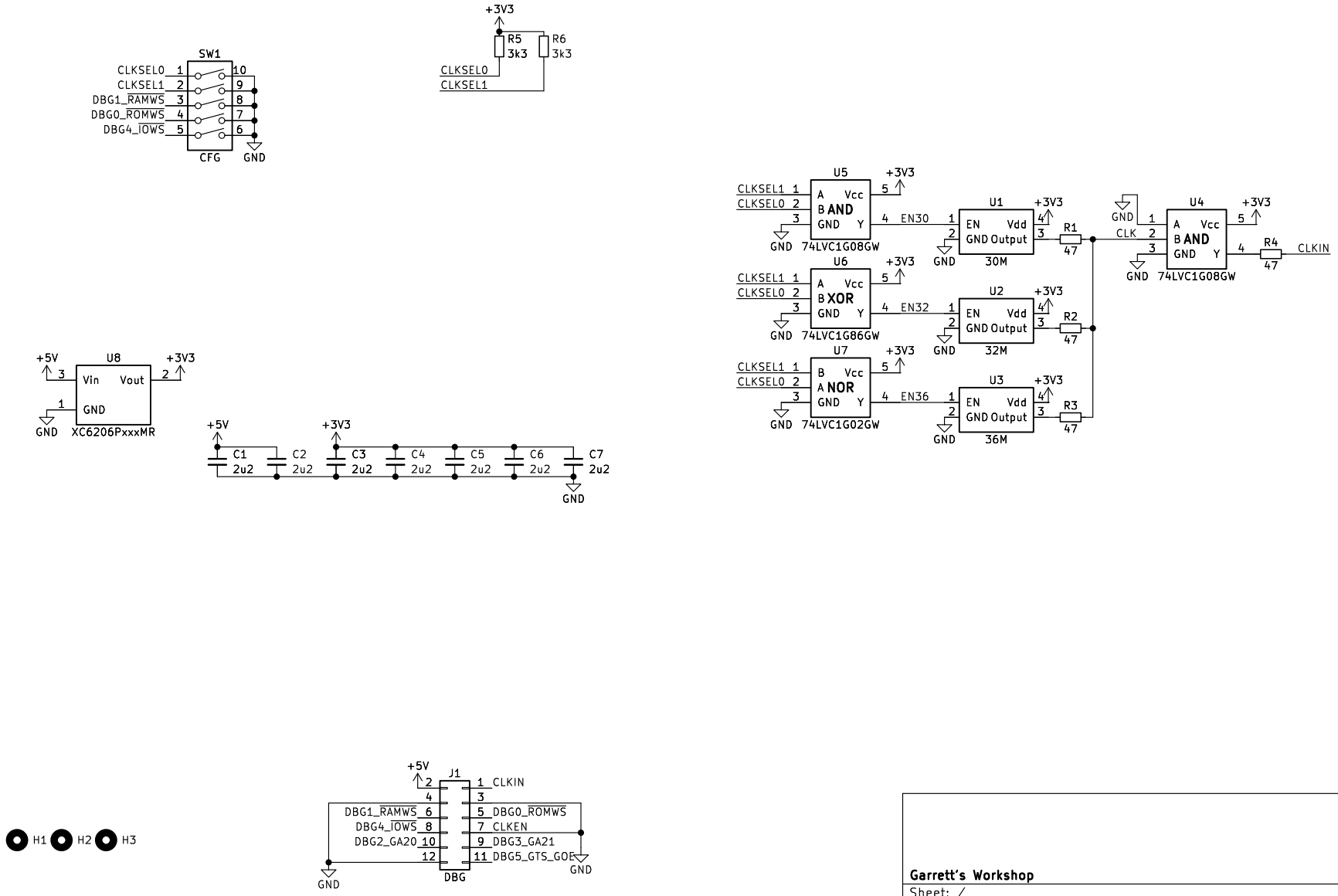

Garrett's Workshop

Sheet: /

File: WarpSE-Overclocking-Board.kicad_sch

Title: WarpSE-OC (GW4411A)

Size: A4	Date: 2024-10-19	**Rev: 1.0**
KiCad E.D.A. 8.0.5		Id: 1/1