HVAC, PLUMBING, ELECTRICAL, AND GENERAL CONTRACTOR COORDINATION SCHEDULE

CATAGORY	DESCRIPTION OF WORK	FURNISHED BY	MOUNTED BY	WIRED BY	NOTES
LOCATING EXISTING UTILITIES	EXTERIOR	G.C.			
	INTERIOR	P.C. AND E.C.			EACH TRADE RESPONSIBLE FOR LOCATING THEIR RESPECTIVE SYSTEMS.
TEMPORARY UTILITIES	TEMPORARY HEAT	G.C.			
	TEMPORARY ELECTRICAL SERVICE	E.C.	E.C.	E.C.	
	WATER AND TOILET AND FACILITIES	G.C.			
CONCRETE	M/E EQUIPMENT PADS, HOUSEKEEPING PADS, CONCRETE SAWING, PATCHING, CORE DRILLING, AND REPAIR.	G.C.			
EXCAVATION	EXCAVATION, BACKFILL, AND CONCRETE OR ASPHAULT PAVING FOR UTILITIES OR OTHER M/E EQUIPMENT.	G.C.			
ROOF TOP, FIELD BUILT EQUIPMENT PLATFORMS AND DUCT CURBS.	STRUCTURAL FRAMING FOR SUPPORT.	G.C.			
	FIELD BUILT EQUIPMENT PLATFORMS AND DUCT CURBS, TOP MINIMUM 9" ABOVE FINISHED ROOF.	G.C.			G.C. TO CONSTRUCT PLATFORM/CURB FROM 2X10'S AS REQ'D AND CAP WITH 3/4" PLYWOOD AND 40# COATED FELT.
	FLASHING OVER THE TOP OF PLATFORMS AND CURBS	H.C.			H.C. TO PROVIDE 26 GA. G.S. METAL TOP EXTENDING 3" DOWN SIDES. ALL JOINTS SOLDERED WATERTIGHT.
	ROOFING REPAIR AND/OR SEALING OF ROOFING SYSTEM	G.C.			
EQUIPMENT AND FIXTURE MOUNTING	STRUCTURAL FRAMING FOR SUPPORT.	G.C.			
	HANGERS, MOUNTING HARDWARE, ANCHORS, PIPING STANDS, AND EQUIPMENT LEGS.	H.C. P.C. E.C.			EACH TRADE RESPONSIBLE FOR MOUNTING THEIR RESPECTIVE EQUIPMENT.
ROOFING AND ROOF PENETRATIONS	PIPE AND ROUND DUCT/VENT ROOFJACKS.	H.C. P.C. E.C.			EACH TRADE RESPONSIBLE FOR ROOFJACKS REQ'D FOR THEIR EQUIPMENT.
	PITCH PANS FOR EQUIPMENT LEGS OR PIPE STANDS.	H.C. P.C. E.C.			EACH TRADE RESPONSIBLE FOR PITCH PANS REQ'D FOR THEIR EQUIPMENT.
	DRAIN, OVERFLOW SCUPPERS, AND GUTTERS.	G.C.			
	ROOFING REPAIR AND/OR SEALING OF ROOFING SYSTEM	G.C.			
PAINTING	EQUIPMENT, DUCTS, PIPES, LOUVERS, AND ETC.	G.C.			
ACCESS DOORS	FOR M/E EQUIPMENT REQUIRING ACCESS.	H.C. P.C. E.C.	G.C.		EACH TRADE TO FURNISH ACCESS DOORS AS REQ'D FOR THEIR EQUIP.
FIRE RATED CHASES	FOR GREASE DUCTS, FLUES, DUCTS, AND ETC.	G.C.			
ELECTRICAL	CONTROL TRANSFORMERS FOR HVAC EQUIPMENT	H.C.	E.C.	E.C.	
	HVAC CONTROL WIRING 48 VOLTS AND LESS.	H.C.		H.C.	
	HVAC CONTROL WIRING GREATER THAN 48 VOLTS.	E.C.		E.C.	
	HVAC EQUIP. INTERLOCK WIRING HIGH AND LOW VOLTAGE.	E.C.		E.C.	
	CONDUIT FOR ALL WIRING.	E.C.	E.C.		
	DISCONNECT SWITCHES.	E.C.	E.C.	E.C.	
	MOTOR STARTERS TO INCLUDE THERMAL OVERLOADS.	H.C. AND P.C.	E.C.	E.C.	EACH TRADE TO FURNISH STARTERS AS REQ'D FOR THEIR EQUIP.
DUCT MOUNTED SMOKE DETECTORS	INTERFACED WITH BUILDING FIRE ALARM SYSTEM.	F.A.C OR E.C.	H.C.	F.A.C OR E.C.	H.C. TO PROVIDE ACTUAL DUCT SIZE MEASUREMENTS.
	IN BUILDING W/O FIRE ALARM/DETECTION SYSTEM.	H.C.	H.C.	E.C.	
	INTERLOCKS W/HVAC SYSTEM FANS.			E.C.	

ABBREVIATIONS: E.C.-ELECTRICAL CONTRACTOR, F.A.C.-FIRE ALARM CONTRACTOR, G.C.-GENERAL CONTRACTOR, H.C.-HVAC CONTRACTOR, M/E-MECHANICAL/ELECTRICAL, P.C.-PLUMBING CONTRACTOR

GENERAL ELECTRICAL PROVISIONS/NOTES

1. ELECTRICAL DRAWINGS.

   ELECTRICAL DRAWINGS ARE DIAGRAMMATIC AND ARE NOT TO BE SCALED FOR DIMENSIONS. TAKE ALL DIMENSIONS FROM ARCHITECTURAL DRAWINGS, CERTIFIED EQUIPMENT DRAWINGS AND FROM THE STRUCTURE ITSELF BEFORE FABRICATING ANY WORK. VERIFY SPACE REQUIREMENTS, COORDINATING WITH OTHER TRADES, AND INSTALL THE SYSTEMS IN THE SPACE PROVIDED WITHOUT VIOLATION OF APPLICABLE CODES, STANDARDS, SPECIFICATION REQUIREMENTS, OR EXTRA CHARGES TO THE OWNER.

2. VERIFICATION OF FIELD CONDITIONS.

   BEFORE UNDERTAKING EACH PART OF THE WORK, CAREFULLY STUDY AND COMPARE THE CONTRACT DOCUMENTS WITH FIELD MEASUREMENTS. PROMPTLY REPORT IN WRITING TO THE ELECTRICAL ENGINEER ANY CONFLICT, ERROR OR DISCREPANCY.

3. EQUIPMENT FURNISHED BY OTHERS.

   COORDINATE EXACT ELECTRICAL REQUIREMENTS (VOLTAGE, PHASE, AMPS, AND ETC.) OF EQUIPMENT FURNISHED BY OTHERS BEFORE PERFORMING WORK.

4. PERMITS.

   APPLY FOR AND PAY FOR ALL PERMITS, FEES, LICENSES AND INSPECTIONS FOR THIS DIVISION OF WORK.

5. CODES.

   COMPLY WITH ALL APPLICABLE CODES AND UTILITY COMPANY REGULATIONS. IN CASE OF CONFLICT WITH THE CONTRACT DOCUMENTS THE MOST STRINGENT SHALL GOVERN.

6. ACCESS DOORS.

   FURNISH ACCESS DOORS TO PROVIDE ACCESS TO ALL J-BOXES, PULL BOXES, AND OTHER EQUIPMENT AS REQUIRED. ACCESS DOORS FOR INSTALLATION IN FIRE RATED CONSTRUCTION SHALL HAVE APPROPRIATE FIRE RATING.

7. ADDING LOADS NOT SHOWN ON THE DRAWINGS.

   BEFORE ADDING ANY LOAD NOT SHOWN ON THE PLANS, TO THE ELECTRICAL SYSTEM, SUBMIT REQUEST IN WRITING TO THE ELECTRICAL ENGINEER FOR APPROVAL.

8. SPECIFIED MANUFACTURERS.

   AN ACCEPTABLE MANUFACTURER'S NAME AND MODEL NUMBER OF A PRODUCT MAY BE GIVEN FOR AN EXAMPLE. THIS IS THE EQUIPMENT CONTEMPLATED DURING THE DESIGN PROCESS AND FORMS THE BASIS OF A STANDARD OF QUALITY. VERIFY THE MODEL NUMBER IS STILL ACCURATE AND MEETS ALL THE REQUIREMENTS AS SHOWN ON THE DRAWINGS. IF THERE IS A DISCREPANCY BETWEEN THE REQUIREMENTS OF THE DRAWINGS AND THE MODEL NUMBER, THE REQUIREMENTS OF THE DRAWINGS SHALL GOVERN. APPROVED EQUALS SHALL BE ALLOWED UNLESS OTHERWISE NOTED.

9. SUBMITTALS.

   A. REQUIRED SUBMITTALS.

      SUBMITT 5 COPIES OF THE FOLLOWING INFORMATION FOR APPROVAL.

      1.) SERVICE EQUIPMENT, PANELBOARDS, LOAD CENTERS, SWITCHES, FUSES, AND CIRCUIT BREAKERS.

      2.) LIGHTING FIXTURES.

      3.) WIRING DEVICES AND DEVICE PLATES.

      4.) FIRE ALARM SHOP DRAWINGS INCLUDING CUT SHEETS ON FACP AND ALL DEVICES. PROVIDE BATTERY CALCULATIONS AND SEQUENCE OF OPERATION.

   B. REVIEW TIME.

      ALLOW 5 WORKING DAYS FOR REVIEW OF SUBMITTALS. ORDER NO MATERIALS OR BEGIN NO WORK UNTIL ALL SUBMITTALS ARE RETURNED APPROVED.

   C. RESUBMISSION.

      MAKE ALL REVISIONS REQUIRED AND RESUBMIT AS REQUIRED FOR INITIAL SUBMITTAL.

10. MISCELLANEOUS MATERIALS

    A. THE ELECTRICAL CONTRACTOR SHALL PROVIDE ALL MISCELLANEOUS HARDWARE AND MATERIAL NOT SPECIFIED BUT NECESSARY TO PROVIDE A COMPLETE AND WORKING ELECTRICAL SYSTEM. THIS HARDWARE SHALL INCLUDE, BUT NOT BE LIMITED TO, ALL MISCELLANEOUS CONDUIT FITTINGS AND MOUNTING HARDWARE, LIGHT FIXTURE MOUNTING HARDWARE, BRACKETS, CONNECTORS, CORDS AND PLUGS.

11. WARRANTIES.

    GUARANTEE ALL WORKMANSHIP, MATERIAL AND EQUIPMENT AND REPLACE ANY FOUND DEFECTIVE WORK WITHOUT COST TO THE OWNER, FOR A PERIOD OF ONE YEAR AFTER FINAL ACCEPTANCE.

FIRE ALARM LEGEND

FACP	FIRE ALARM CONTROL PANEL
S ZONE	PHOTOELECTRIC SMOKE DETECTOR. INITIATION ZONE AS INDICTATED.
S ZONE	EXISTING PHOTOELECTRIC SMOKE DETECTOR.
I	IONIZATION DETECTOR
H ZONE RR	RATE-OF-RISE AND FIXED TEMPERATURE (135 DEG. F.) HEAT DETECTOR.
H ZONE RR	EXISTING RATE-OF-RISE AND FIXED TEMPERATURE HEAT DETECTOR.
H ZONE TEMP	FIXED TEMERATURE HEAT DETECTOR. INITIATION ZONE AND TEMPERATURE INDICATED.
H ZONE TEMP	EXISTING FIXED TEMPERATURE HEAT DETECTOR.
ZONE D	DUCT DETECTOR.
P ZONE	MANUAL PULL STATION.
ZONE P	EXISTING MANUAL PULL STATION.
FS ZONE	FIRE SPRINKLER FLOW SWITCH.
FS ZONE	EXISTING FIRE SPRINKLER FLOW SWITCH.
TS ZONE	TAMPER SWITCH.
TS ZONE	EXISTING TAMPER SWITCH.
H	ELECTRONIC HORN.
H	EXISTING ELECTRONIC HORN.
H S	ELECTRONIC HORN AND STROBE.
H S	EXISTING ELECTRONIC HORN AND STROBE.
B	FIRE ALARM BELL.
B	EXISTING FIRE ALARM BELL.
RA	REMOTE ANNUNCIATOR.
COMM	COMMUNICATOR.
	MAGNETIC DOOR HOLDER.
	REMOTE LIGHT.
EOL RW	END OF LINE RESISTOR.
T	REMOTE LIGHT AND TEST SWITCH

CONDUIT, BOX, AND DEVICE LEGEND

2(4-500MCM THW-CU)4"C.	2EA. PARALLEL RUNS CONSISTING OF 4 EA. 500 MCM THW CONDUCTORS IN 4" CONDUIT.
4 L-1	CIRCUIT #4 HOMERUN TO PANEL L-1.
	CONDUIT CONCEALED IN WALL OR CLG.
	EXISTING CONDUIT. (WHITE)
	EXPOSED CONDUIT.
UFE	UNDER FLOOR ELECTRICAL CONDUIT.
UGE	UNDERGROUND ELECTRICAL CONDUIT.
EUGE	EXISTING UNDERGROUND ELECTRICAL CONDUIT.
	SMALLER - UNGROUNDED PHASE CONDUCTOR LONGER - GROUNDED CONDUCTOR (NEUTRAL) CIRCUIT #A. ALL CONDUCTORS ARE #12 AWG THHN/THWN-CU UNLESS OTHERWISE NOTED.
	SWITCH LEG CONDUCTOR.
	GROUND CONDUCTOR.
	ISOLATED GROUND CONDUCTOR.
	3 ... TRAVELER
J	J-BOX
J	J-BOX ON EMERGENCY CIRCUIT.
a	WALL SWITCH, a - FIXTURES OR DEVICES CONTROLLED.
3a	3-WAY WALL SWITCH.
	DIMMER SWITCH.
	WALL TELEPHONE OUTLET, 18" AFF UNLESS OTHERWISE NOTED. 3/4" CONDUIT STUBBED UP WALL TERMINATING ABOVE CLG.
	WALL TELEPHONE/DATA OUTLET, 18" AFF UNLESS OTHERWISE NOTED. 3/4" CONDUIT STUBBED UP WALL TERMINATING ABOVE CLG.
TV	WALL TELEVISION OUTLET, 18" AFF UNLESS OTHERWISE NOTED. 3/4" CONDUIT STUBBED UP WALL TERMINATING ABOVE CLG.
D	COMPUTER DATA OUTLET. 3/4" CONDUIT STUBBED UP WALL TERMINATING ABOVE CLG.
1	DUPLEX RECPTACLE, CIRCUIT #1. 18" AFF.
CIR	DOUBLE DUPLEX RECPTACLE.
GFI	DUPLEX RECP. W/GROUND FAULT INTERRUPTER.
	SWITCHED RECP., 1 - CKT, a - SWITCH.
	SIMPLEX RECPTACLE
6-30R 1,3	SPECIAL RECPTACLE, 6-30R - ANSI CONFIGURATION, 1,3 - CIRCUIT.
	FLOOR MOUNTED RECPTACLE.
CKT	CEILING MOUNTED RECPTACLE.
CKT	FLOOR MOUNTED RECPTACLE.
CKT	FLOOR MOUNTED DOUBLE DUPLEX RECPTACLE.
D	FLOOR MOUNTED COMPUTER DATA OUTLET.
	MULTIOUTLET ASSEMBLY.
	WIREMOLD J-BOX, ELBOW, T OR ENTRANCE END FITTING.

LIGHT FIXTURE LEGEND

"PC" - PLAN CONTURE SCHEDULE. "SW" - SWITCH
"CKT" - CIRCUIT

CEILING MOUNTED FIXTURE.
WALL MOUNTED FIXTURE.
RECESSED FLUORESCENT FIXTURE.
RECESSED FLUORESCENT FIXTURE W/ ONE BALLAST SHOWN. NIGHT LIGHT, ON EMERGENCY CIRCUIT AS REQ'D, OR EMERGENCY LINE SCHEDULE. SEE LIGHTING
EXISTING FLOURESCENT FIXTURE. SWITCH NUMBER, CIR NUMBER, OR CIR NUMBER. IF FIXTURE IS TO BE INDICATES LOCATED.
RECESSENT OPEN STRIP OR STRIAL FIXTURE.
RECESSENT WRAP FIXTURE.
RECESSED DOWNLIGHT FIXTURE.
RECESSED WALL WASHER FIXTURE.
FIXTURE.
SIGN, X1 - PAN CODE.
BATTERY POWERED EGRESS LIGHTING.

ELECTRICAL MATERIALS AND METHODS

PART 1 GENERAL

1.1 THIS SECTION DESCRIBES THE MATERIALS AND METHODS COMMON TO THE ELECTRICAL DIVISION OF WORK.

PART 2 PRODUCTS

2.1 RACEWAY SYSTEMS.

A. ABOVE GROUND INTERIOR.

HOT DIP GALVANIZED AS REQUIRED BY CODE OF EMT, IMC, OR RMC.

B. BURIED AND UNDER CONCRETE SLABS.

SCHEDULE 40 PVC W/ASPHAULT COATED RMC ELBOWS WHERE PENETRATING SURFACE.

2.2 CABLE SYSTEMS.

CONCEALED SPACES ONLY, TYPE AC OR MC CABLE AS ALLOWED BY CODE.

2.3 CONDUCTORS.

A. CONDUCTORS SHALL BE COPPER EXCEPT AS OTHERWISE NOTED.

B. MINIMUM SIZE SHALL BE #12 AWG EXCEPT AS OTHERWISE NOTED.

C. INSULATION SHALL BE THWN-THHN EXCEPT AS OTHERWISE NOTED.

2.4 PANELBOARDS.

PROVIDE PANELBOARDS W/BOLT-ON CIRCUIT BREAKERS WHERE INDICATED ON DRAWINGS WITH A PLAN CODE BEGINING WITH "PB". SEE PANEL SCHEDULE FOR CAPACITY, RATINGS, SPACES, VOLTAGE, PHASE, MOUNTING, AND OTHER OPTIONS TO BE PROVIDED.

2.5 LOAD CENTERS.

PROVIDE LOAD CENTERS W/PUSH-ON CIRCUIT BREAKERS WHERE INDICATED ON DRAWINGS WITH A PLAN CODE BEGINING WITH "LC". SEE PANEL SCHEDULE FOR CAPACITY, RATINGS, SPACES, VOLTAGE, PHASE, MOUNTING, AND OTHER OPTIONS TO BE PROVIDED.

PART 3 EXECUTION.

3.1 RACEWAY SYSTEMS.

A. RUN CONDUIT PARALLEL WITH AND AT RIGHT ANGLES TO BUILDING LINES.

B. PROVIDE 1 EMPTY 3/4" CONDUIT FOR EVERY 3 UNUSED SPACES IN FLUSH MOUNTED PANELBOARDS OR LOAD CENTERS. TERMINATE EMPTY CONDUIT IN A JUNCTION BOX WHICH IS ACCESSIBLE.

C. PROVIDE FLEXIBLE CONDUIT ON CONNECTIONS TO VIBRATING EQUIPMENT. CONDUIT AND GROUNDING MEANS SHALL BE PER NEC.

3.2 IDENTIFICATION OF EQUIPMENT.

A. IDENTIFY EACH DISCONNECT SWITCH, XFMR, PANELBOARD, LOAD CENTER, AND ALL OTHER ELECTRICAL EQUIPMENT IDENTIFIED BY A PLAN CODE ON THE DRAWINGS.

B. NAMEPLATES SHALL BE ENGRAVED IN LAMINATED PLASTIC, 3/8" HIGH AND ATTACHED WITH SCREWS.

C. ALL PANELBOARDS AND LOAD CENTERS SHALL HAVE TYPEWRITTEN DIRECTORIES INSERTED ON THE INSIDE FACE OF THE DOOR IDENTIFING EACH CIRCUIT.

D. ALL COMPONENTS OF EMERGENCY CIRCUITS SHALL BE PAINTED RED.

3.3 EMERGENCY CIRCUITS.

ALL WIRING FOR EMERGENCY CIRCUITS SHALL BE RUN IN SEPARATE RACEWAYS AND BOXES.

ELECTRICAL EQUIPMENT LEGEND

	WEATHER HEAD
3R	SAFETY SWITCH, NONFUSED, NEMA 3R ENCLOSURE.
	SAFETY SWITCH, FUSED
	NEW PANEL, "LC" - LOAD CENTER, "LP" - LOW VOLTAGE PANELBOARD, "HP" - HIGH VOLTAGE PANELBOARD.
	EXISTING PANEL.
C	CONTACTOR
SM	MANUAL MOTOR STARTER
	PLUG FUSE/SWITCH, MOTOR PROTECTION/DISCONNECT.
	MAGNETIC MOTOR STARTER FIELD SUPPLIED AND MOUNTED.
	COMBINATION MOTOR STARTER
	MOTOR, HP NOTED
EQ 5	EQUIPMENT BY OTHERS, "EQ-1" - PLAN CODE, "5" - CIRCUIT NUMBER.
TC	TIME CLOCK.

FIRE ALARM NOTE

CONTRACTOR SHALL INCLUDE IN BID TO PROVIDE A COMPLETE FIRE ALARM AND DETECTION SYSTEM. ALSO INCLUDE IN BID TO PROVIDE ALL REQUIRED SHOP DRAWINGS FOR PERMIT AND CONSTRUCTION.

ONE LINE EQUIPMENT LEGEND

CT METERING SECTION	FUSED SWITCH	MAIN LUG ONLY PANEL	NEW SWITCH NEW FUSE
EXISTING CT METERING SECTION	EXISTING FUSED SWITCH	EXISTING MIAN LUG ONLY PANEL	EXISTING SWITCH EXISTING FUSE
METER	EXISTING SWITCH NEW FUSE	MAIN CIRCUIT BREAKER PANEL	AUTOMATIC TRANSFER SWITCH
EXISTING METER	NEW CIRCUIT BREAKER	EXISTING MAIN CIRCUIT PANEL	1ø TRANSFORMER
GROUND	EXISTING ENCLOSURE NEW BREAKER	CIRCUIT BREAKER	3ø DELTA-WYE TRANSFORMER
EXISTING GROUND	EXISTING BREAKER EXISTING ENCLOSURE	FAULT	3ø DELTA-DELTA TRANSFORMER
GROUND SYMBOL			EXISTING TO REMAIN
			NEW WORK

1	ISSUE	DATE
	PERMIT	12/1/00
1	REVISION	1/19/01
	RFC	4/23/01

© COPYRIGHT 2000
THIS DOCUMENT, INCLUDING OF THE IDEAS AND DESIGNS CONTAINED HEREIN IS THE PROPERTY OF BELFAY ENGINEERING. ANY USE OF THIS DOCUMENT OR IDEAS WITHOUT THE WRITTEN CONSENT OF BELFAY ENGINEERING IS PROHIBITED.

ENGINEERED FOR:
Infinity Electric
5124 WASHINGTON ST. DENVER, CO.
P-303-295-2221

ENGINEERING BY:
BELFAY ENGINEERING
MECHANICAL/ELECTRICAL ENGINEERING
2811 E. 6TH AVENUE
DENVER, CO. 80206
303 892-5980 FAX 892-5979

Electrical Water Tower Lofts

WATER TOWER LOFTS
2960 INCA STREET
DENVER, COLORADO

JOB# 00208
FILE 00208E0
ENGINEERED BY ABM

AS BUILT

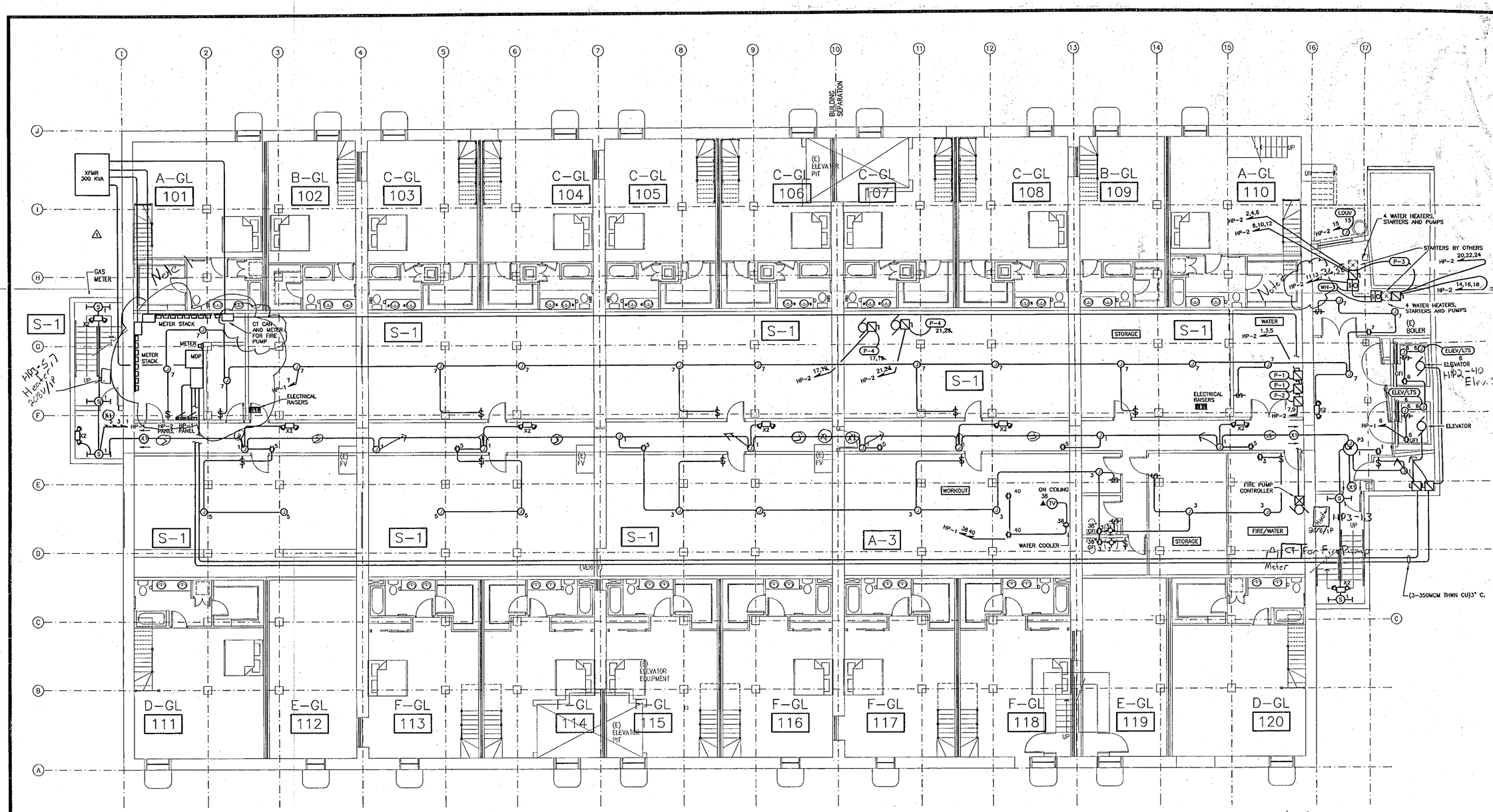

NORTH

BASEMENT FLOOR PLAN

SCALE 1/8" = 1'-0"

NOTES

1 – ALL COMMON LIGHTING TO REMAIN "ON" IN ALL TIMES

2 – FIXTURES TO BE PROVIDED BY OWNER. 60W PER FIXTURE USED FOR LOAD CALCULATIONS

3 – E.C. TO COORDINATE EXACT LOCATION OF FIXTURES WITH ARCHITECT.

ISSUE	DATE
PERMIT	1/17/01
REVISION	1/19/01
CONSTRUCTION	3/2/01
RFC	4/23/01

© COPYRIGHT 2000
THIS DOCUMENT INCLUSIVE OF THE IDEAS INCORPORATED HEREIN IS THE PROPERTY OF DELFAY ENGINEERING. ANY USE OF THIS DOCUMENT OR IDEAS WITHOUT THE WRITTEN CONSENT OF DELFAY ENGINEERING IS PROHIBITED.

ENGINEERED FOR:
qualityElectric
5124 WASHINGTON ST, DENVER, CO
(303) 292-2220

NEERING
CTRICAL ENGINEERING
892-5979

WATER TOWER LOFTS
2960 INCA STREET
DENVER, COLORADO

JOB#	00208
FILE	00208E1
ENGINEERED BY	ABM

E1

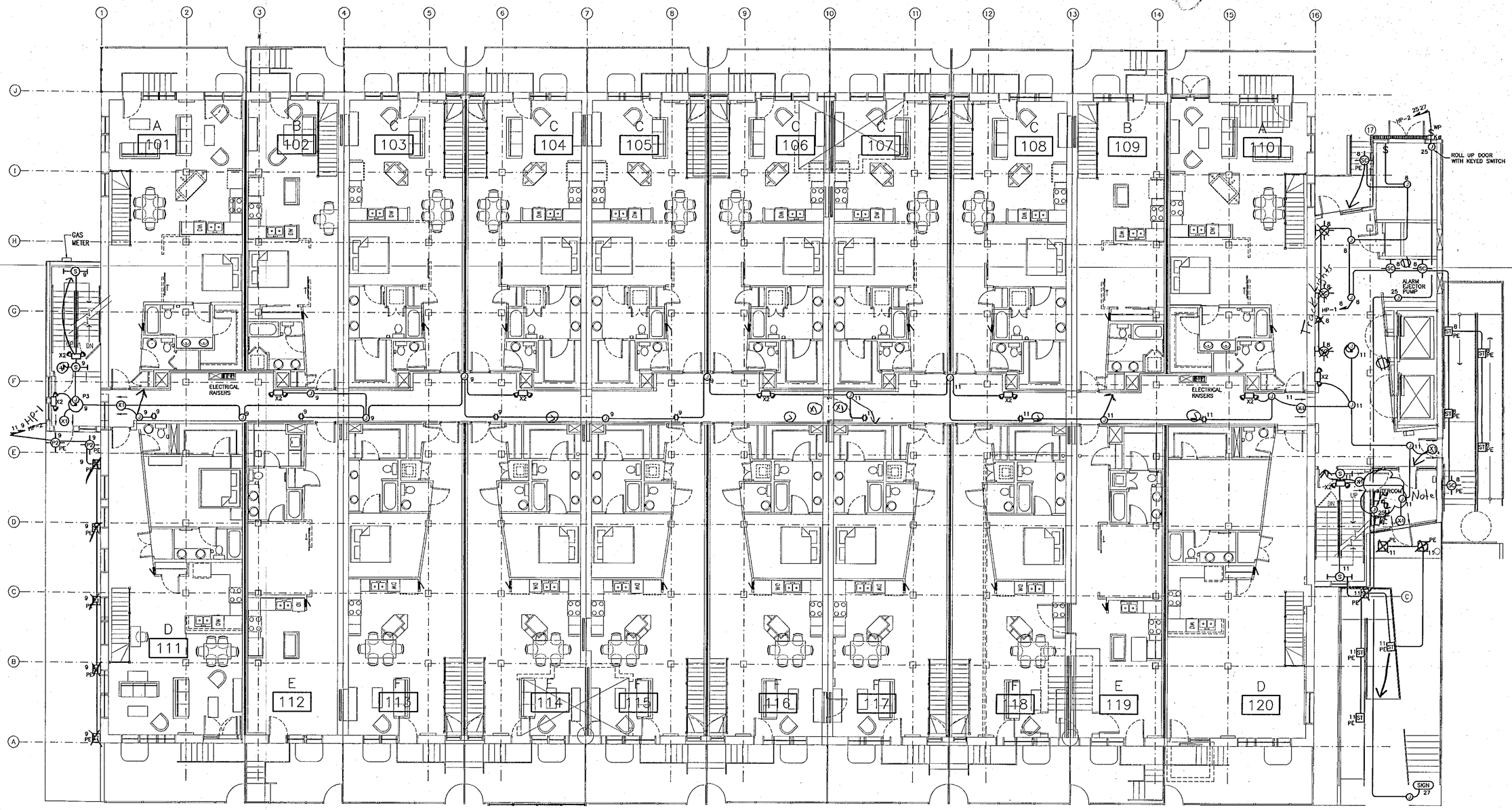

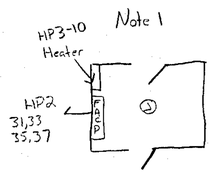

NORTH

FIRST FLOOR ELECTRICAL PLAN

SCALE 1/8" = 1'-0"

NOTES

1 – ALL COMMON LIGHTING TO REMAIN "ON" IN ALL TIMES
2 – FIXTURES TO BE PROVIDED BY OWNER. 60W PER FIXTURE USED FOR LOADS CALCULATIONS
3 – E.C. TO COORDINATE EXACT LOCATION OF FIXTURES WITH ARCHITECT.

ISSUE	DATE
PERMIT	12/1/00
REVISION	1/19/01
RFC	4/23/01

© COPYRIGHT 2000
THIS DOCUMENT, INCLUSIVE OF THE IDEAS INCORPORATED HEREIN IS THE PROPERTY OF BELFAY ENGINEERING. ANY USE OF THIS DOCUMENT OR IDEAS WITHOUT THE WRITTEN CONSENT OF BELFAY ENGINEERING IS PROHIBITED.

ENGINEERED FOR:
Stability Electric
4324 WASHINGTON ST. DENVER, CO
T-303-295-2221

ENGINEERING BY:
BELFAY ENGINEERING
MECHANICAL/ELECTRICAL ENGINEERING
2811 W. 5TH AVENUE
DENVER, COLORADO 80204
T 892-5980 FAX 892-5979

WATER TOWER LOFTS
2960 INCA STREET
DENVER, COLORADO

JOB# 00208
FILE 00208E2
ENGINEERED BY ABM

E2

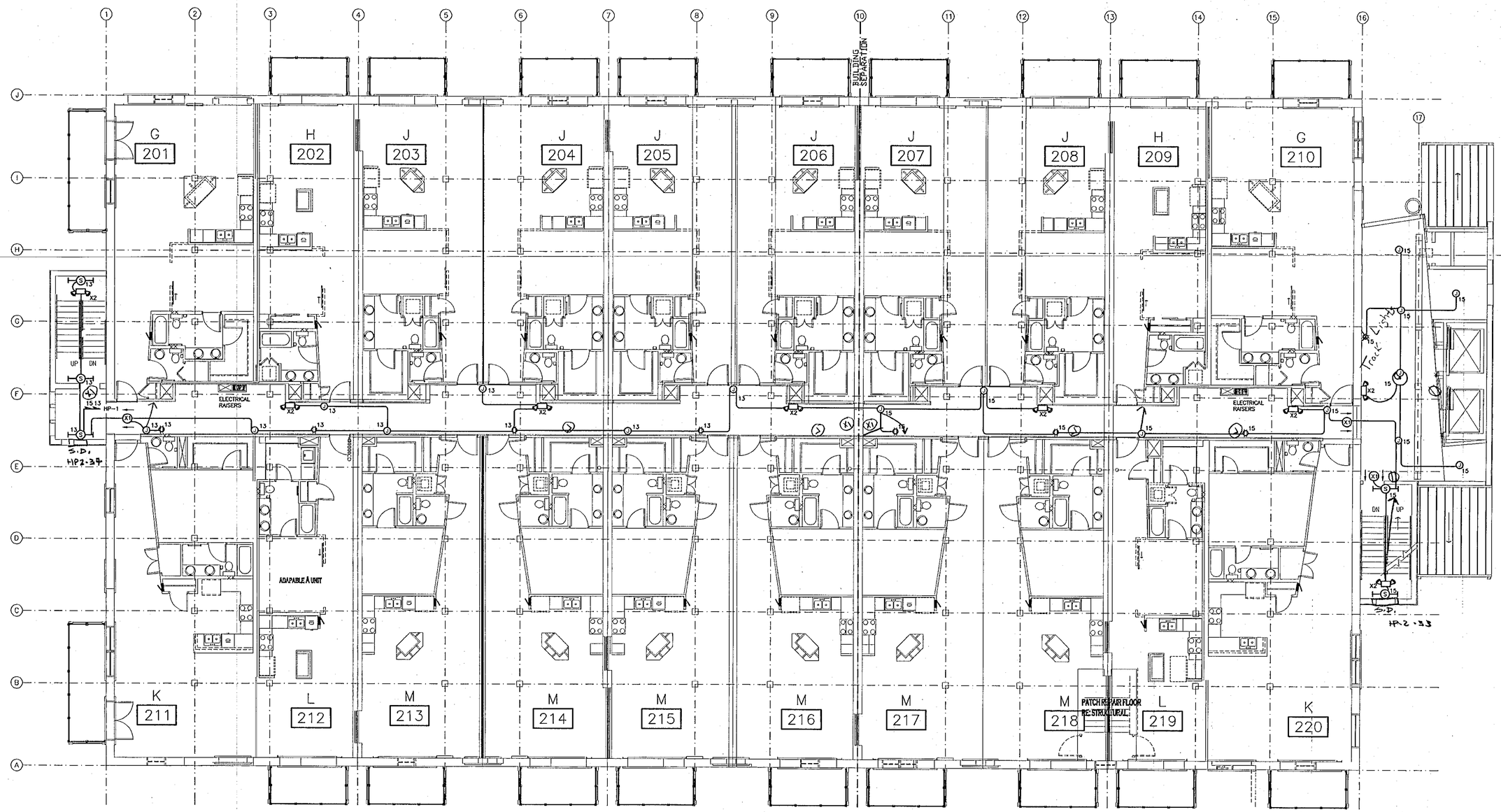

NORTH

SECOND FLOOR ELECTRICAL PLAN

SCALE 1/8" = 1'-0"

NOTES

1 – ALL COMMON LIGHTING TO REMAIN "ON" IN ALL TIMES
2 – FIXTURES TO BE PROVIDED BY OWNER. 60W PER FIXTURE USED FOR LOADS CALCULATIONS
3 – E.C. TO COORDINATE EXACT LOCATION OF FIXTURES WITH ARCHITECT.

△	ISSUE	DATE
	PERMIT	12/1/00
	REVISION	1/19/01
	RFC	4/23/01

© COPYRIGHT 2000
THIS DOCUMENT, INCLUSIVE OF THE IDEAS INCORPORATED HEREIN IS THE PROPERTY OF BELFAY ENGINEERING. ANY USE OF THIS DOCUMENT OR IDEAS WITHOUT THE WRITTEN CONSENT OF BELFAY ENGINEERING IS PROHIBITED.

ENGINEERED FOR:
qualityElectric
4124 WASHINGTON ST. DENVER, CO
1-303-295-2221

ENGINEERING BY:
BELFAY ENGINEERING
MECHANICAL/ELECTRICAL ENGINEERING
2811 W. 9TH AVENUE
DENVER, CO 80204
303 892-5980 FAX 892-5979

WATER TOWER LOFTS
2960 INCA STREET
DENVER, COLORADO

JOB# 00208
FILE 00208E3
ENGINEERED BY ABM

E3

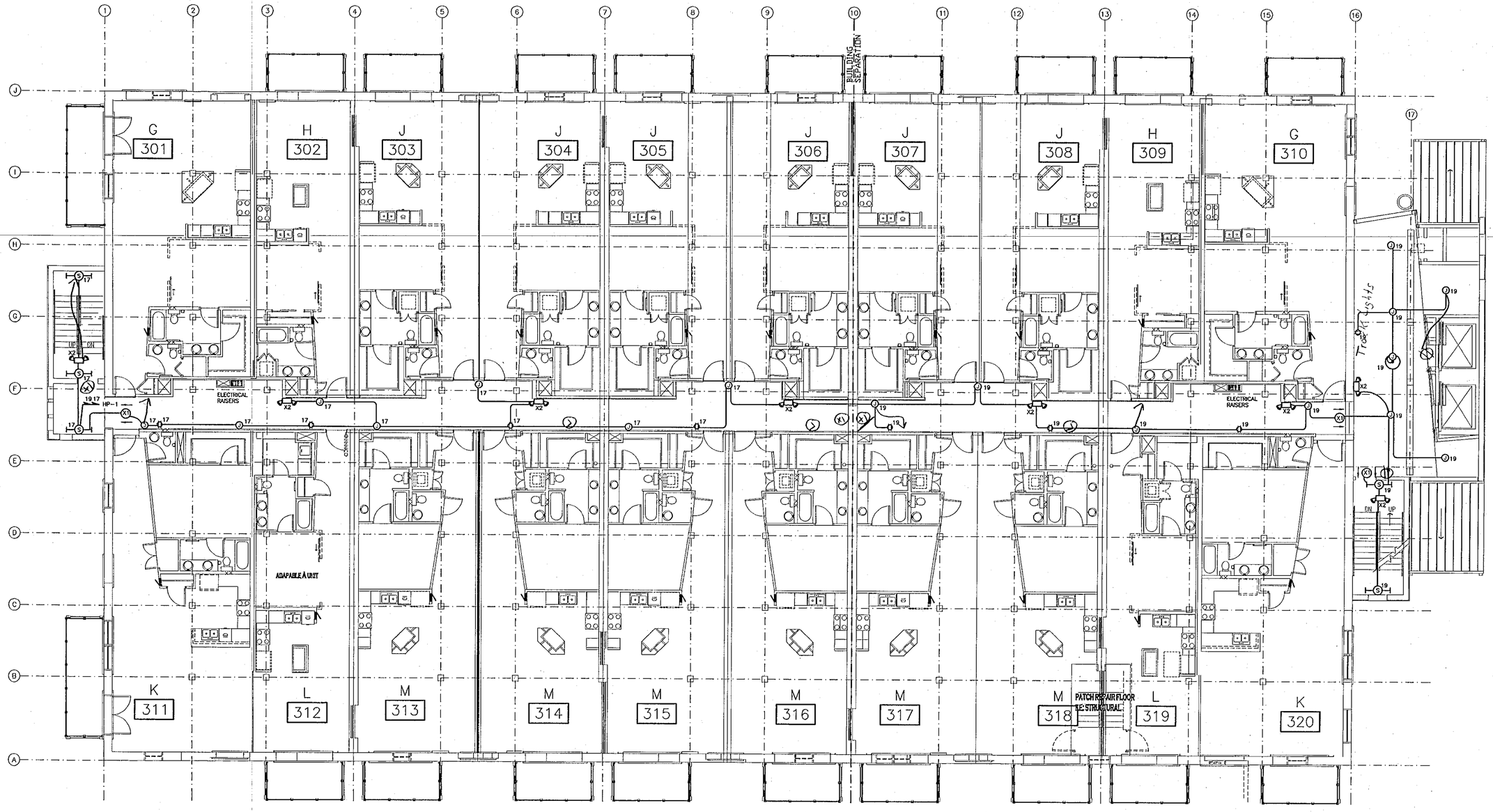

NORTH

THIRD FLOOR ELECTRICAL PLAN

SCALE 1/8" = 1'-0"

NOTES

1 – ALL COMMON LIGHTING TO REMAIN "ON" IN ALL TIMES
2 – FIXTURES TO BE PROVIDED BY OWNER. 60W PER FIXTURE USED FOR LOADS CALCULATIONS
3 – E.C. TO COORDINATE EXACT LOCATION OF FIXTURES WITH ARCHITECT.

ISSUE	DATE
PERMIT	12/1/00
REVISION	1/19/01
RFC	4/23/01

© COPYRIGHT 2000
THIS DOCUMENT INCLUDES OF THE IDEAS AND DESIGNS HEREIN, IS THE PROPERTY OF BELFAY ENGINEERING. REPRODUCTION OF THIS DOCUMENT OR IDEAS WITHOUT THE WRITTEN CONSENT OF BELFAY ENGINEERING IS PROHIBITED.

ENGINEERED FOR:
qualityElectric
5124 WASHINGTON ST. DENVER, CO
1-303-295-2221

ENGINEERING BY:
BELFAY ENGINEERING
MECHANICAL/ELECTRICAL ENGINEERING
2811 W. 97TH AVENUE
DENVER, CO 80204
303 892-5980 FAX 892-5979

WATER TOWER LOFTS
2960 INCA STREET
DENVER, COLORADO

JOB# 00208
FILE 00208E4
ENGINEERED BY ABM

E4

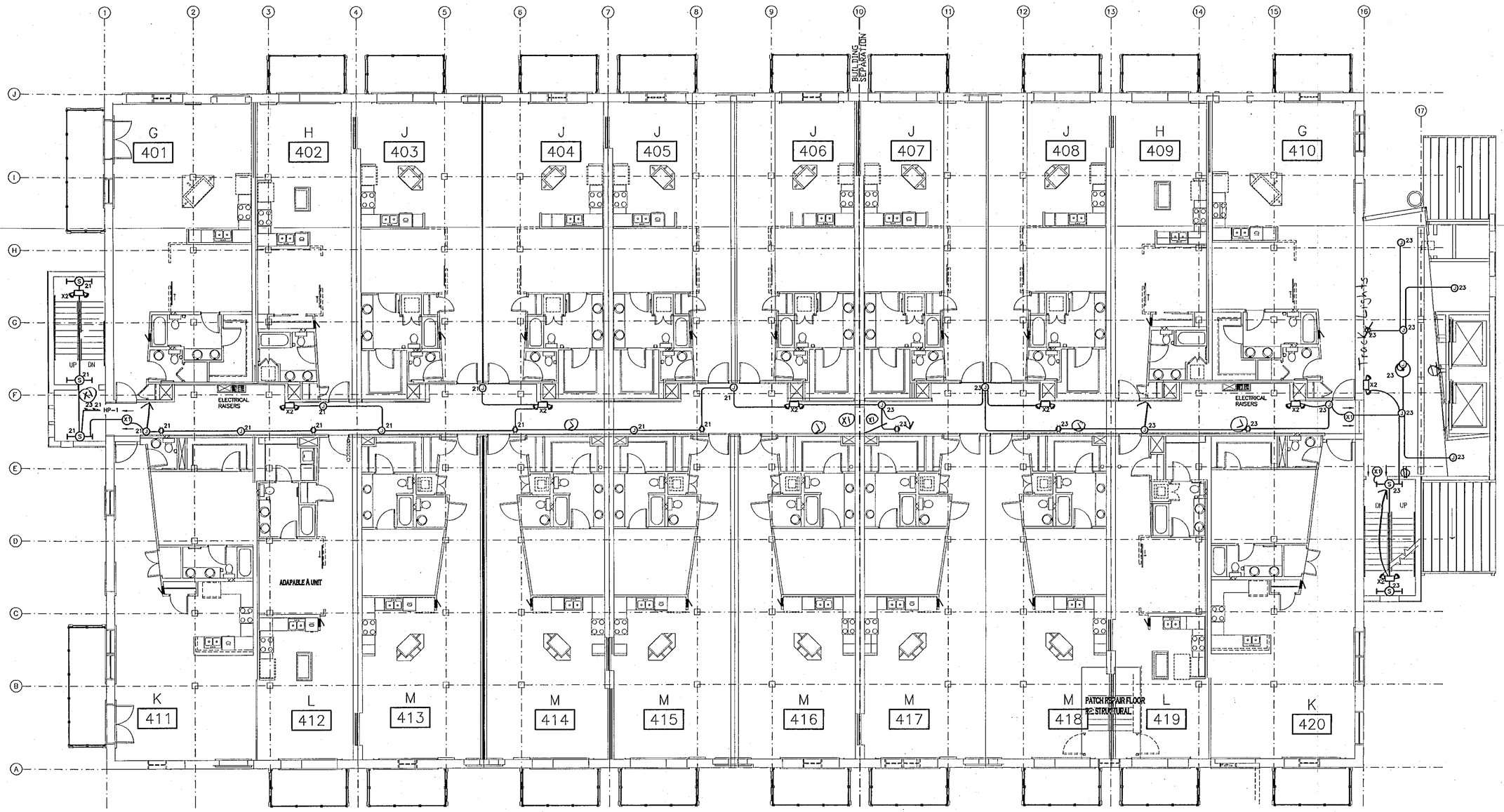

NORTH

FOURTH FLOOR ELECTRICAL PLAN

SCALE 1/8" = 1'-0"

NOTES

1 – ALL COMMON LIGHTING TO REMAIN "ON" IN ALL TIMES
2 – FIXTURES TO BE PROVIDED BY OWNER, 60W PER FIXTURE USED FOR LOADS CALCULATIONS
3 – E.C. TO COORDINATE EXACT LOCATION OF FIXTURES WITH ARCHITECT.

ISSUE	DATE
PERMIT	12/1/00
REVISION	1/19/01
RFC	4/23/01

© COPYRIGHT 2000
THIS DOCUMENT INCLUSIVE OF THE IDEAS INCORPORATED HEREIN IS THE PROPERTY OF BELFAY ENGINEERING. ANY USE OF THIS DOCUMENT OR IDEAS WITHOUT THE WRITTEN CONSENT OF BELFAY ENGINEERING IS PROHIBITED.

ENGINEERED FOR:
Quality Electric
5124 WASHINGTON ST. DENVER, CO
1-303-295-2221

ENGINEERING BY:
BELFAY ENGINEERING
MECHANICAL/ELECTRICAL ENGINEERING
2811 W. 9TH AVENUE
DENVER, CO 80204
303 892-5960 FAX 892-5979

WATER TOWER LOFTS
2960 INCA STREET
DENVER, COLORADO

JOB# 00208
FILE 00208E5
ENGINEERED BY ABM

E5

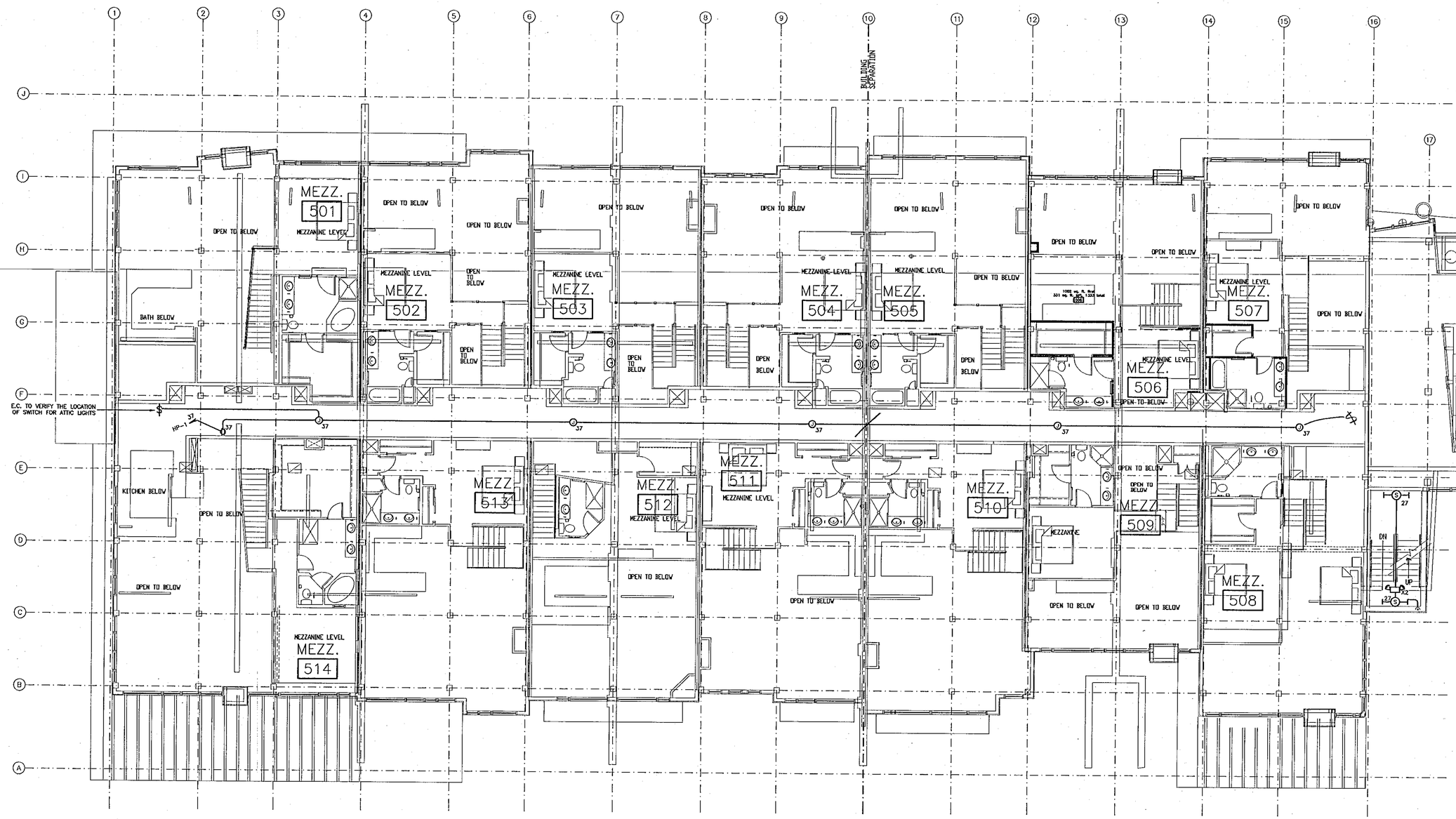

NORTH

MEZZANINE ELECTRICAL PLAN

SCALE 1/8" = 1'-0"

NOTES

1 — ALL COMMON LIGHTING TO REMAIN "ON" IN ALL TIMES

2 — FIXTURES TO BE PROVIDED BY OWNER. 60W PER FIXTURE USED FOR LOADS CALCULATIONS

△	ISSUE	DATE
	PERMIT	12/1/00
	REVISION	1/19/01
	RFC	4/23/01

© COPYRIGHT 2000
THIS DOCUMENT, INCLUDING OF THE IDEAS INCLUDED HEREIN, IS THE PROPERTY OF BELFAY ENGINEERING. THE USE OF THIS DOCUMENT OR IDEAS WITHOUT THE WRITTEN CONSENT OF BELFAY ENGINEERING IS PROHIBITED.

ENGINEERED FOR:

qualityelectric
5154 WASHINGTON ST. DENVER, CO
1-303-295-4221

ENGINEERING BY:

BELFAY ENGINEERING
MECHANICAL/ELECTRICAL ENGINEERING
2401 W. 38TH AVENUE
DENVER, CO. 80204
303 892-5980 FAX 892-5979

WATER TOWER LOFTS

2960 INCA STREET
DENVER, COLORADO

JOB# 00208
FILE 00208E7
ENGINEERED BY ABM

E7

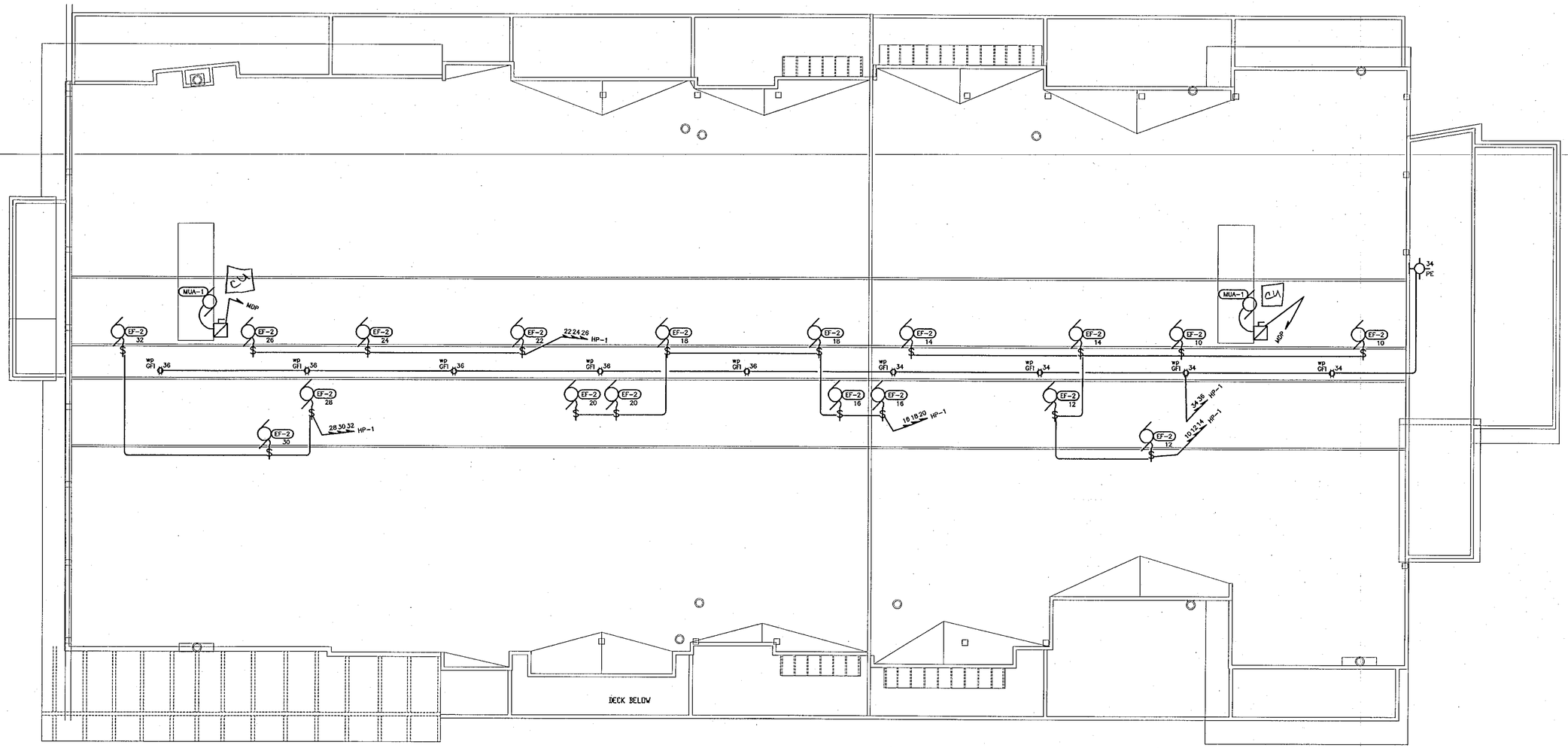

NORTH

ROOF POWER PLAN

SCALE 1/8"=1'-0"

NOTES

1 – THE SWITCHES FOR THE THE EXHAUST FANS (EF-2) ARE PROVIDE BY THE EXHAUST FAN MANUFACTURER.

2 – ALL ROOF TOP RECEPTACLES AND EXHAUST FANS WILL BE WIRE WITH #10 CU IN 3/4" CONDUIT.

3 – E.C TO WIRE THE TWO MAKE UP AIR UNITS (MUA-1) WITH (3-#1 THWN CU)1-1/2"C.

	ISSUE	DATE
	PERMIT	12/1/00
	REVISION	1/19/01
	RFC	4/23/01

© COPYRIGHT 2000
THIS DOCUMENT INCLUDING OF THE IDEAS INCORPORATED HEREIN IS THE PROPERTY OF BELFAY ENGINEERING AND MAY NOT BE USED THIS DOCUMENT OR IDEAS WITHOUT THE WRITTEN CONSENT OF BELFAY ENGINEERING IS PROHIBITED.

ENGINEERED FOR:

Quality Electric
5124 WASHINGTON ST. DENVER, CO
T-303-296-2221

ENGINEERING BY:

BELFAY ENGINEERING
MECHANICAL/ELECTRICAL ENGINEERING
2811 W. 9TH AVENUE
DENVER, CO. 80204
303 892-5980 FAX 892-5979

WATER TOWER LOFTS

2960 INCA STREET
DENVER, COLORADO

JOB# 00208
FILE 00208E8
ENGINEERED BY ABM

E8

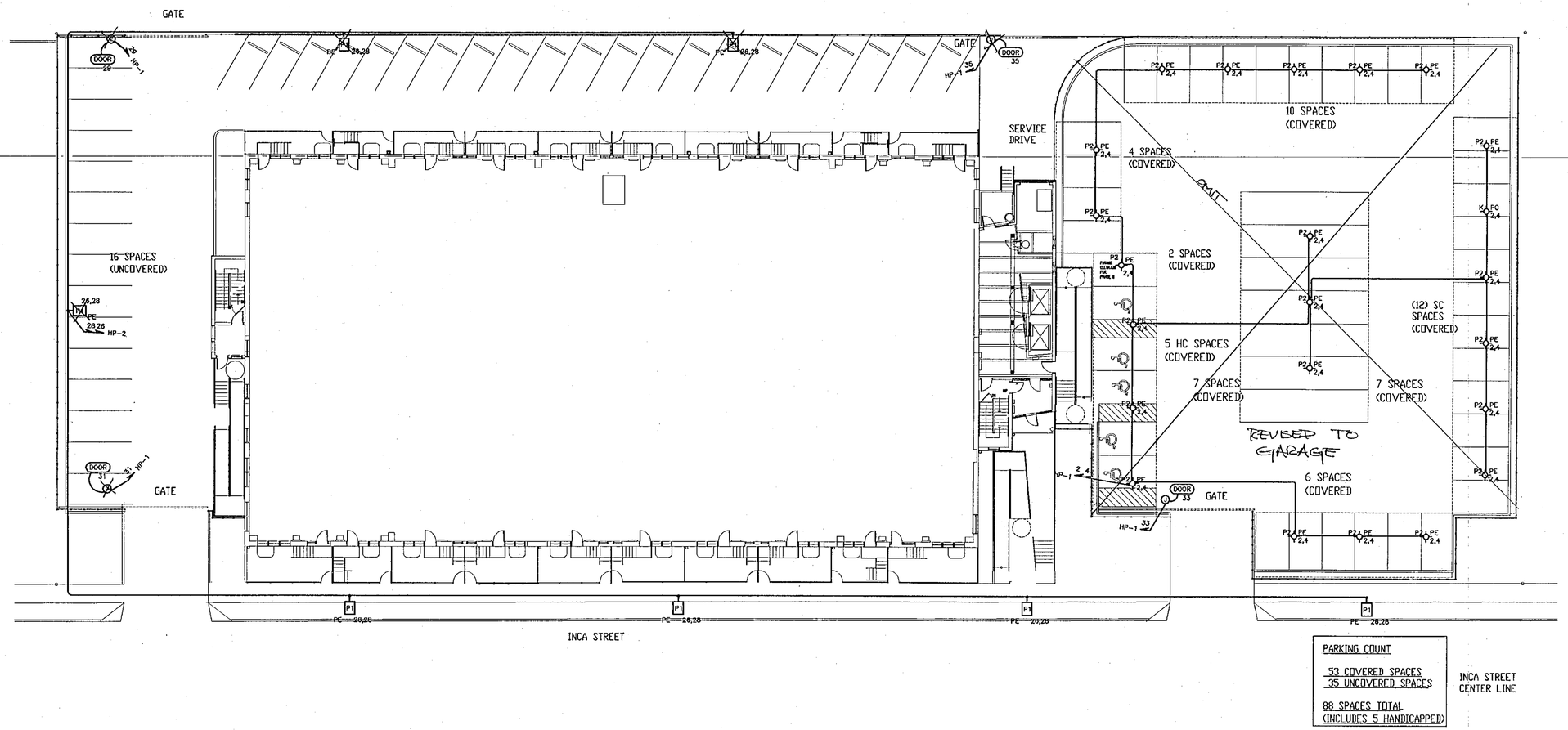

PARKING COUNT

53 COVERED SPACES
35 UNCOVERED SPACES

88 SPACES TOTAL
(INCLUDES 5 HANDICAPPED)

INCA STREET CENTER LINE

NOTES

1 — USE PHOTO CELL TO CONTROL THE PARKING LIGHTS
2 — FIXTURES TO BE PROVIDED BY OWNER
3 — E.C. TO COORDINATE EXACT LOCATION OF FIXTURES WITH ARCHITECT.

NORTH

SITE LIGHTING PLAN

SCALE 1/16" = 1'-0"

ISSUE	DATE
PERMIT	12/1/00
REVISION	1/18/01
REVISION	4/17/01
RFC	4/23/01

© COPYRIGHT 2000
THIS DOCUMENT INCLUSIVE OF THE IDEAS INCORPORATED HEREIN IS THE PROPERTY OF BELFAY ENGINEERING. ANY USE OF THIS DOCUMENT OR IDEAS WITHOUT THE WRITTEN CONSENT OF BELFAY ENGINEERING IS PROHIBITED.

ENGINEERED FOR:
Quality Electric
4124 WASHINGTON ST, DENVER, CO
1-303-295-2221

ENGINEERING BY:
BELFAY ENGINEERING
MECHANICAL ELECTRICAL ENGINEERING
2511 WEST 34TH AVENUE
DENVER, CO 80211
303 892-5980 FAX 892-5979

WATER TOWER LOFTS
2960 INCA STREET
DENVER, COLORADO

JOB# 00208
FILE 00208E9
ENGINEERED BY ABM

E9

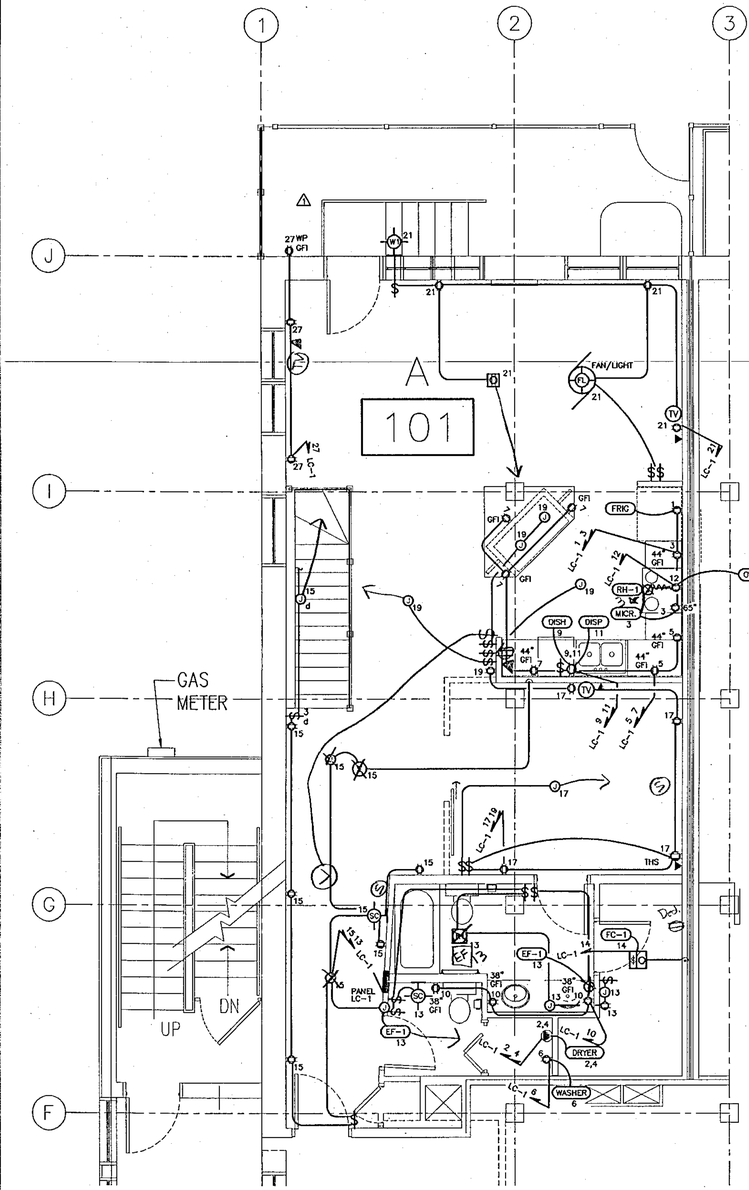

NORTH

TYPICAL FIRST FLOOR ELECTRICAL PLAN (LARGEST UNIT)

SCALE 1/4" = 1'-0"

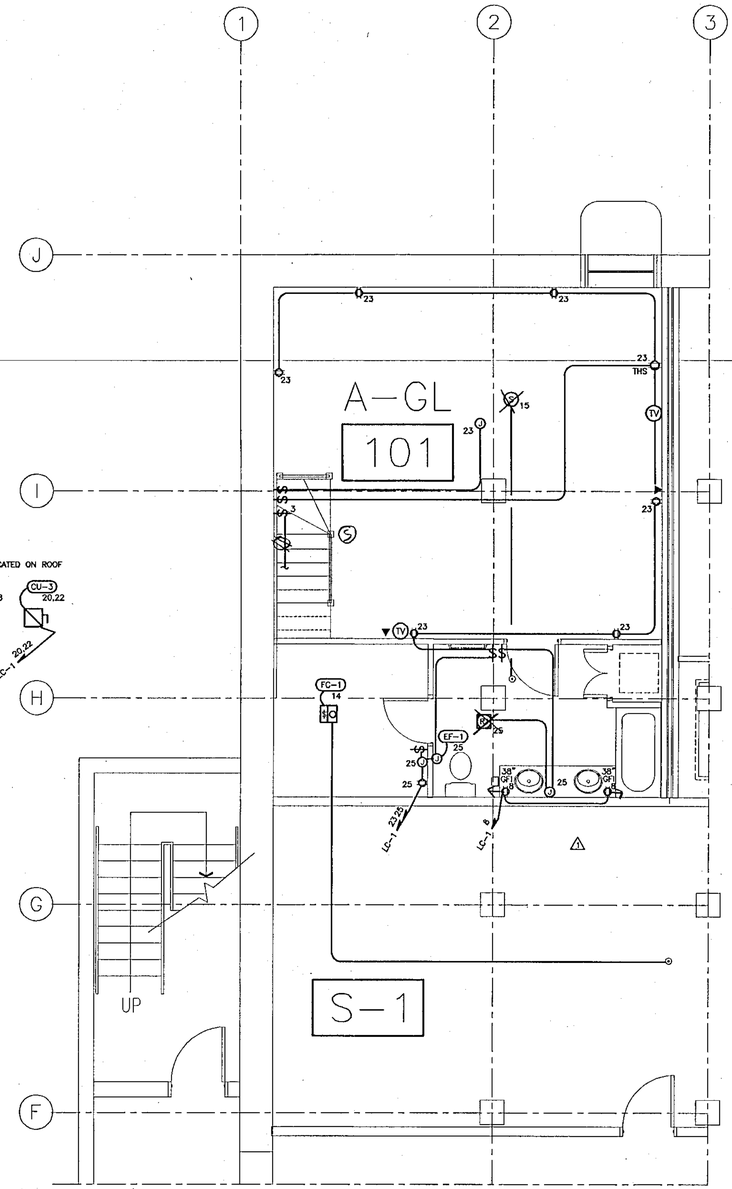

NORTH

TYPICAL BASEMENT ELECTRICAL PLAN (LARGEST UNIT)

SCALE 1/4" = 1'-0"

MAINS — 125
VOLT — 120/208
A.I.C. — 10,000 A

PANEL LC-1

MAIN BREAKER — 125
MOUNTING — FLUSH
OPTIONS —

CKT #	LOAD TYPE	LOAD DESCRIPTION	LOAD (VA)	CB AMPS	A	B	CB AMPS	LOAD (VA)	LOAD DESCRIPTION	LOAD TYPE	CKT #
1		REFRIGERATOR		20			30		DRYER		2
3		COUNTER		20			30		DRYER		4
5		COUNTER		20			20		WASHER		6
7		COUNTER		20			20		BATH		8
9		DISPOSAL		15			20		BATH		10
11		DISH WASHER		15			20		RH-1		12
13		BATH		20			20		FAN COILS		14
15		HALL, ~~SMOKE DETECTORS~~		15			20		CU-1		16
17		BEDROOM		15			20		CU-1		18
19		KITCHEN		15			30		CU-3		20
21		LIVING ROOM		15			30		CU-3		22
23		BASEMENT		15					Smoke det.		24
25		BASEMENT		15					Ded @ closet		26
27		LIVING ROOM		20							28
29											30
					A	B					

PANEL PHASE TOTAL (VA)

PANEL FEEDER DEMAND CALCULATIONS

LOAD TYPE	CONNECTED LOAD		DEMAND FACTOR		DEMAND
LIGHTING		X	1.25	=	
RECPTACLE <10 KVA		X	1.00	=	
RECPTACLE >10 KVA		X	.50	=	
LARGEST MOTOR		X	1.25	=	
MOTOR		X	1.00	=	
HEATER		X	1.00	=	
KITCHEN		X		=	
MISC		X	1.00	=	
SPARE		X	1.00	=	

SUBTOTALS: CONNECTED LOAD — VA DEMAND — VA DEMAND — AMPS
SUBFED PANEL DEMAND — AMPS
TOTAL PANEL FEEDER DEMAND — AMPS

NOTES

1 — THE ELECTRICAL PLAN SHOWN FOR UNIT 101 IS THE MODEL PLAN TO BE USED IN ALL UNITS ON FIRST FLOOR AND BASEMENT.
2 — CONDENSING UNITS ARE LOCATED ON THE ROOF, E.C. TO COORDINATE THEIR LOCATIONS WITH THE HVAC CONTRACTOR
3 — FIXTURES TO BE PROVIDED BY OWNER, 60W PER FIXTURE USED FOR LOADS CALCULATIONS
4 — E.C. TO VERIFY TYPE OF FIXTURES WITH OWNER AND ARCHITECT.

	ISSUE	DATE
	PERMIT	12/1/00
1	REVISION	1/19/01
	RFC	4/23/01

© COPYRIGHT 2000
THIS DOCUMENT INCLUSIVE OF THE IDEAS INCORPORATED HEREIN IS THE PROPERTY OF BELFAY ENGINEERING. ANY USE OF THIS DOCUMENT OR IDEAS WITHOUT THE WRITTEN CONSENT OF BELFAY ENGINEERING IS PROHIBITED.

ENGINEERED FOR:
Quality Electric
5124 WASHINGTON ST. DENVER, CO
1-303-322-2221

ENGINEERING BY:
BELFAY ENGINEERING
MECHANICAL/ELECTRICAL ENGINEERING
2811 W. 9TH AVENUE
DENVER, CO. 80204
303 892-5980 FAX 892-5979

WATER TOWER LOFTS

2960 INCA STREET
DENVER, COLORADO

JOB# 00208
FILE 00208E10A
ENGINEERED BY ABM

E10

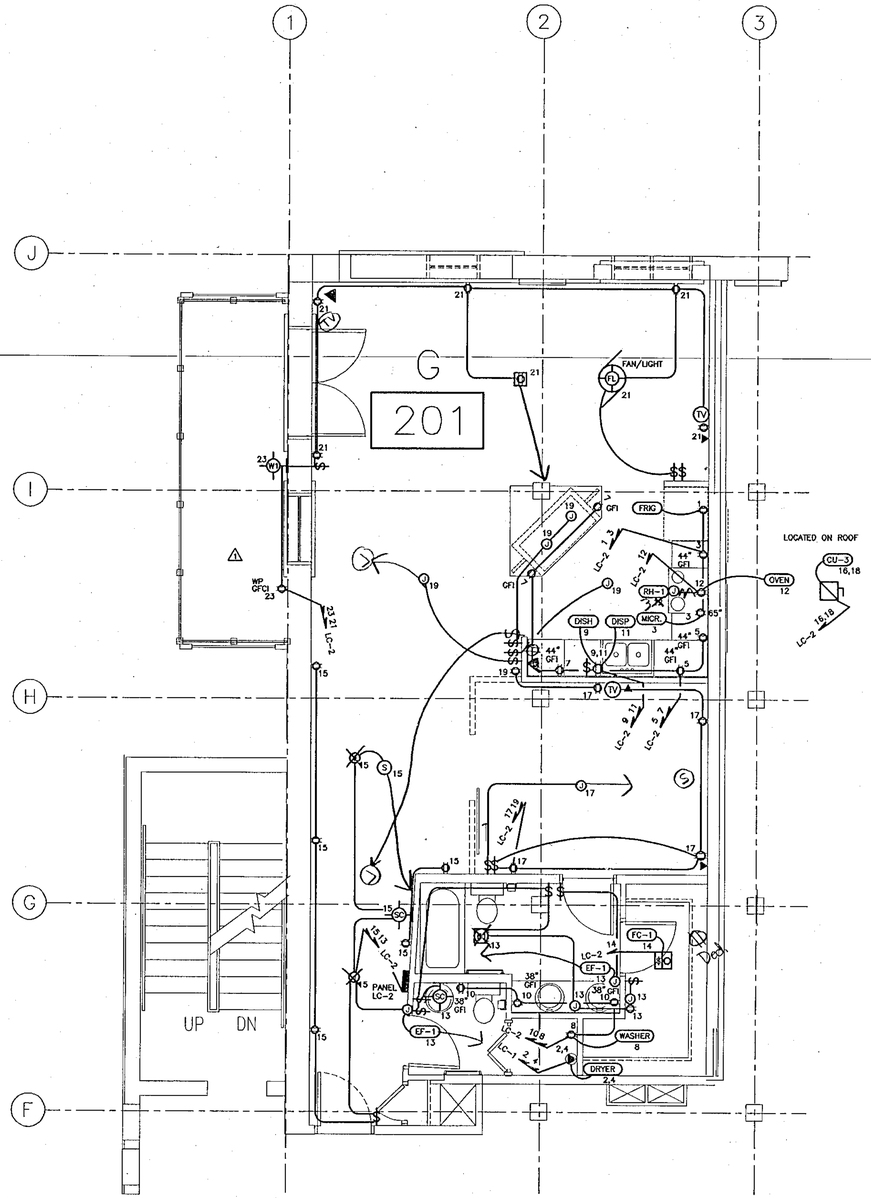

NORTH

TYPICAL SINGLE UNIT ELECTRICAL PLAN (LARGEST UNIT)

SCALE 1/4" = 1'-0"

PANEL LC-2

MAINS — 100
VOLT — 120/208
A.I.C. — 10,000 A

MAIN BREAKER — 100
MOUNTING — FLUSH
OPTIONS —

CKT #	LOAD TYPE	LOAD DESCRIPTION	LOAD (VA)	CB AMPS	A	B	CB AMPS	LOAD (VA)	LOAD DESCRIPTION	LOAD TYPE	CKT #
1		REFRIGERATOR		20			30		DRYER		2
3		COUNTER		20			30		DRYER		4
5		COUNTER		20							6
7		COUNTER		20			20		WASHER		8
9		DISPOSAL		15			20		BATH		10
11		DISH WASHER		15			20		RH-1		12
13		BATH		20			20		FAN COILS		14
15		HALL, SMOKE DETECTORS		15			30		CONDENSING UNIT-3		16
17		BEDROOM		15			30		CONDENSING UNIT-3		18
19		KITCHEN		15					Ded. @ closet		20
21		LIVING ROOM		15							22
23		BALCONY		20					Smoke Det.		24
25											26
27											28
29											30

A B

PANEL PHASE TOTAL (VA)

PANEL FEEDER DEMAND CALCULATIONS

LOAD TYPE	CONNECTED LOAD		DEMAND FACTOR		DEMAND
LIGHTING		X	1.25	=	
RECPTACLE <10 KVA		X	1.00	=	
RECPTACLE >10 KVA		X	.50	=	
LARGEST MOTOR		X	1.25	=	
MOTOR		X	1.00	=	
HEATER		X	1.00	=	
KITCHEN		X		=	
MISC		X	1.00	=	
SPARE		X	1.00	=	

SUBTOTALS: CONNECTED LOAD — VA DEMAND — VA DEMAND — AMPS
SUBFED PANEL DEMAND — AMPS
TOTAL PANEL FEEDER DEMAND — AMPS

PANEL LC-3

MAINS — 125
VOLT — 120/208
A.I.C. — 10,000 A

MAIN BREAKER — 125
MOUNTING — FLUSH
OPTIONS —

CKT #	LOAD TYPE	LOAD DESCRIPTION	LOAD (VA)	CB AMPS	A	B	CB AMPS	LOAD (VA)	LOAD DESCRIPTION	LOAD TYPE	CKT #
1		REFRIGERATOR		20			30		DRYER		2
3		COUNTER		20			30		DRYER		4
5		COUNTER		20			20		WASHER		6
7		COUNTER		20			20		FAN COILS		8
9		DISPOSAL		15			20		BATH		10
11		DISH WASHER		15			20		RH-1		12
13		BATH		20			20		BATH		14
15		HALL, SMOKE DETECTORS		15			30		CU-3		16
17		LIVING ROOM		15			30		CU-3		18
19		KITCHEN		15			30		CU-3		20
21		BEDROOM		15			30		CU-3		22
23		BEDROOM		15					Smoke Det.		24
25		BEDROOM		15					Ded. @ closet		26
27		CLOSET		15							28
29											30

A B

PANEL PHASE TOTAL (VA)

PANEL FEEDER DEMAND CALCULATIONS

LOAD TYPE	CONNECTED LOAD		DEMAND FACTOR		DEMAND
LIGHTING		X	1.25	=	
RECPTACLE <10 KVA		X	1.00	=	
RECPTACLE >10 KVA		X	.50	=	
LARGEST MOTOR		X	1.25	=	
MOTOR		X	1.00	=	
HEATER		X	1.00	=	
KITCHEN		X		=	
MISC		X	1.00	=	
SPARE		X	1.00	=	

SUBTOTALS: CONNECTED LOAD — VA DEMAND — VA DEMAND — AMPS
SUBFED PANEL DEMAND — AMPS
TOTAL PANEL FEEDER DEMAND — AMPS

NOTES

1 — THE ELECTRICAL PLAN SHOWN FOR UNIT 201 IS THE MODEL PLAN TO BE USED IN ALL UNITS ON SECOND THROUGH FOUR FLOOR.
2 — CONDENSING UNITS ARE LOCATED ON THE ROOF, E.C. TO COORDINATE THEIR LOCATIONS WITH THE HVAC CONTRACTOR
3 — FIXTURES TO BE PROVIDED BY OWNER. 60W PER FIXTURE USED FOR LOADS CALCULATIONS
4 — E.C. TO VERIFY TYPE OF FIXTURES WITH OWNER AND ARCHITECT.

	ISSUE	DATE
	PERMIT	12/1/00
1	REVISION	1/19/01
	RFC	4/23/01

© COPYRIGHT 2000
THIS DOCUMENT INCLUSIVE OF THE IDEAS INCORPORATED HEREIN IS THE PROPERTY OF BELFAY ENGINEERING. ANY USE OF THIS DOCUMENT OR IDEAS WITHOUT THE WRITTEN CONSENT OF BELFAY ENGINEERING IS PROHIBITED.

ENGINEERED FOR:
qualityElectric
6124 WASHINGTON ST. DENVER, CO
1-303-292-2221

ENGINEERING BY:
BELFAY ENGINEERING
MECHANICAL/ELECTRICAL ENGINEERING
2811 W. 9TH AVENUE
DENVER, CO 80204
303 892-5980 FAX 892-5979

WATER TOWER LOFTS
2960 INCA STREET
DENVER, COLORADO

JOB# 00208
FILE 00208E11A
ENGINEERED BY ABM

E11

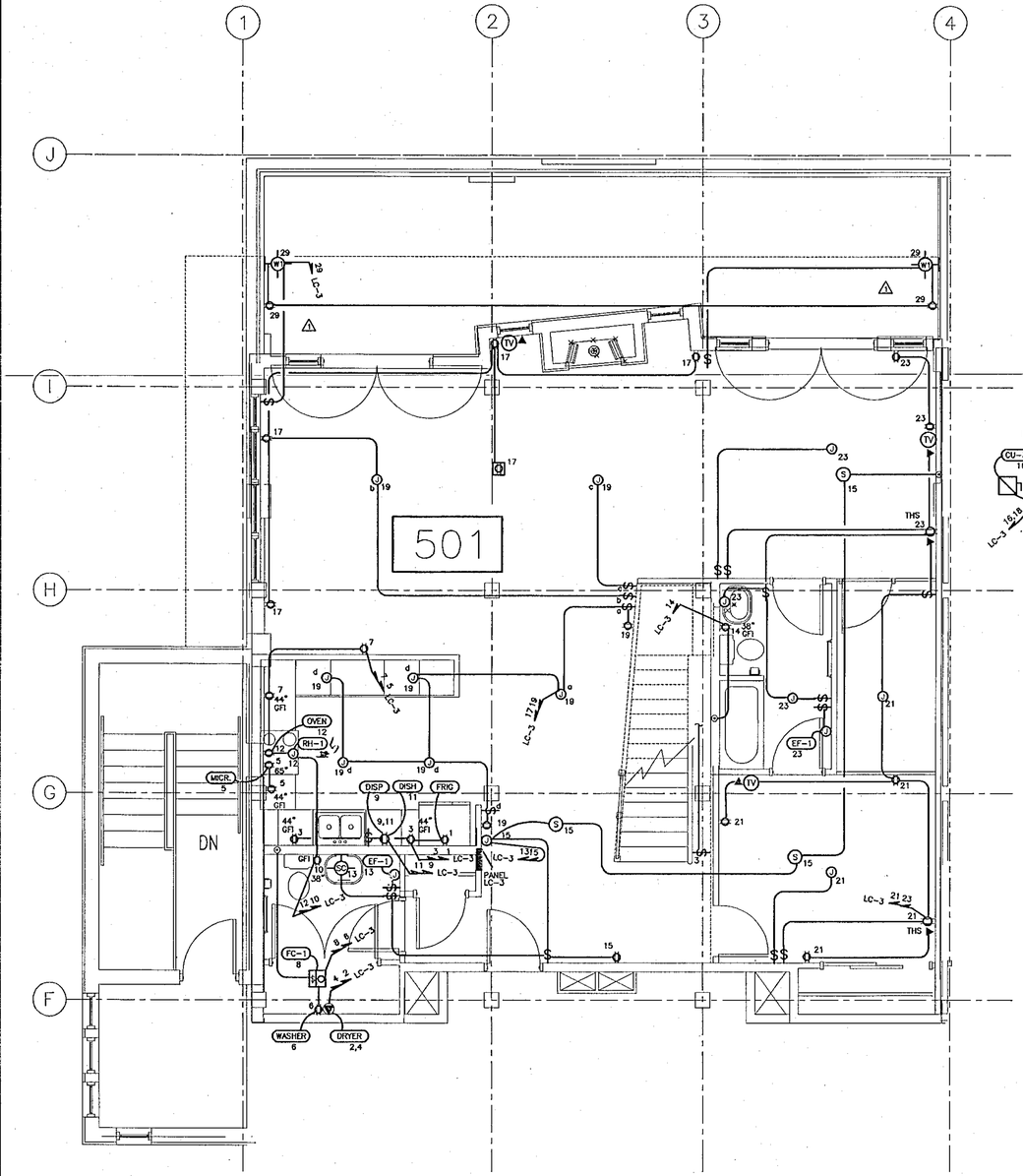

NORTH

TYPICAL FIFTH FLOOR ELECTRICAL PLAN (LARGEST UNIT)

SCALE 1/4" = 1'-0"

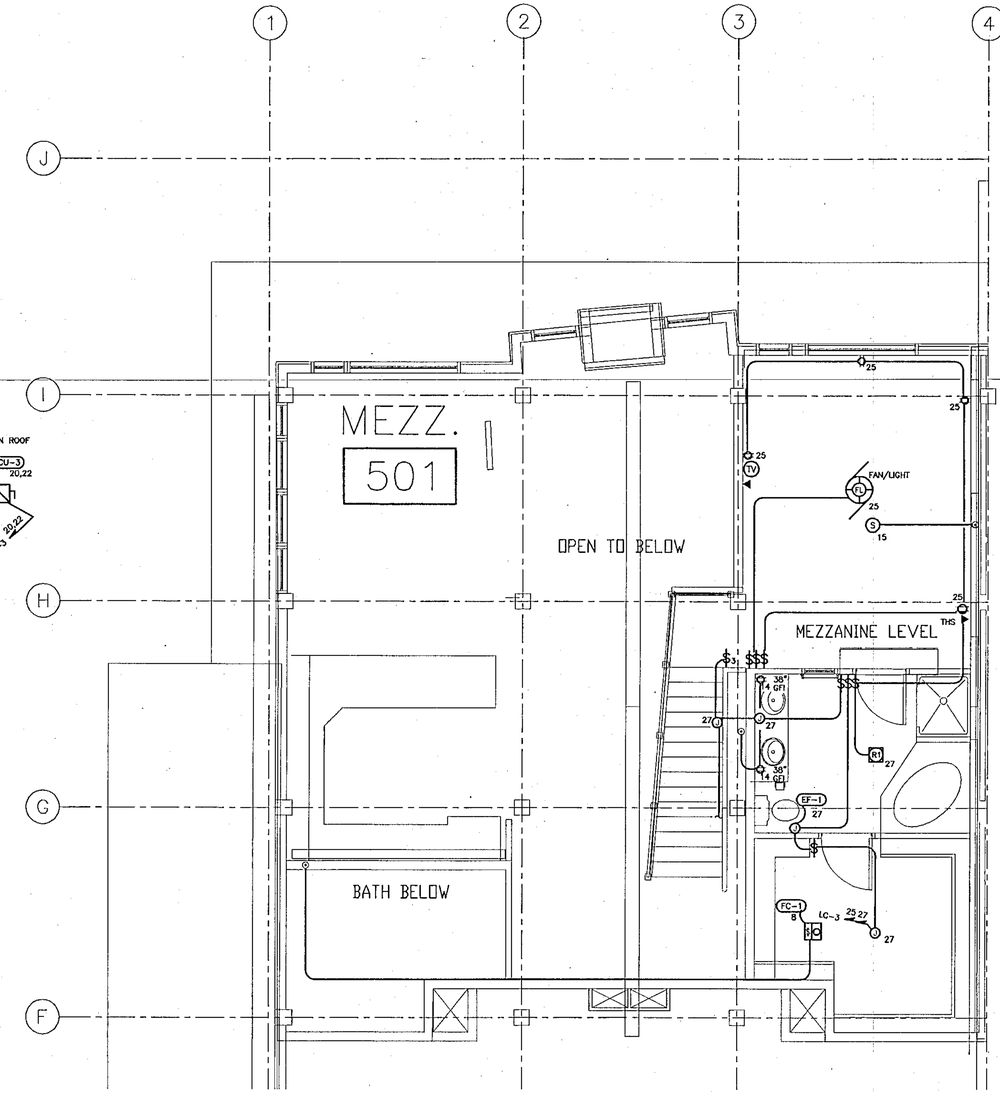

NORTH

TYPICAL MEZZANINE ELECTRICAL PLAN (LARGEST UNIT)

SCALE 1/4" = 1'-0"

NOTES

1 – THE ELECTRICAL PLAN SHOWN FOR UNIT 501 IS THE MODEL PLAN TO BE USED IN ALL UNITS ON FIFTH FLOOR AND MEZZANINE.
2 – CONDENSING UNITS ARE LOCATED ON THE ROOF, E.C. TO COORDINATE THEIR LOCATIONS WITH THE HVAC CONTRACTOR
3 – FIXTURES TO BE PROVIDED BY OWNER. 60W PER FIXTURE USED FOR LOADS CALCULATIONS
4 – E.C. TO VERIFY TYPE OF FIXTURES WITH OWNER AND ARCHITECT.

	ISSUE	DATE
	PERMIT	12/1/00
1	REVISION	1/19/01
	RFC	4/23/01

© COPYRIGHT 2000
THIS DOCUMENT INCLUSIVE OF THE IDEAS INCORPORATED HEREIN IS THE PROPERTY OF BELFAY ENGINEERING. ANY USE OF THIS DOCUMENT OR IDEAS WITHOUT THE WRITTEN CONSENT OF BELFAY ENGINEERING IS PROHIBITED.

ENGINEERED FOR:
Quality Electric
5124 WASHINGTON ST. DENVER, CO
1-303-296-2221

ENGINEERING BY:
BELFAY ENGINEERING
MECHANICAL/ELECTRICAL ENGINEERING
2811 W. 91TH AVENUE
DENVER, CO 80204
303 892-5980 FAX 892-5979

WATER TOWER LOFTS
2960 INCA STREET
DENVER, COLORADO

JOB# 00208
FILE 00208E12A
ENGINEERED BY ABM

E12

ONE LINE DIAGRAM

NO SCALE

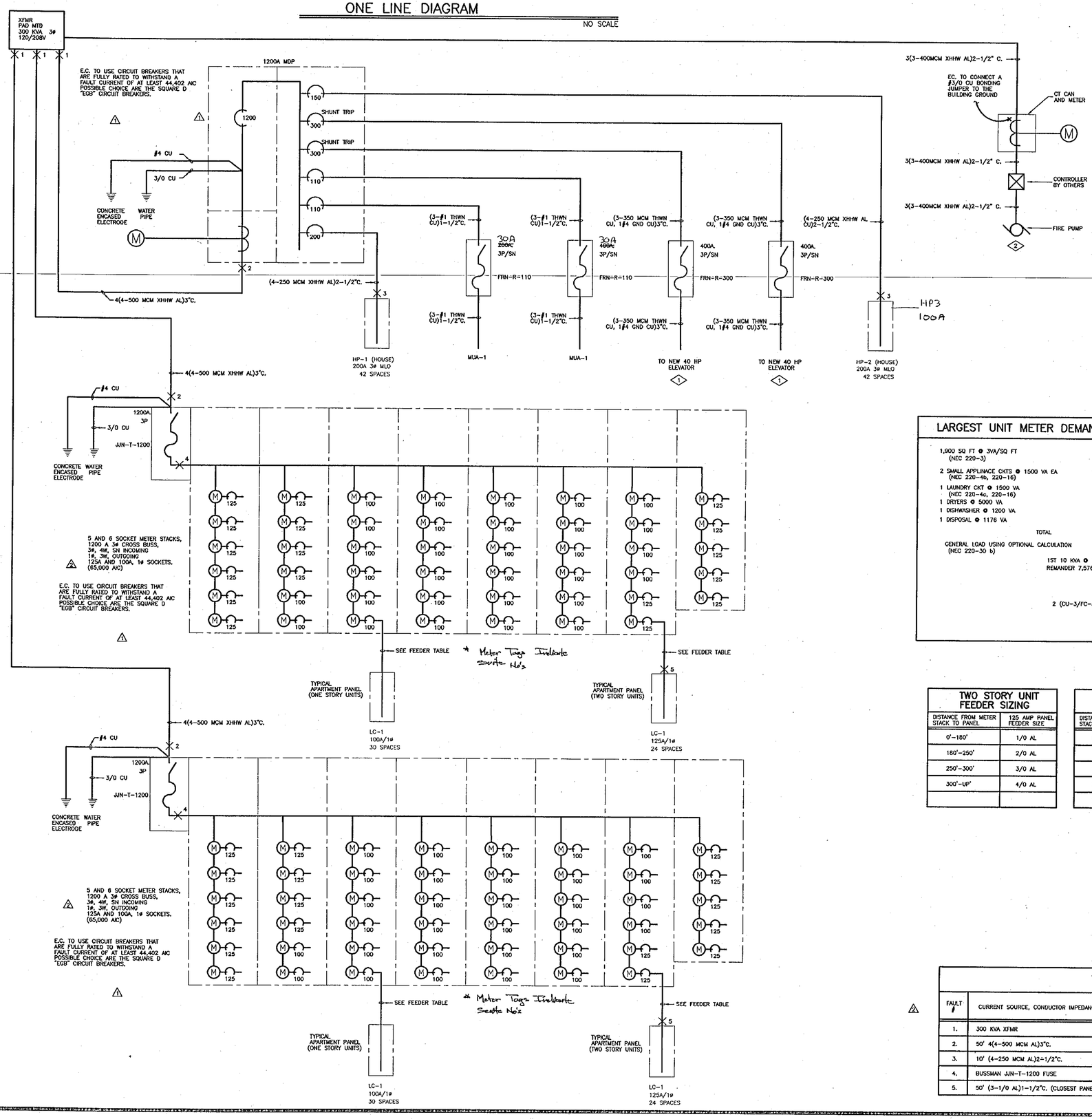

NOTES

1. E.C. TO VERIFY ELEVATOR REQUIREMENTS BEFORE INSTALLATION.
2. E.C. TO VERIFY FIRE PUMP REQUIREMENTS BEFORE INSTALLATION.

LARGEST UNIT METER DEMAND (TWO STORY UNIT)

1,900 SQ FT @ 3VA/SQ FT (NEC 220-3)	5,700 VA	
2 SMALL APPLINACE CKTS @ 1500 VA EA (NEC 220-4b, 220-16)	3,000 VA	
1 LAUNDRY CKT @ 1500 VA (NEC 220-4c, 220-16)	1,500 VA	
1 DRYERS @ 5000 VA	5,000 VA	
1 DISHWASHER @ 1200 VA	1,200 VA	
1 DISPOSAL @ 1176 VA	1,176 VA	
TOTAL	17,576 VA	
GENERAL LOAD USING OPTIONAL CALCULATION (NEC 220-30 b)		
1ST 10 KVA @ 1.00	10,000 VA	
REMANDER 7,576 @ 0.40	3,030 VA	
	13,030 VA	
		13,030 VA
2 (CU-3/FC-3) @ 4500 VA EA	9,000 VA	
TOTAL	22,030 VA	
TOTAL DEMAND AMPS	106 AMPS	

LARGEST UNIT METER DEMAND (ONE STORY UNIT)

1,300 SQ FT @ 3VA/SQ FT (NEC 220-3)	3,900 VA	
2 SMALL APPLINACE CKTS @ 1500 VA EA (NEC 220-4b, 220-16)	3,000 VA	
1 LAUNDRY CKT @ 1500 VA (NEC 220-4c, 220-16)	1,500 VA	
1 DRYERS @ 5000 VA	5,000 VA	
1 DISHWASHER @ 1200 VA	1,200 VA	
1 DISPOSAL @ 1176 VA	1,176 VA	
TOTAL	15,776 VA	
GENERAL LOAD USING OPTIONAL CALCULATION (NEC 220-30 b)		
1ST 10 KVA @ 1.00	10,000 VA	
REMANDER 5,776 @ 0.40	2,310 VA	
	12,310 VA	
		12,310 VA
1 (CU-3/FC-3) @ 4500 VA		4,500 VA
TOTAL		16,810 VA
TOTAL DEMAND AMPS		81 AMPS

TWO STORY UNIT FEEDER SIZING

DISTANCE FROM METER STACK TO PANEL	125 AMP PANEL FEEDER SIZE
0'-180'	1/0 AL
180'-250'	2/0 AL
250'-300'	3/0 AL
300'-UP'	4/0 AL

ONE STORY UNIT FEEDER SIZING

DISTANCE FROM METER STACK TO PANEL	100 AMP PANEL FEEDER SIZE
0'-160'	#2 AL
160'-200'	#1 AL
200'-240'	1/0 AL
240'-320'	2/0 AL
320'-UP	3/0 AL

LARGEST METER STACK DEMAND (47 UNITS)

54,000 SQ FT @ 3VA/SQ FT (NEC 220-3)	309,225 VA	162,000 VA
94 SMALL APPLINACE CKTS @ 1500 VA EA (NEC 220-4b, 220-16)		141,000 VA
47 LAUNDRY CKTS @ 1500 VA EA (NEC 220-4c, 220-16)		70,500 VA
47 DRYERS @ 5000 VA EA		235,000 VA
47 DISHWASHERS @ 1200 VA EA		56,400 VA
47 DISPOSALS @ 1176 VA EA		55,272 VA
28 (CU-1/FC-1) @ 3200 VA EA		89,600 VA
24 (CU-2/FC-2) @ 3800 VA EA		91,200 VA
16 (CU-3/FC-3) @ 4500 VA EA		72,000 VA
47 (SIMULATED ELEC. COOKING EQUIP) @ 8000 VA EA		376,000 VA
TOTAL		1,348,972 VA
EQUIVALENT 3ø LOAD		1,377,674 VA
NET COMPUTED LOAD USING OPTIONAL CALCULATION (NEC 220-32)		
1,377,674 VA X .26		358,195 VA
TOTAL DEMAND AMPS		995 AMPS

THREE PHASE FAULT CURRENT TABLE

FAULT #	CURRENT SOURCE, CONDUCTOR IMPEDANCE OR CURRENT LIMITING DEVICE	AVALIABLE SYM. FAULT CURRENT	PROTECTIVE DEVICE LET-THRU CURRENT	MAXIMUM AVAILABLE SYM. FAULT CURRENT	WITHSTAND RATING OF PROTECTED COMPONENT OR A.I.C. OF DEVICE	DESCRIPTION OF PROTECTED COMPONENT
1.	300 KVA XFMR	58,900 ISCA				
2.	50' 4(4-500 MCM AL)3"C.	44,402 ISCA				
3.	10' (4-250 MCM AL)2-1/2"C.	34,033 ISCA				
4.	BUSSMAN JJN-T-1200 FUSE	44,402 ISCA				
5.	50' (3-1/0 AL)1-1/2"C. (CLOSEST PANEL)	9,457 ISCA				

ISSUE	DATE
PERMIT	12/1/00
REVISION	1/19/01
REVISION	2/14/01
CONSTRUCTION	3/2/01
RFC	4/23/01

© COPYRIGHT 2000
THIS DOCUMENT, INCLUDING THE IDEAS INCORPORATED HEREIN IS THE PROPERTY OF BELFAY ENGINEERING. ANY USE OF THIS DOCUMENT OR IDEAS WITHOUT THE WRITTEN CONSENT OF BELFAY ENGINEERING IS PROHIBITED.

ENGINEERED FOR:
qualityelectric
6124 WASHINGTON ST. DENVER, CO
1-303-295-2221

ENGINEERING BY:
BELFAY ENGINEERING
MECHANICAL/ELECTRICAL ENGINEERING
2811 W. 9TH AVENUE
DENVER, CO 80204
303 892-5980 FAX 892-5979

WATER TOWER LOFTS
2960 INCA STREET
DENVER, COLORADO

JOB# 00208
FILE 00208E13
ENGINEERED BY ABM

E13

E.C. TO USE BREAKERS THAT ARE SERIES RATED TO WITHSTAND A FAULT OF AT LEAST 42,000 AIC. A POSSIBLE CHOICE IS TO USE GENERAL ELECTRIC'S "TED" BREAKERS WITH A "THED" MAIN.

MAINS — 200A
VOLT — 120/208
A.I.C. — SEE NOTE ABOVE

PANEL HP-1

MAIN BREAKER — NONE
MOUNTING — SURFACE
OPTIONS —

CKT #	LOAD TYPE	LOAD DESCRIPTION	LOAD (VA)	CB AMPS	A Ø B Ø C Ø	CB AMPS	LOAD (VA)	LOAD DESCRIPTION	LOAD TYPE	CKT #
1	LIGHT	BASEMENT	1380	20		20	805	PARKING LOT	LIGHT	2
3	LIGHT	MECH/ELEC/BATH	1380	20		20	805	Boiler ~~PARKING LOT~~ Lts	LIGHT	4
5	LIGHT	BASEMENT	1440	20		20	200	ELEV/LTS	LIGHT	6
7	LIGHT	STORAGE ROOMS	1500	20		20	300	LOBBY	LIGHT	8
9	LIGHT	FIRST FLOOR	1500	20		20	1192	EF-2	MOTOR	10
11	LIGHT	FIRST FLOOR	1680	20		20	1192	EF-2	MOTOR	12
13	LIGHT	SECOND FLOOR	1680	20		20	1192	EF-2	MOTOR	14
15	LIGHT	SECOND FLOOR	1620	20		20	1192	EF-2	MOTOR	16
17	LIGHT	THIRD FLOOR	1680	20		20	1192	EF-2	MOTOR	18
19	LIGHT	THIRD FLOOR	1620	20		20	1192	EF-2	MOTOR	20
21	LIGHT	FOURTH FLOOR	1680	20		20	596	EF-2	MOTOR	22
23	LIGHT	FOURTH FLOOR	1620	20		20	596	EF-2	MOTOR	24
25	LIGHT	FIFTH FLOOR	1620	20		20	596	EF-2	MOTOR	26
27	LIGHT	FIFTH AND MEZZANINE	1740	20		20	596	EF-2	MOTOR	28
29	MOTOR	Time Clock ~~DOOR OPENER~~	1176	20		20	596	EF-2	MOTOR	30
31	MOTOR	Pole Lights ~~DOOR OPENER~~ W. Side	1176	20		20	596	EF-2	MOTOR	32
33	MOTOR	Outside lights N. Side ~~DOOR OPENER~~	1176	20		20	900	ROOF TOP RECPS	RECP	34
35	MOTOR	Spare ~~DOOR OPENER~~	1176	20		20	720	ROOF TOP RECPS	RECP	36
37	LIGHT	ATTIC MEZZANINE LEVEL	680	20		20	600	~~WATER COOLER~~	RECP	38
39						20	350	~~WORKOUT ROOM~~	RECP	40
41										42

	AØ	BØ	CØ
PANEL PHASE TOTAL (VA)	15137	14737	13268

PANEL FEEDER DEMAND CALCULATIONS

LOAD TYPE	CONNECTED LOAD		DEMAND FACTOR		DEMAND
LIGHTING	24930	X	1.25	=	31163
RECPTACLE <10 KVA	2780	X	1.00	=	2780
RECPTACLE >10 KVA		X	.50	=	
LARGEST MOTOR	1192	X	1.25	=	1490
MOTOR	14240	X	1.00	=	14240
HEATER		X	1.00	=	
KITCHEN		X		=	
MISC		X	1.00	=	
SPARE		X	1.00	=	

SUBTOTALS: CONNECTED LOAD — 43142 VA DEMAND — 49673 VA DEMAND — 138 AMPS
SUBFED PANEL DEMAND ___ AMPS
TOTAL PANEL FEEDER DEMAND 138 AMPS

E.C. TO USE BREAKERS THAT ARE SERIES RATED TO WITHSTAND A FAULT OF AT LEAST 42,000 AIC. A POSSIBLE CHOICE IS TO USE GENERAL ELECTRIC'S "TED" BREAKERS WITH A "THED" MAIN.

MAINS — 200A
VOLT — 120/208
A.I.C. — SEE NOTE ABOVE

PANEL HP-2

MAIN BREAKER — NONE
MOUNTING — SURFACE
OPTIONS —

CKT #	LOAD TYPE	LOAD DESCRIPTION	LOAD (VA)	CB AMPS	A Ø B Ø C Ø	CB AMPS	LOAD (VA)	LOAD DESCRIPTION	LOAD TYPE	CKT #
1	MOTOR	P-1	1800	20		20	1800	P-3	MOTOR	2
3	MOTOR	P-1	1800	20		20	1800	P-3	MOTOR	4
5	MOTOR	P-1	1800	20		20	1800	P-3	MOTOR	6
7	MOTOR	P-2	790	20		20	1800	P-3	MOTOR	8
9	MOTOR	P-2	790	20		20	1800	P-3	MOTOR	10
11	RECP	WH	720	20		20	1800	P-3	MOTOR	12
13	RECP	WH	720	20		20	1800	P-3	MOTOR	14
15	MOTOR	LOUVER	200	20		20	1800	P-3	MOTOR	16
17	MOTOR	P-4	1456	20		20	1800	P-3	MOTOR	18
19	MOTOR	FA Pump Controls ~~P-4~~	1456	20		20	1800	P-3	MOTOR	20
21	MOTOR	P-4	1456	20		20	1800	P-3	MOTOR	22
23	MOTOR	~~P-4~~	1456	20		20	1800	P-3	MOTOR	24
25	MOTOR	ROLL-UP DOOR	1000	20		~~30~~	613	HP3 ~~PARKING LOT~~	LIGHT	26
27	LIGHT	SIGN	1200	20		~~30~~	613	HP3 ~~PARKING LOT~~	LIGHT	28
29		Spare						HP3		30
31		FA Main Control						Work out rm		32
33		FA S. Dampers						"		34
35		FA Door holders						WH		36
37		FA N. Dampers						WH		38
39								Elev. Sump		40
41										42

	AØ	BØ	CØ
PANEL PHASE TOTAL (VA)	13579	13259	12632

PANEL FEEDER DEMAND CALCULATIONS

LOAD TYPE	CONNECTED LOAD		DEMAND FACTOR		DEMAND
LIGHTING	2426	X	1.25	=	3033
RECPTACLE <10 KVA	1440	X	1.00	=	1440
RECPTACLE >10 KVA		X	.50	=	
LARGEST MOTOR	5400	X	1.25	=	6750
MOTOR	30204	X	1.00	=	30204
HEATER		X	1.00	=	
KITCHEN		X		=	
MISC		X	1.00	=	
SPARE		X	1.00	=	

SUBTOTALS: CONNECTED LOAD — 39470 VA DEMAND — 41427 VA DEMAND — 115 AMPS
SUBFED PANEL DEMAND ___ AMPS
TOTAL PANEL FEEDER DEMAND 115 AMPS

HP3 120/208 3 phase

1 - S. Stair Heater	2 Drypoint Sensor
3 - "	4 " " "
5 - N. Stair Heater	6 " " "
7 - "	8 " " "
9 - Garbage chute	10 Space Heater Vest.
11 - elev. pit	12 Phone Ⓟ
13 - E. elev. car lights	14 TV Ⓟ
15 - spare	16 Shunt trip
17 - W. elev. car lights	18 spare
19 - spare	20
21 -	22
23 -	24
25 -	26
27 -	28
29 -	30
31 -	32
33 -	34
35 -	36
37 -	38
39 -	40
41 -	42

EQUIPMENT SCHEDULE

PLAN CODE	DESCRIPTION	HP	VOLT	PH	LOAD (VA)	AMPS (FLA)	MIN CKT*	MAX FUSE	BRANCH CKT PROTECTION TYPE	RATING	LOCATION	BRANCH CIRCUIT WIRE AND CONDUIT SIZE	DISCONNECTING MEANS TYPE	RATING	FUSE	LOCATION	FURN	MOUNT	MOTOR O.L. LOCATION	SPECIFIC NOTES
EF-1	EXHAUST FAN		120	1	30	.25			CB	15		(2-#14 THWN CU)1/2" C.	SW				ELEC.	ELEC.	BY MANUF.	
EF-2	EXHAUST FAN		120	1	596	4.97			CB	20		(2-#12 THWN CU)1/2" C.	SW				ELEC.	ELEC.	BY MANUF.	
RH-1	RANGE HOOD		120	1	20	8.2			CB	15		(2-#12 THWN CU)1/2" C.				EQUIPMENT	MECH.	MECH.	BY MANUF.	
FC-1	FAN COIL		120	1	486	4.05			CB	20		(2-#12 THWN CU)1/2" C.	SSU				MECH.	MECH.	BY MANUF.	
FC-2	FAN COIL		120	1	576	4.8			CB	20		(2-#12 THWN CU)1/2" C.	SSU				MECH.	MECH.	BY MANUF.	
FC-3	FAN COIL		120	1	486	4.05			CB	20		(2-#12 THWN CU)1/2" C.	SSU				MECH.	MECH.	BY MANUF.	
CU-1	CONDENSING UNIT		208	1	2704		13	20	CB	20		(3-#8 THWN CU)3/4" C.	FSW	20	FRN-R-20		ELEC.	ELEC.	BY MANUF.	
CU-2	CONDENSING UNIT		208	1	3224		15.5	20	CB	20		(3-#8 THWN CU)3/4" C.	FSW	20	FRN-R-20		MECH.	MECH.	BY MANUF.	
CU-3	CONDENSING UNIT		208	1	4014		19.3	30	CB	30		(3-#8 THWN CU)3/4" C.	FSW	30	FRN-R-30		MECH.	MECH.	BY MANUF.	
MUA-1	MAKE UP AIR		208	3	39,240		109	110	CB	110		(3-#1 THWN CU)1-1/2" C.	FSW	200	FRN-R-110		ELEC.	ELEC.	BY MANUF.	
ELEVATOR	ELEVATOR		208	3	51120		142	300	CB	300		(3-350 MCM THWN CU)3"C.	FSW	400	FRN-R-300		ELEC.	ELEC.	BY MANUF.	
P-1	PUMP		208	3	2700	7.5			CB	20		(3-#12 THWN CU)1/2"C.	FSW	20	FRN-R-20		ELEC.	ELEC.	BY MANUF.	
P-2	PUMP		208	1	1580	7.6			CB	20		(3-#12 THWN CU)1/2"C.	FSW	20	FRN-R-20		ELEC.	ELEC.	BY MANUF.	
P-3	PUMP		208	3	2700	7.5			CB	20		(3-#12 THWN CU)1/2"C.	FSW	20	FRN-R-20		ELEC.	ELEC.	BY MANUF.	
P-4	EJECTOR PUMP		208	1	2912	14			CB	20		(2-#12 THWN CU)1/2"C.	FSW	20	FRN-R-20		ELEC.	ELEC.	BY MANUF.	
LOUV	LOUVER	1/4	120	1		1.5			CB	20		(2-#12 THWN CU)1/2"C.	SW	20			ELEC.	ELEC.	BY MANUF.	
WH-1	WATER HEATER		120	1	180	1.5			CB	20		(2-#12 THWN CU)1/2"C.	RECP				ELEC.	ELEC.	BY MANUF.	

LIGHTING FIXTURE SCHEDULE

PLAN CODE	LUMINAIRE SPECIFICATION: DESCRIPTION	SIZE (L X W X D)	FINISH	VOLT	MANUFACTURER	CATALOG NUMBER	MOUNTING METHOD	LAMP SPECIFICATION: QTY	TYPE	ANSI TYPE	BASE	INITL LUMENS	VOLT	WATTS	COLOR TEMP. (KELVINS)	BALLAST SPECIFICATION: VOLTS	INPUT VA	DESCRIPTION	MANUFACTURER	CATALOG NUMBER	NOTES
X1	EXIT LIGHT BATT BACK	13" X 1" X 2"	GRN & WHITE	120	SURE-LITES	CCX70GWH120	UNIVERSAL		LED												
X2	EMERGENCY LIGHT	23" X 7" x 3"	WHITE	120	PRESCOLITE	ERT5	RECESSED	2													
P1	POLE LIGHT	12'		208			POLE	1						175							1
P2	CANOPY LT			208			SURFACE	1						70							1
W	WALL PACK			208			SURFACE	1						175							1

NOTES: 1 — PROVIDE WITH PHOTOELECTRIC CONTROL.

	ISSUE	DATE
	PERMIT	12/1/00
	REVISION	1/19/01
	CONSTRUCTION	3/2/01
	RFC	4/23/01

© COPYRIGHT 2000
THIS DOCUMENT INCLUDES OF THE IDEAS INCORPORATED HEREIN IS THE PROPERTY OF BELFAY ENGINEERING. ANY USE OF THIS DOCUMENT OR IDEAS WITHOUT THE WRITTEN CONSENT OF BELFAY ENGINEERING IS PROHIBITED.

ENGINEERED FOR:
Quality Electric
5124 WASHINGTON ST. DENVER, CO
1-303-295-2221

ENGINEERING BY:
BELFAY ENGINEERING
MECHANICAL/ELECTRICAL ENGINEERING
2811 W. 9TH AVENUE
DENVER, CO 80204
303 892-5980 FAX 892-5979

WATER TOWER LOFTS
2960 INCA STREET
DENVER, COLORADO

JOB# 00208
FILE 00208E14
ENGINEERED BY ABM

E14

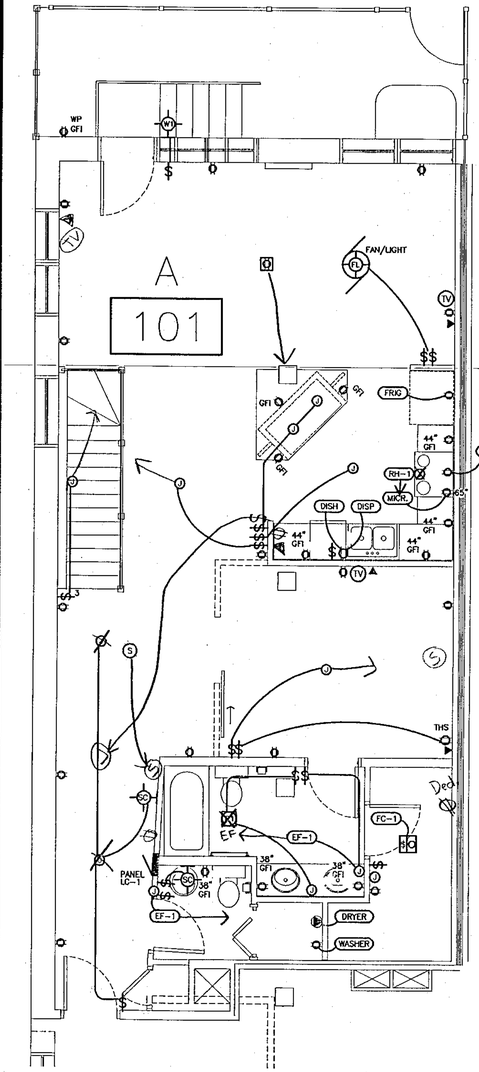

NORTH

TYPICAL UNIT A UPPER LEVEL

SCALE 1/4" = 1'-0"

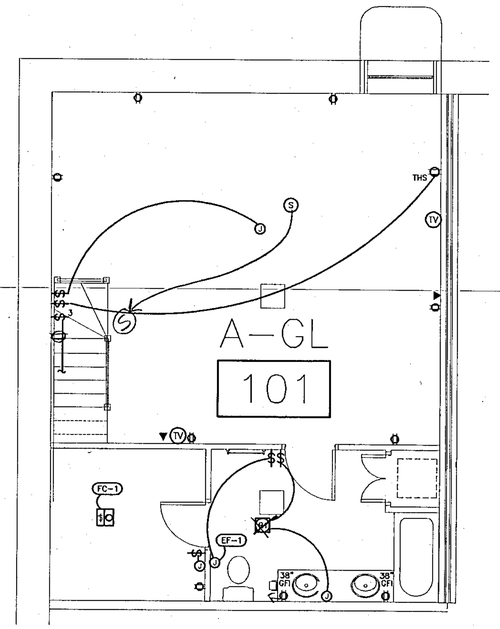

NORTH

TYPICAL UNIT A LOWER LEVEL

SCALE 1/4" = 1'-0"

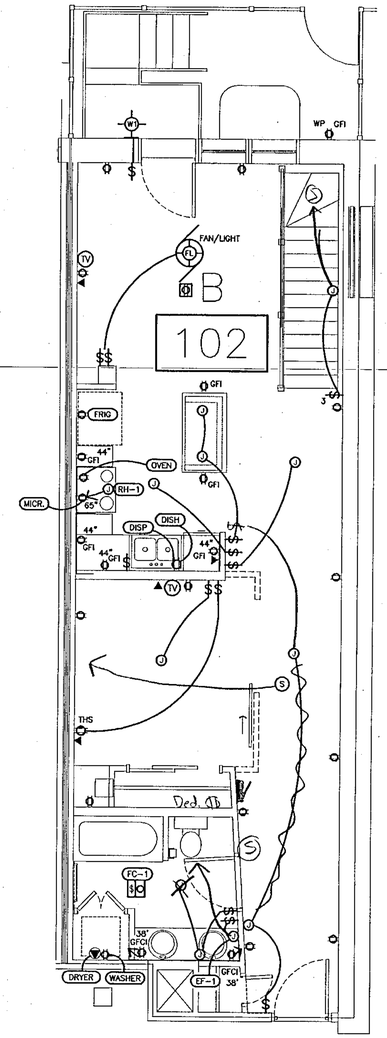

NORTH

TYPICAL UNIT B UPPER LEVEL

SCALE 1/4" = 1'-0"

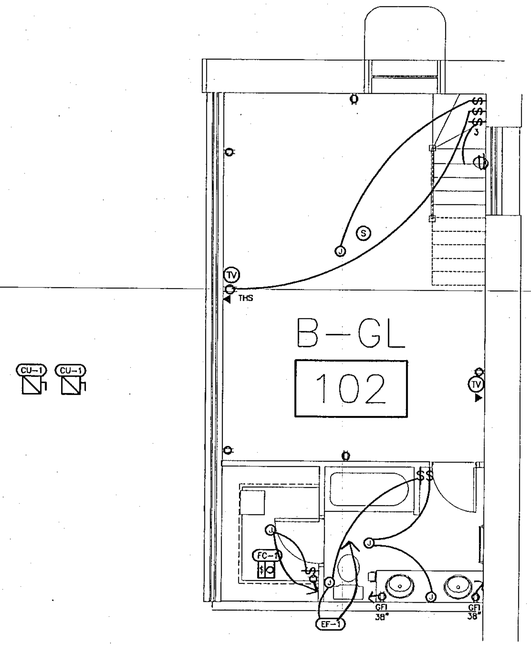

NORTH

TYPICAL UNIT B LOWER LEVEL

SCALE 1/4" = 1'-0"

ISSUE	DATE
PERMIT	12/1/00
REVISION	1/19/01
RFC	4/23/01

© COPYRIGHT 2000
THIS DOCUMENT INCLUSIVE OF THE IDEAS INCORPORATED HEREIN IS THE PROPERTY OF BELFAY ENGINEERING. ANY USE OF THIS DOCUMENT OR IDEAS WITHOUT THE WRITTEN CONSENT OF BELFAY ENGINEERING IS PROHIBITED.

ENGINEERED FOR:

qualityElectric
5124 WASHINGTON ST. DENVER, CO
P.303-292-9221

ENGINEERING BY:

BELFAY ENGINEERING
MECHANICAL/ELECTRICAL ENGINEERING
2811 W. 5TH AVENUE
DENVER, CO 80204
303 892-5980 FAX 892-5979

WATER TOWER LOFTS

2960 INCA STREET
DENVER, COLORADO

JOB# 00208
FILE 00208E15
ENGINEERED BY ABM

E15

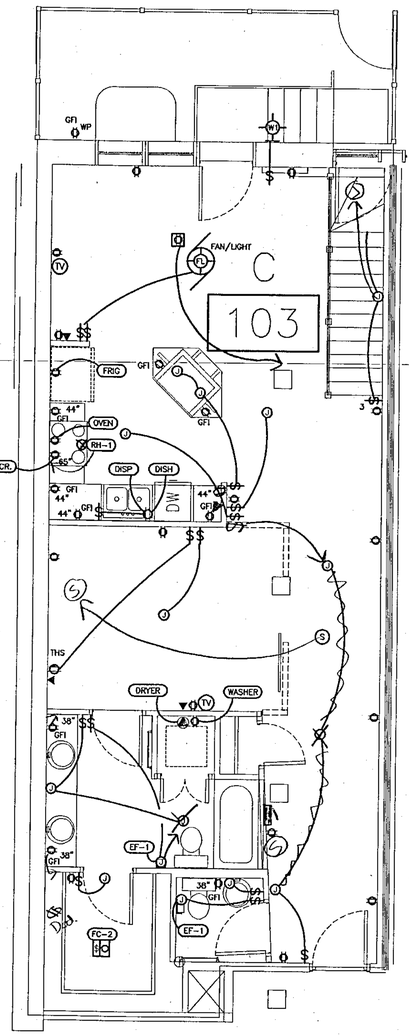

NORTH

TYPICAL UNIT C UPPER LEVEL

SCALE 1/4" = 1'-0"

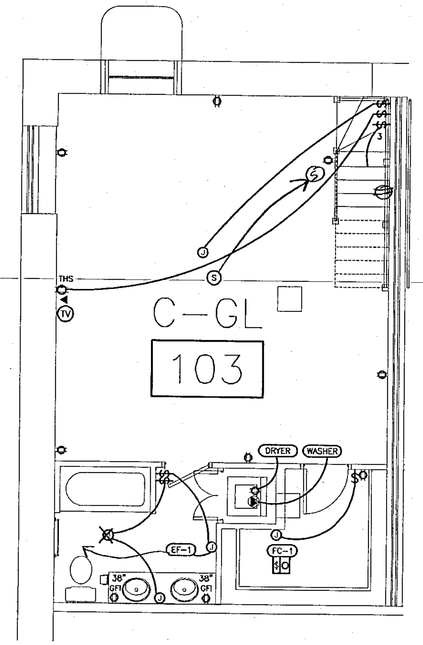

NORTH

TYPICAL UNIT C LOWER LEVEL

SCALE 1/4" = 1'-0"

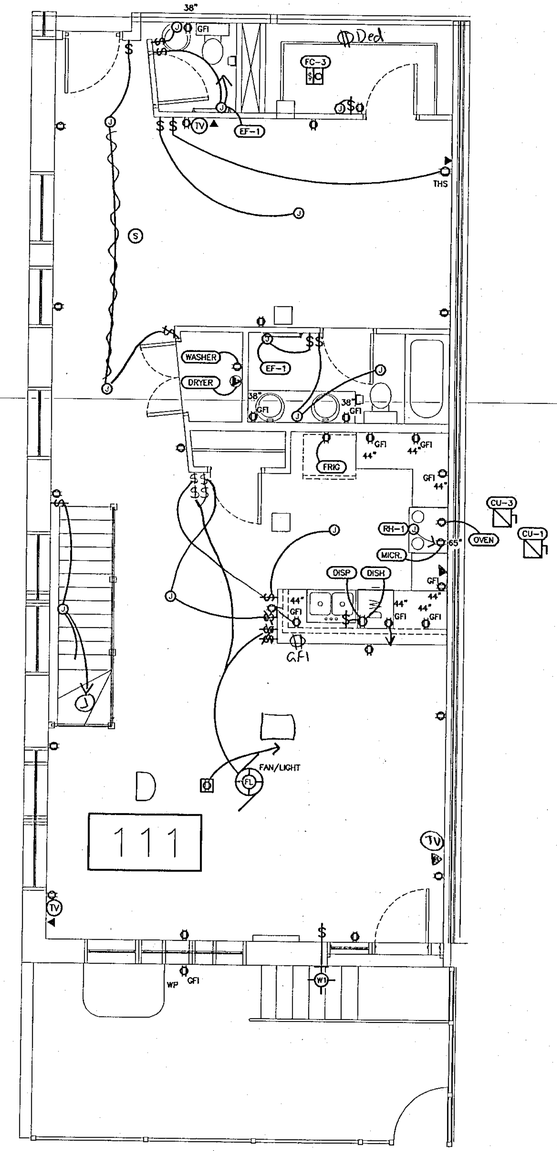

NORTH

TYPICAL UNIT D UPPER LEVEL

SCALE 1/4" = 1'-0"

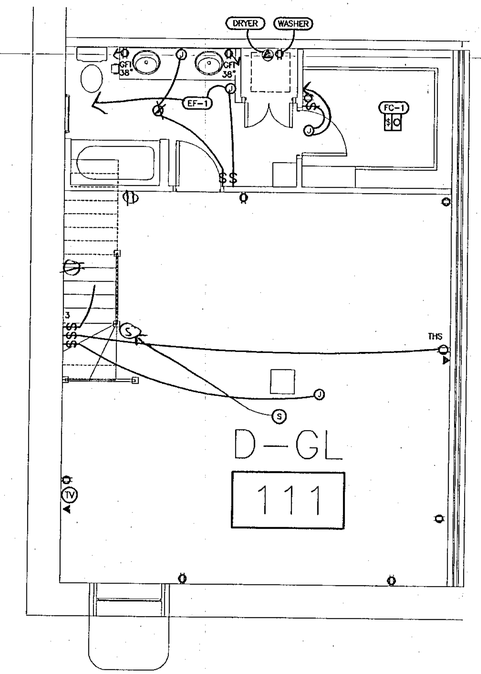

NORTH

TYPICAL UNIT D LOWER LEVEL

SCALE 1/4" = 1'-0"

ISSUE	DATE
PERMIT	12/1/00
REVISION	1/19/01
RFC	4/23/01

© COPYRIGHT 2000
THIS DOCUMENT INCLUSIVE OF THE IDEAS INCORPORATED HEREIN IS THE PROPERTY OF BELFAY ENGINEERING. ANY USE OF THIS DOCUMENT OR IDEAS WITHOUT THE WRITTEN CONSENT OF BELFAY ENGINEERING IS PROHIBITED.

ENGINEERED FOR:

Quality Electric
5124 WASHINGTON ST. DENVER, CO
1-303-295-2221

ENGINEERING BY:

BELFAY ENGINEERING
MECHANICAL/ELECTRICAL ENGINEERING
2811 W. 9TH AVENUE
DENVER, CO 80204
303 892-5980 FAX 892-5979

WATER TOWER LOFTS

2960 INCA STREET
DENVER, COLORADO

JOB# 00208
FILE 00208E16
ENGINEERED BY ABM

E16

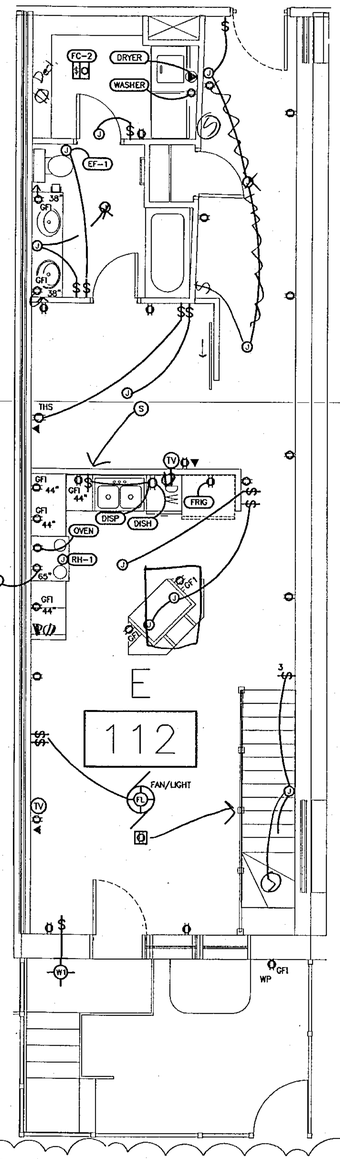

NORTH

TYPICAL UNIT E UPPER LEVEL

SCALE 1/4" = 1'-0"

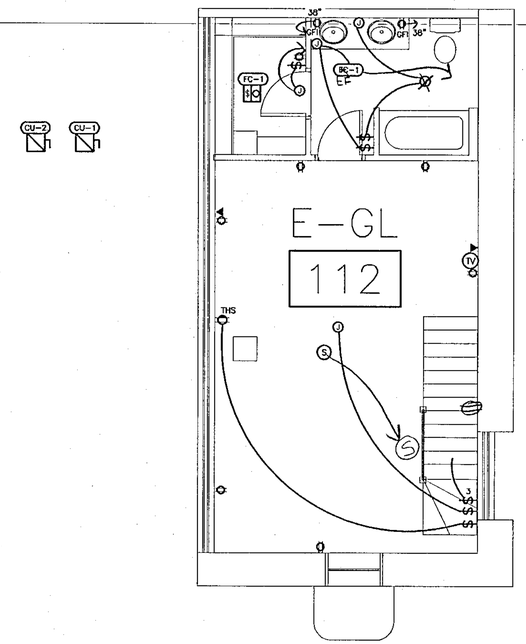

NORTH

TYPICAL UNIT E LOWER LEVEL

SCALE 1/4" = 1'-0"

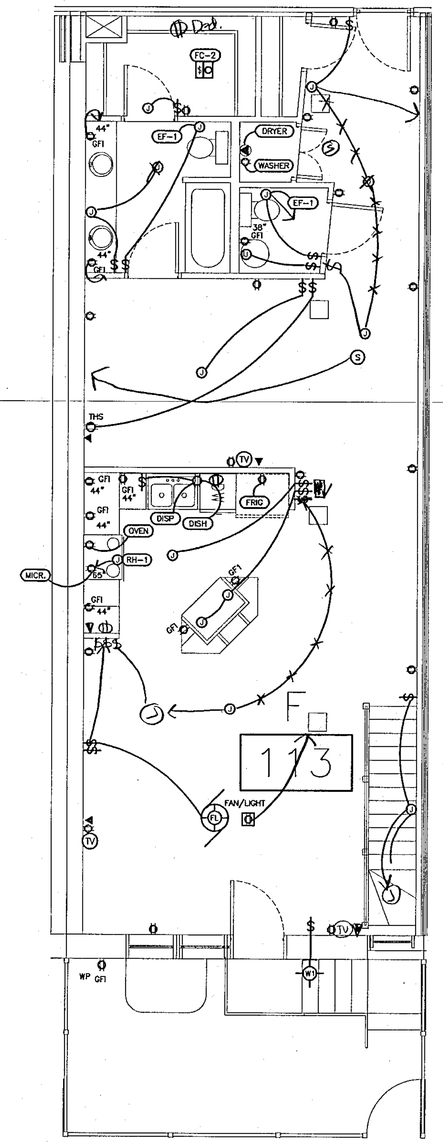

NORTH

TYPICAL UNIT F UPPER LEVEL

SCALE 1/4" = 1'-0"

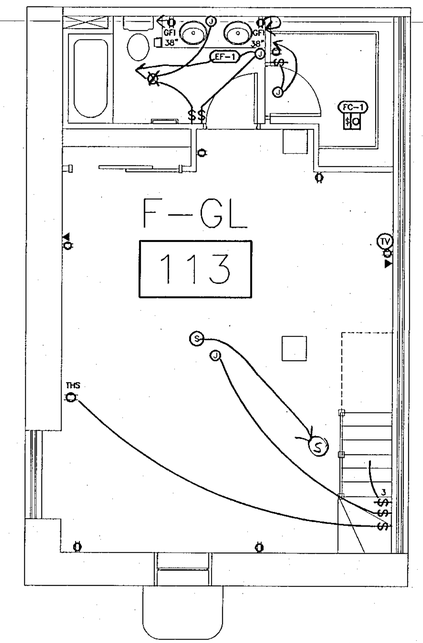

NORTH

TYPICAL UNIT F LOWER LEVEL

SCALE 1/4" = 1'-0"

	ISSUE	DATE
	PERMIT	12/1/00
	REVISION	1/19/01
	CONSTRUCTION	3/2/01
3	REVISION	4/17/01
	RFC	4/23/01

© COPYRIGHT 2000
THIS DOCUMENT, INCLUSIVE OF THE IDEAS INCORPORATED HEREIN IS THE PROPERTY OF BELFAY ENGINEERING AND IS COPYRIGHTED. DOCUMENT OR IDEAS WITHOUT THE WRITTEN CONSENT OF BELFAY ENGINEERING IS PROHIBITED.

ENGINEERED FOR:

qualityelectric
5144 W. WASHINGTON ST. DENVER, CO
T-303-825-2221

ENGINEERING BY:

BELFAY ENGINEERING
MECHANICAL/ELECTRICAL ENGINEERING
2811 W. 31st AVENUE
DENVER, CO 80211
303 892-5980 FAX 892-5979

WATER TOWER LOFTS

2960 INCA STREET
DENVER, COLORADO

JOB# 00208
FILE 00208E17B
ENGINEERED BY ABM

E17

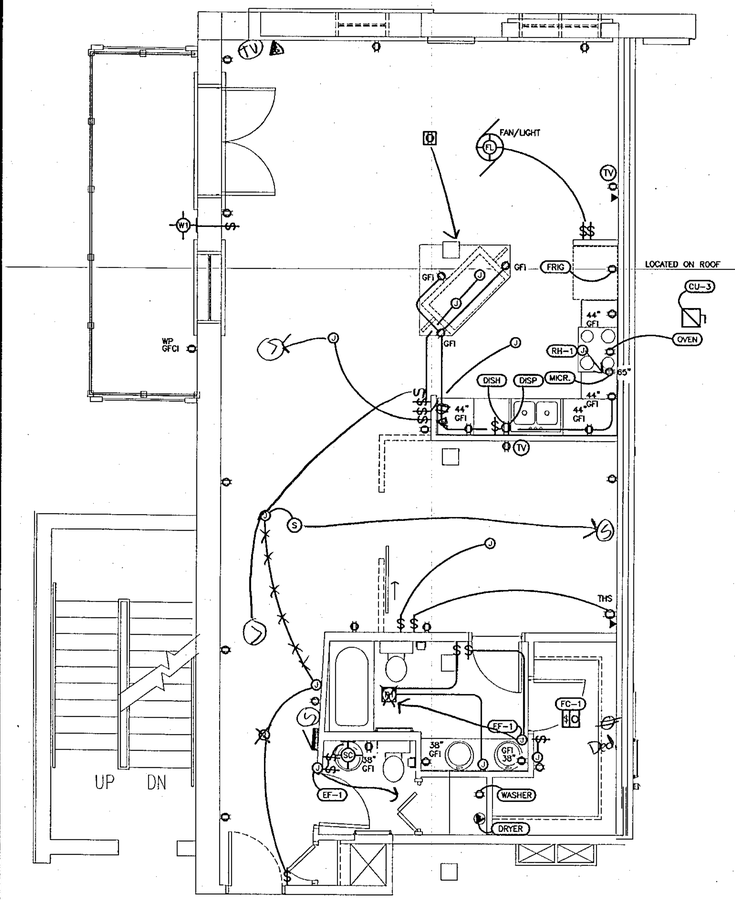

NORTH

TYPICAL UNIT G PLAN

SCALE 1/4" = 1'-0"

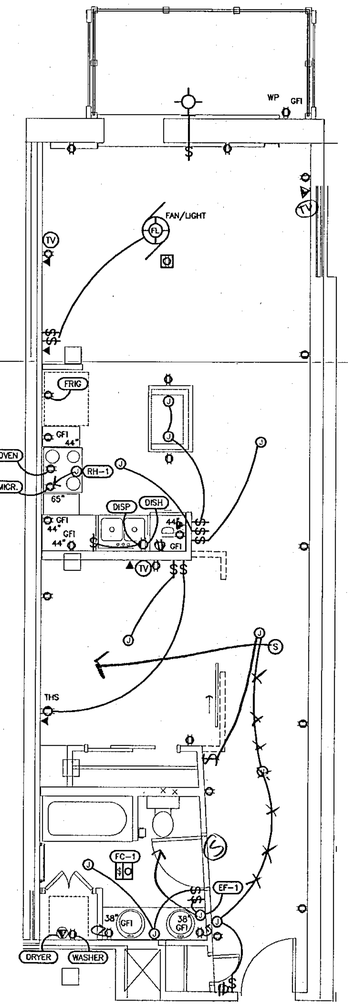

NORTH

TYPICAL UNIT H PLAN

SCALE 1/4" = 1'-0"

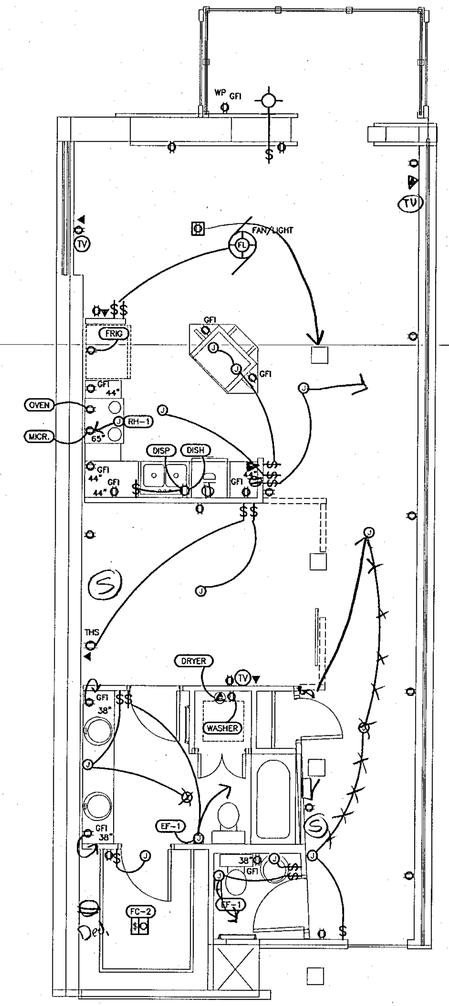

NORTH

TYPICAL UNIT J PLAN

SCALE 1/4" = 1'-0"

	ISSUE	DATE
	PERMIT	12/1/00
	REVISION	1/19/01
	CONSTRUCTION	3/2/01
2	REVISION	4/17/01
	RFC	4/23/01

© COPYRIGHT 2000
THIS DOCUMENT INCLUSIVE OF THE IDEAS INCORPORATED HEREIN IS THE PROPERTY OF BELFAY ENGINEERING. ANY USE OF THIS DOCUMENT OR IDEAS WITHOUT THE WRITTEN CONSENT OF BELFAY ENGINEERING IS PROHIBITED.

ENGINEERED FOR:
qualityElectric
6124 WASHINGTON ST. DENVER, CO
1-303-295-2221

ENGINEERING BY:
BELFAY ENGINEERING
MECHANICAL/ELECTRICAL ENGINEERING
2811 W. 35TH AVENUE
DENVER, CO 80204
303 832-5980 FAX 832-5979

WATER TOWER LOFTS

2960 INCA STREET
DENVER, COLORADO

JOB# 00208
FILE 00208E18B
ENGINEERED BY ABM

E18

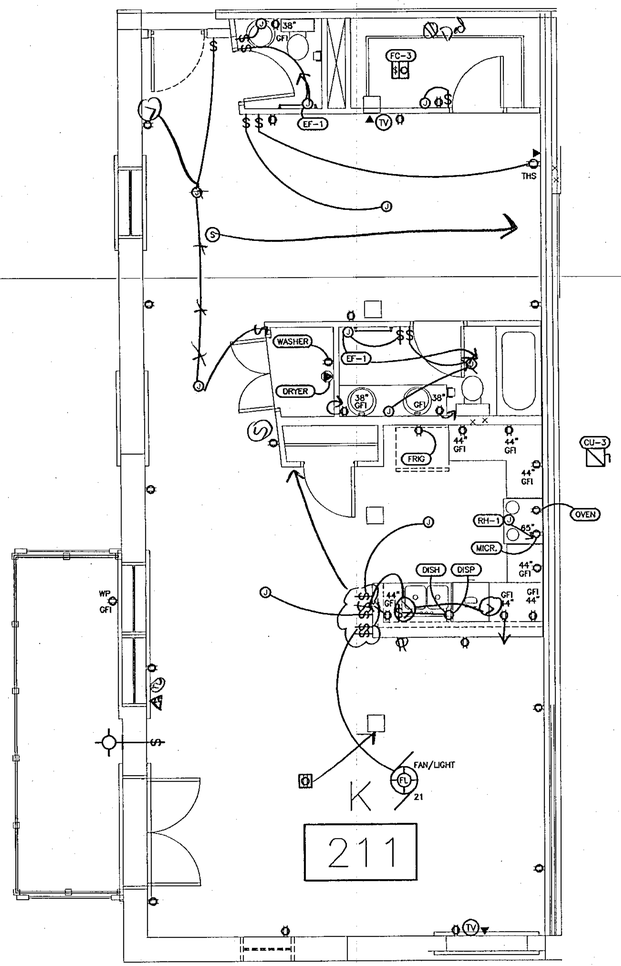

NORTH

TYPICAL UNIT K PLAN

SCALE 1/4" = 1'-0"

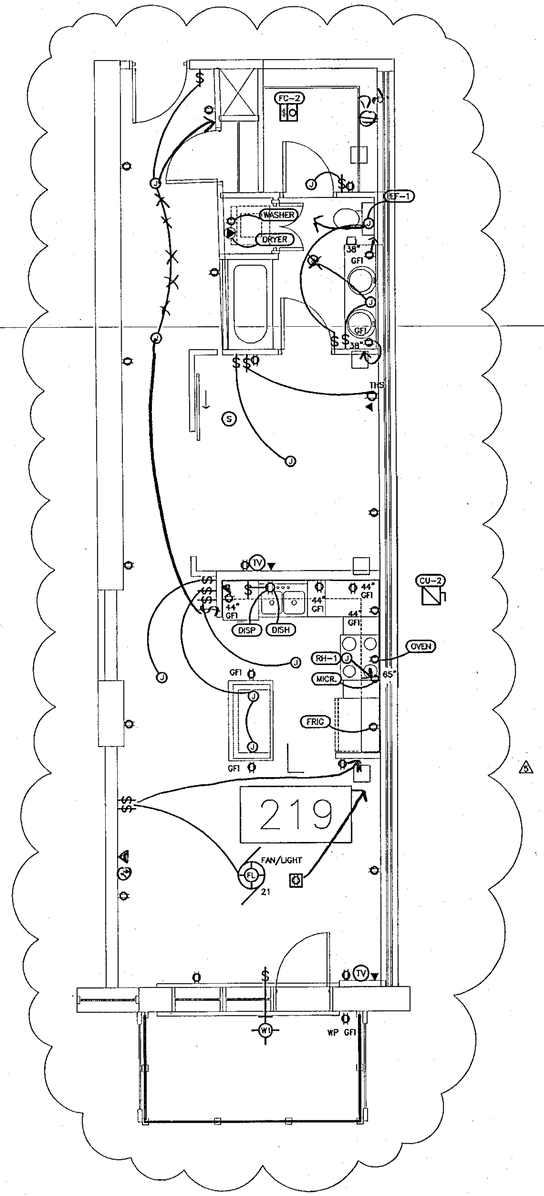

NORTH

TYPICAL UNIT L PLAN

SCALE 1/4" = 1'-0"

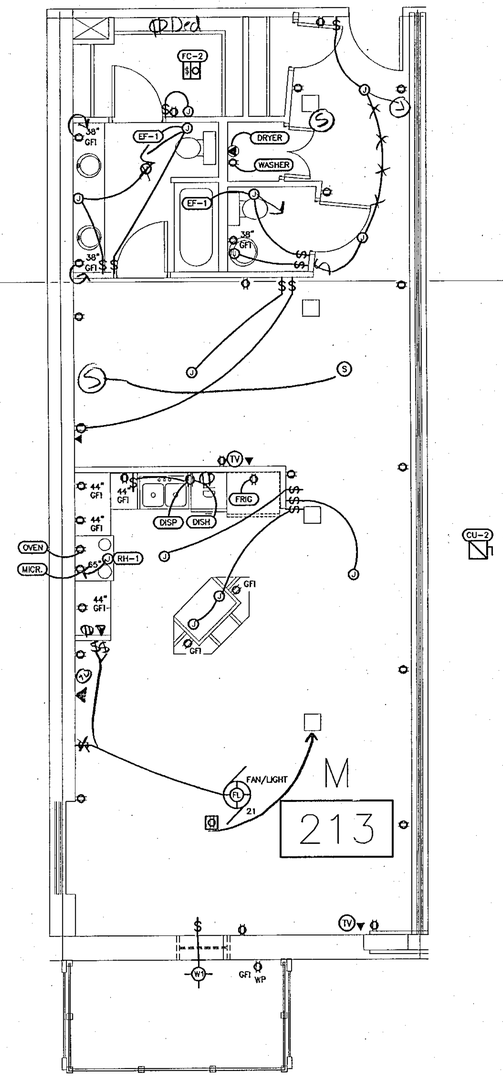

NORTH

TYPICAL UNIT M PLAN

SCALE 1/4" = 1'-0"

	ISSUE	DATE
	PERMIT	12/1/00
	REVISION	1/19/01
5	REVISION	4/17/01
	RFC	4/23/01

© COPYRIGHT 2000
THIS DOCUMENT INCLUSIVE OF THE IDEAS INCORPORATED HEREIN IS THE PROPERTY OF BELFAY ENGINEERING. ANY USE OF THIS DOCUMENT OR IDEAS WITHOUT THE WRITTEN CONSENT OF BELFAY ENGINEERING IS PROHIBITED.

ENGINEERED FOR:

qualityelectric
6124 WASHINGTON ST. DENVER, CO
1-800-286-2221

ENGINEERING BY:

BELFAY ENGINEERING
MECHANICAL/ELECTRICAL ENGINEERING
2811 W. 9TH AVENUE
DENVER, CO 80204
303 892-5980 FAX 892-5979

WATER TOWER LOFTS
2960 INCA STREET
DENVER, COLORADO

JOB# 00208
FILE 00208E19B
ENGINEERED BY ABM

E19

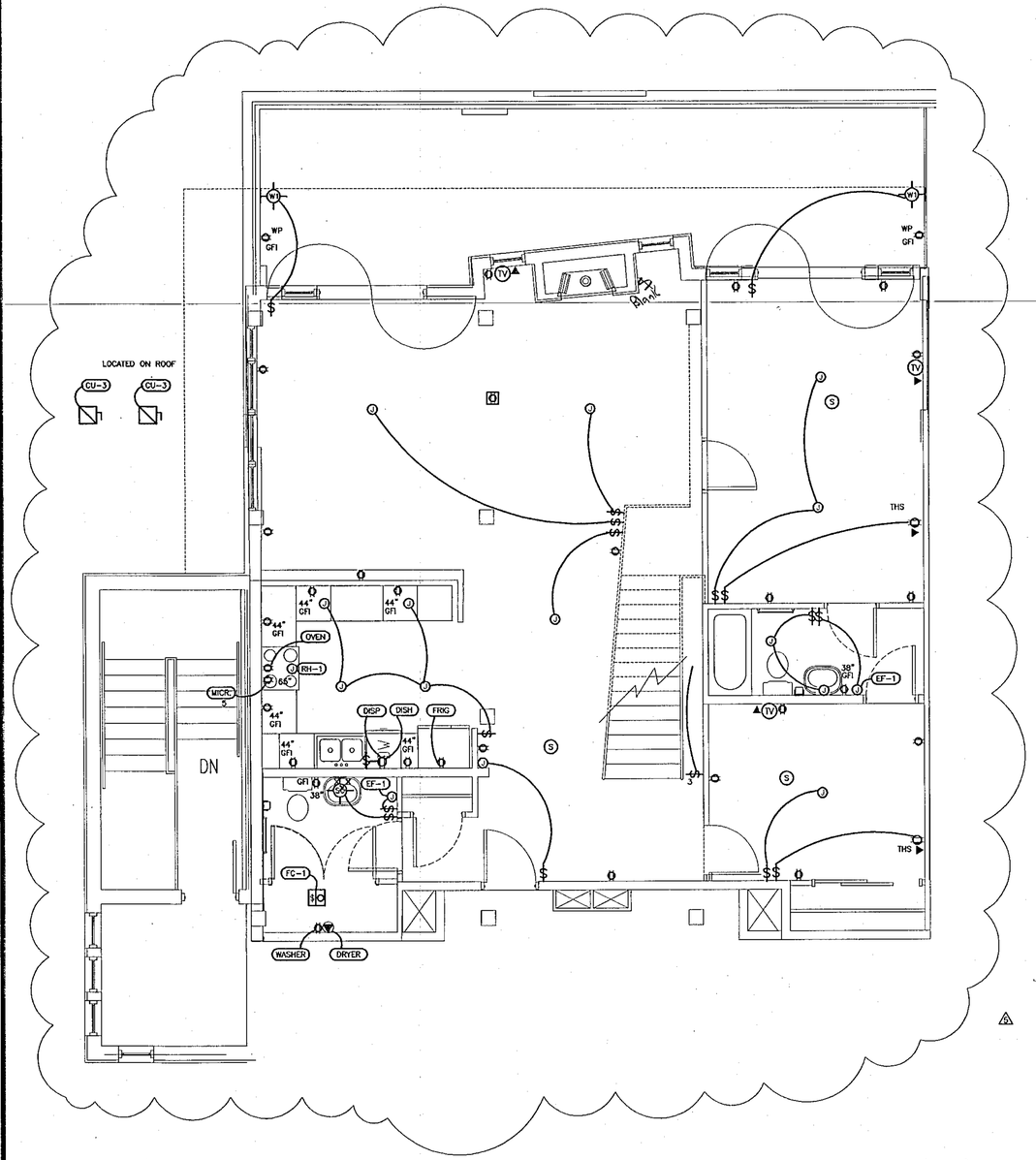

NORTH

UNIT 501 LOWER LEVEL ELECTRICAL PLAN (LARGEST UNIT)

SCALE 1/4" = 1'-0"

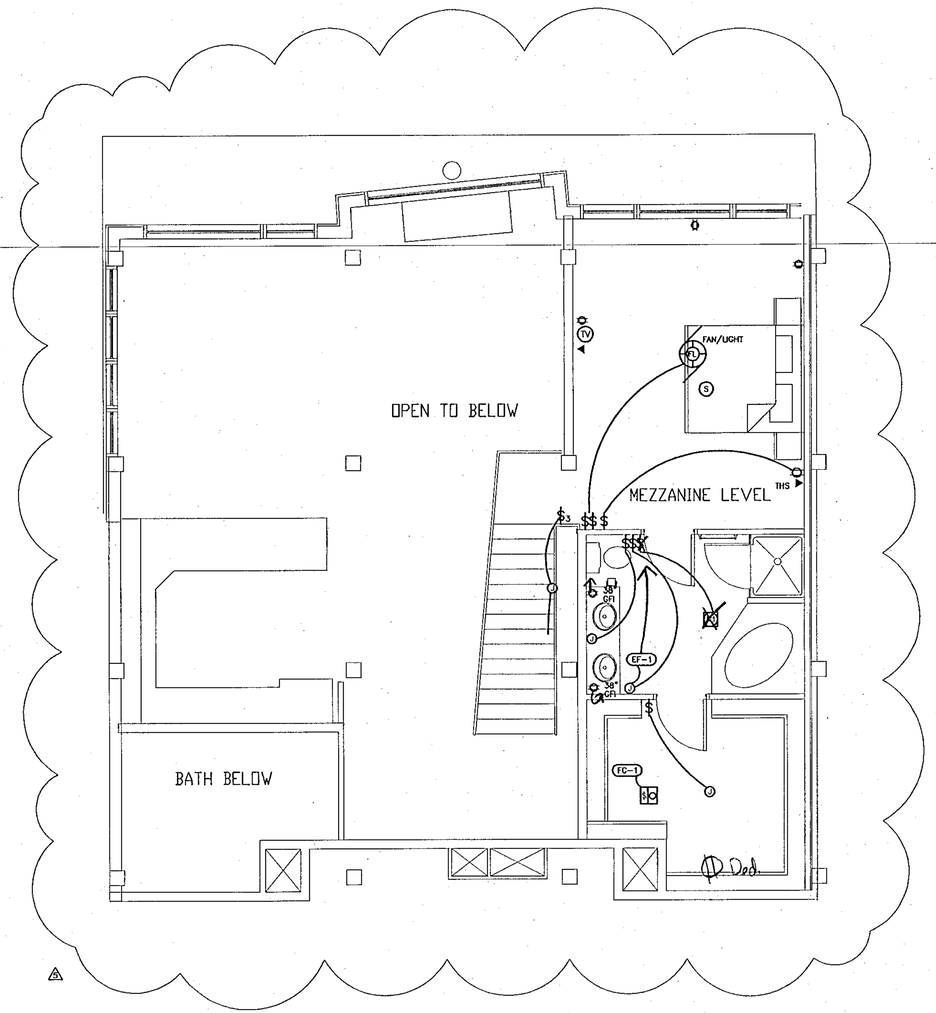

NORTH

UNIT 501 UPPER LEVEL ELECTRICAL PLAN (LARGEST UNIT)

SCALE 1/4" = 1'-0"

	ISSUE	DATE
	PERMIT	12/1/00
	REVISION	1/19/01
2	REVISION	4/17/01
	RFC	4/23/01

© COPYRIGHT 2000
THIS DOCUMENT INCLUSIVE OF THE IDEAS INCORPORATED HEREIN IS THE PROPERTY OF BELFAY ENGINEERING. ANY USE OF THIS DOCUMENT OR IDEAS WITHOUT THE WRITTEN CONSENT OF BELFAY ENGINEERING IS PROHIBITED.

ENGINEERED FOR:
qualityelectric
5124 WASHINGTON ST. DENVER, CO
1-303-295-2221

ENGINEERING BY:
BELFAY ENGINEERING
MECHANICAL/ELECTRICAL ENGINEERING
2851 W. 38TH AVENUE
DENVER, CO 80204
303 892-5980 FAX 892-5979

WATER TOWER LOFTS
2960 INCA STREET
DENVER, COLORADO

JOB# 00208
FILE 00208E20B
ENGINEERED BY ABM

E20

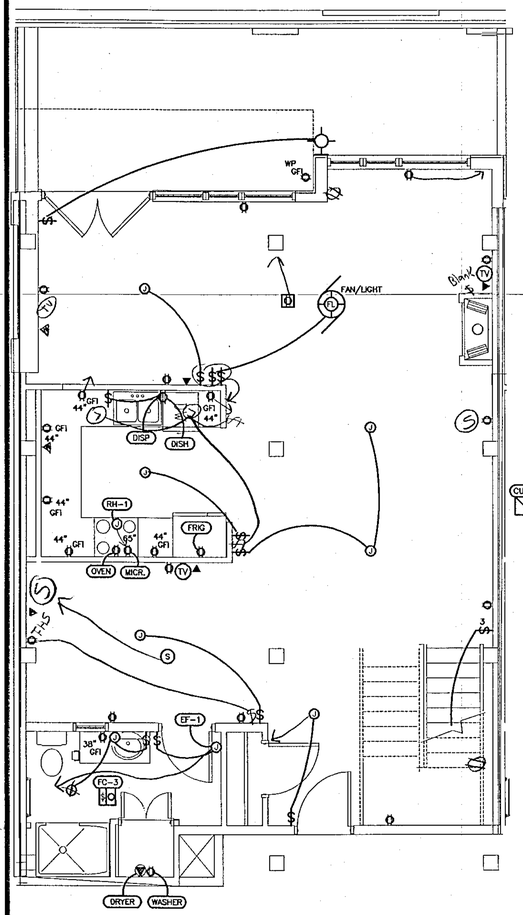

NORTH

TYPICAL UNIT 502 LOWER LEVEL

SCALE 1/4" = 1'-0"

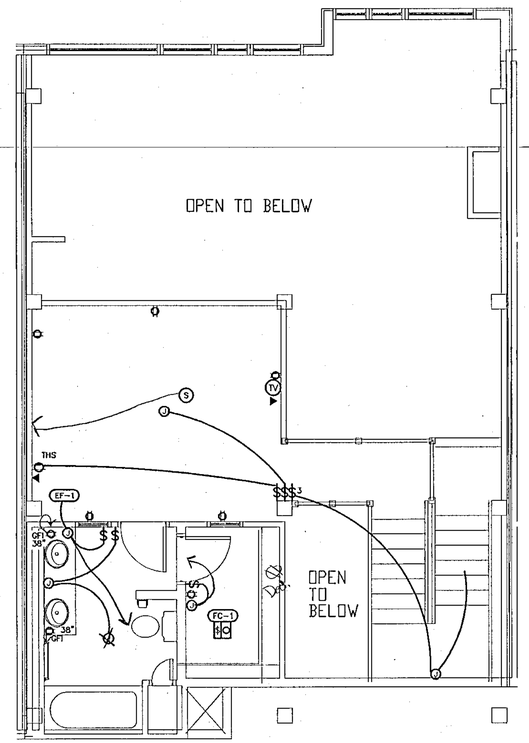

NORTH

TYPICAL UNIT 502 UPPER LEVEL

SCALE 1/4" = 1'-0"

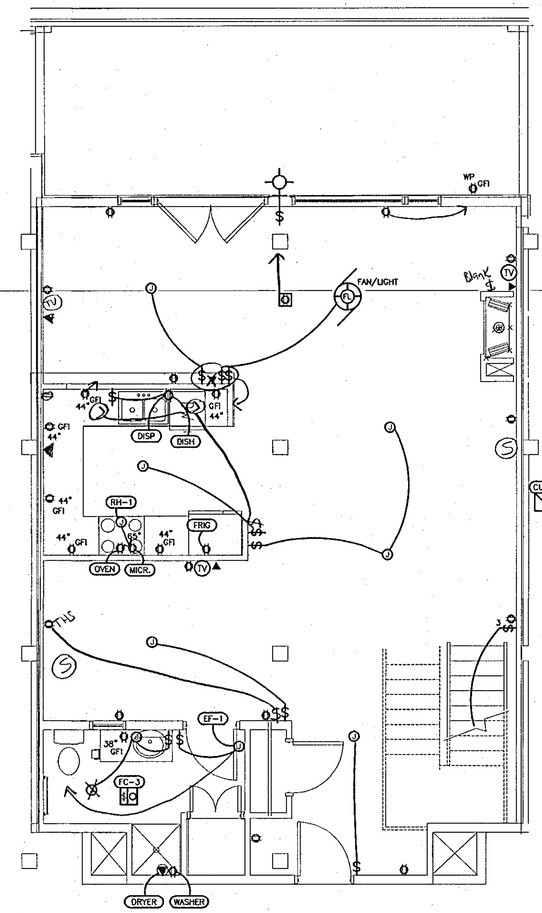

NORTH

TYPICAL UNIT 503 LOWER LEVEL

SCALE 1/4" = 1'-0"

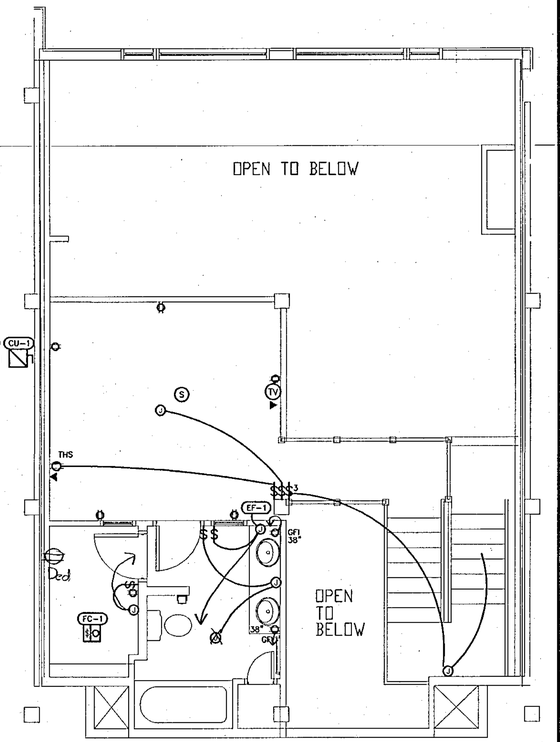

NORTH

TYPICAL UNIT 503 UPPER LEVEL

SCALE 1/4" = 1'-0"

ISSUE	DATE
PERMIT	12/1/00
REVISION	1/19/01
RFC	4/23/01

© COPYRIGHT 2000
THIS DOCUMENT INCLUSIVE OF THE IDEAS INCORPORATED HEREIN IS THE PROPERTY OF BELFAY ENGINEERING. ANY USE OF THIS DOCUMENT OR IDEAS WITHOUT THE WRITTEN CONSENT OF BELFAY ENGINEERING IS PROHIBITED.

ENGINEERED FOR:
quality Electric
614 WASHINGTON ST. DENVER, CO
1-303-282-2221

ENGINEERING BY:
BELFAY ENGINEERING
MECHANICAL/ELECTRICAL ENGINEERING
2811 W. 9TH AVENUE
DENVER, CO 80204
303 892-5980 FAX 892-5979

WATER TOWER LOFTS

2960 INCA STREET
DENVER, COLORADO

JOB# 00208
FILE 00208E21
ENGINEERED BY ABM

E21

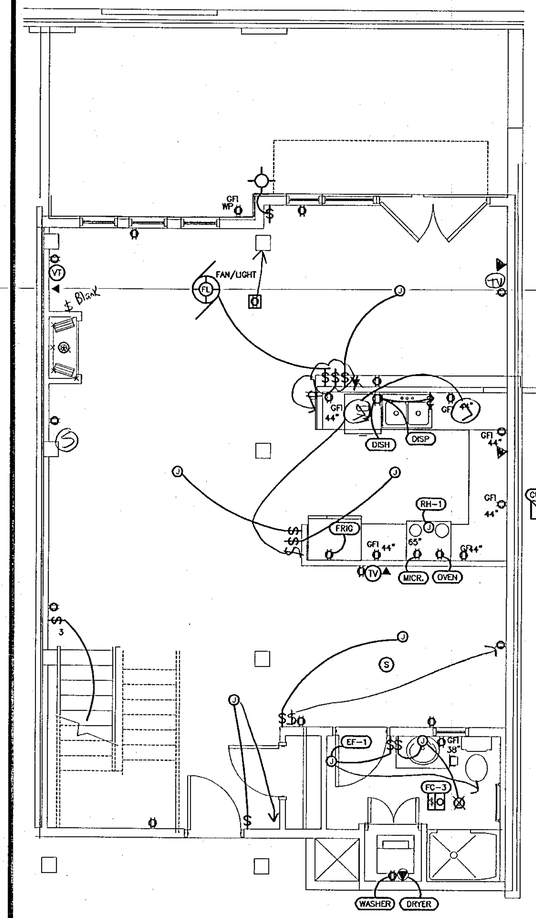

NORTH

TYPICAL UNIT 504 LOWER LEVEL

SCALE 1/4" = 1'-0"

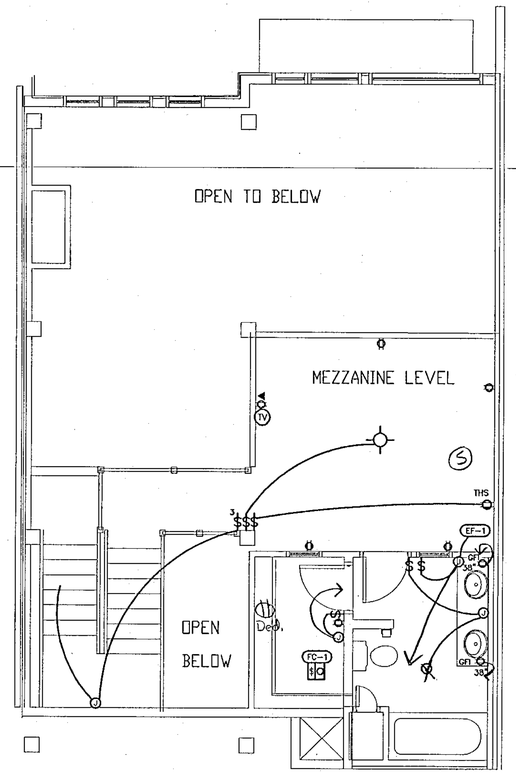

NORTH

TYPICAL UNIT 504 UPPER LEVEL

SCALE 1/4" = 1'-0"

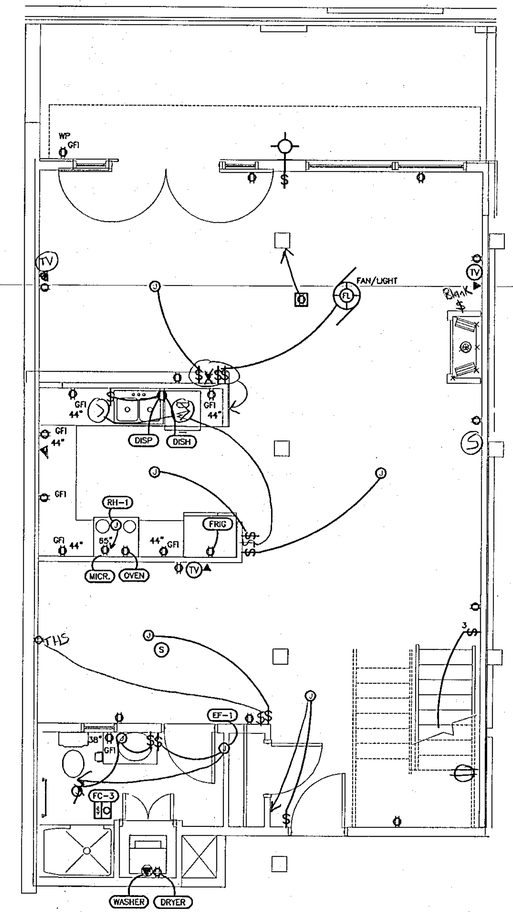

NORTH

TYPICAL UNIT 505 LOWER LEVEL

SCALE 1/4" = 1'-0"

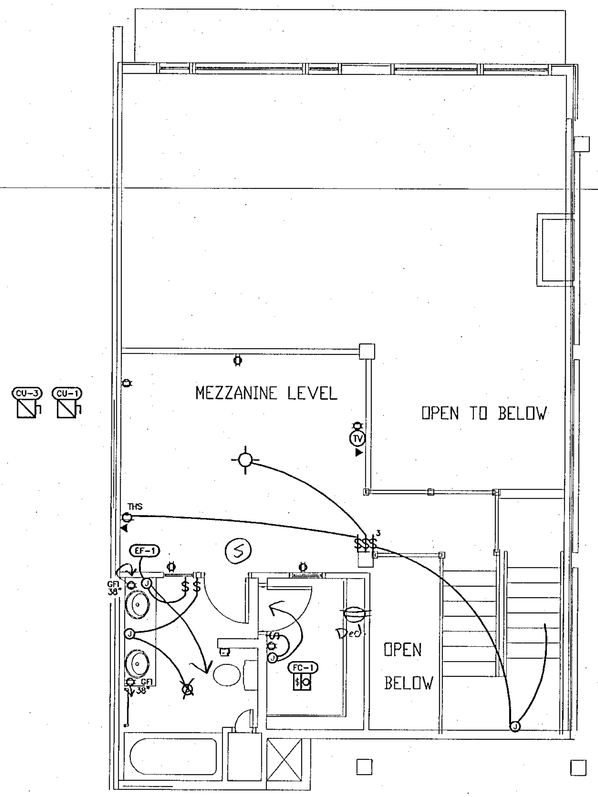

NORTH

TYPICAL UNIT 505 UPPER LEVEL

SCALE 1/4" = 1'-0"

	ISSUE	DATE
	PERMIT	12/1/00
	REVISION	1/19/01
	RFC	4/23/01

© COPYRIGHT 2000
THIS DOCUMENT INCLUSIVE OF THE IDEAS INCORPORATED HEREIN IS THE PROPERTY OF BELFAY ENGINEERING. ANY USE OF THIS DOCUMENT OR IDEAS WITHOUT THE WRITTEN CONSENT OF BELFAY ENGINEERING IS PROHIBITED.

ENGINEERED FOR:

Hally Electric
5124 WASHINGTON ST. DENVER, CO
1-800-288-2261

ENGINEERING BY:

BELFAY ENGINEERING
MECHANICAL/ELECTRICAL ENGINEERING
2811 W. 9TH AVENUE
DENVER, CO 80204
303 892-0980 FAX 892-5979

WATER TOWER LOFTS

2960 INCA STREET
DENVER, COLORADO

JOB# 00208
FILE 00208E22
ENGINEERED BY ABM

E22

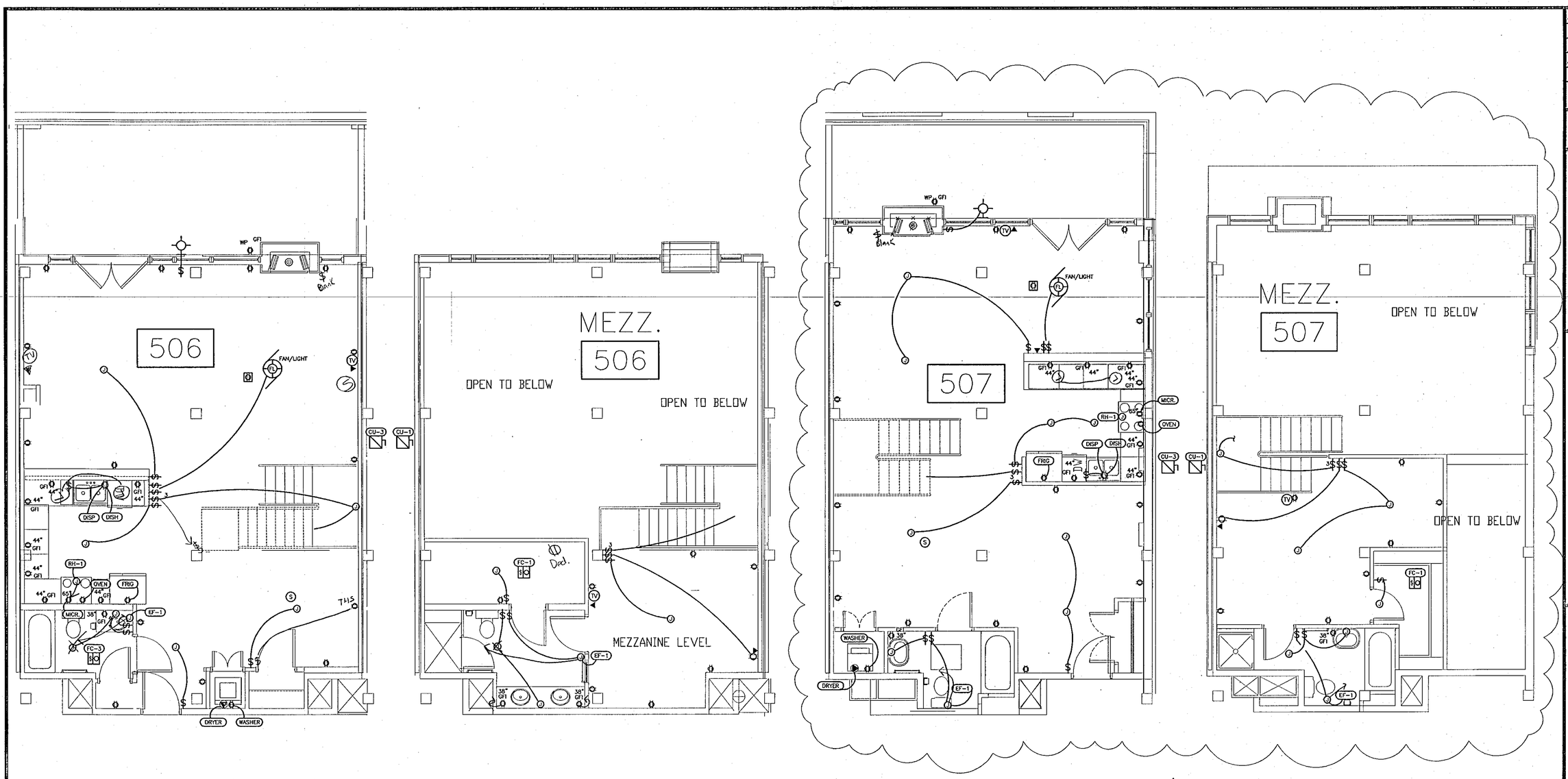

NORTH

TYPICAL UNIT 506 LOWER LEVEL

SCALE 1/4" = 1'-0"

NORTH

TYPICAL UNIT 506 UPPER LEVEL

SCALE 1/4" = 1'-0"

NORTH

TYPICAL UNIT 507 LOWER LEVEL

SCALE 1/4" = 1'-0"

NORTH

TYPICAL UNIT 507 UPPER LEVEL

SCALE 1/4" = 1'-0"

	ISSUE	DATE
	PERMIT	12/1/00
	REVISION	1/19/01
3	REVISION	4/17/01
	RFC	4/23/01

© COPYRIGHT 2000
THIS DOCUMENT, INCLUDING OF THE IDEAS AND DESIGNS CONTAINED HEREIN, AS THE PROPERTY OF BELFAY ENGINEERING. ANY USE OF THIS DOCUMENT OR IDEAS WITHOUT THE WRITTEN CONSENT OF BELFAY ENGINEERING IS PROHIBITED.

ENGINEERED FOR:

Quality Electric
6184 WASHINGTON ST. DENVER, CO
1-303-295-2221

ENGINEERING BY:

BELFAY ENGINEERING
MECHANICAL/ELECTRICAL ENGINEERING
2811 W. 9TH AVENUE
DENVER, CO 80204
303 892-5980 FAX 892-5979

WATER TOWER LOFTS

2960 INCA STREET
DENVER, COLORADO

JOB# 00208
FILE 00208E23B
ENGINEERED BY ABM

E23

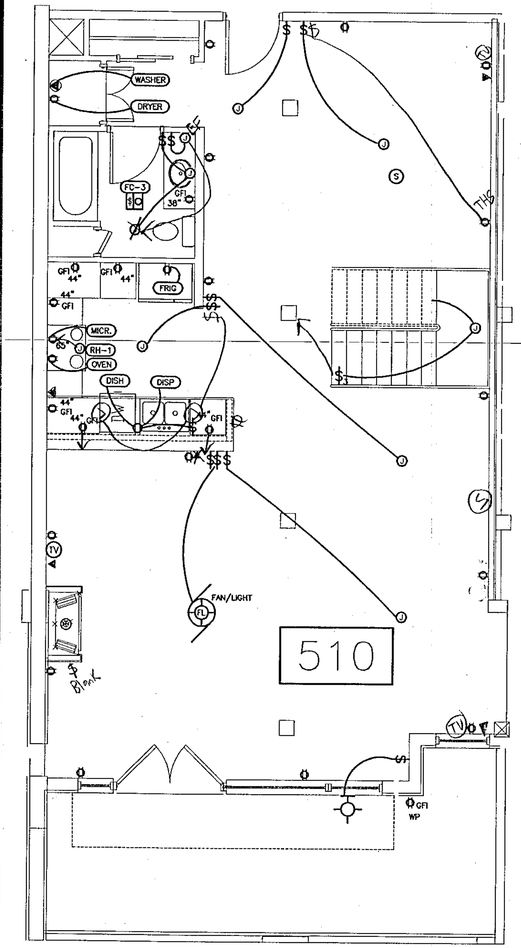

NORTH

TYPICAL UNIT 510 LOWER LEVEL

SCALE 1/4" = 1'-0"

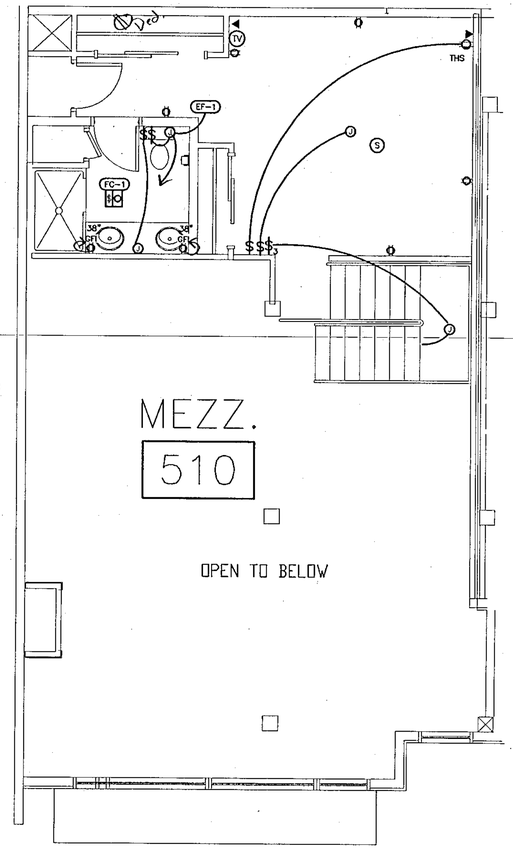

NORTH

TYPICAL UNIT 510 UPPER LEVEL

SCALE 1/4" = 1'-0"

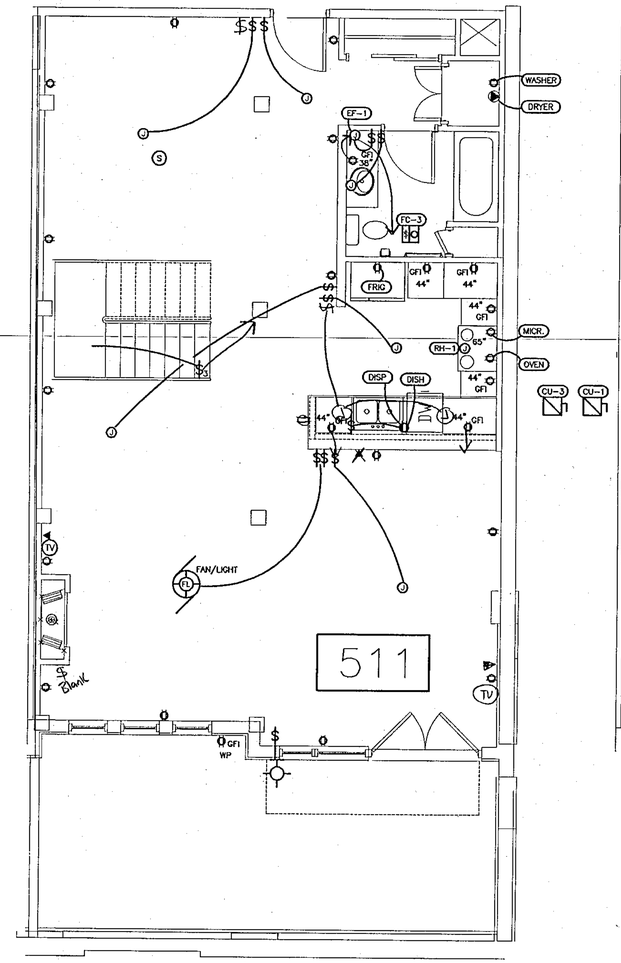

NORTH

TYPICAL UNIT 511 LOWER LEVEL

SCALE 1/4" = 1'-0"

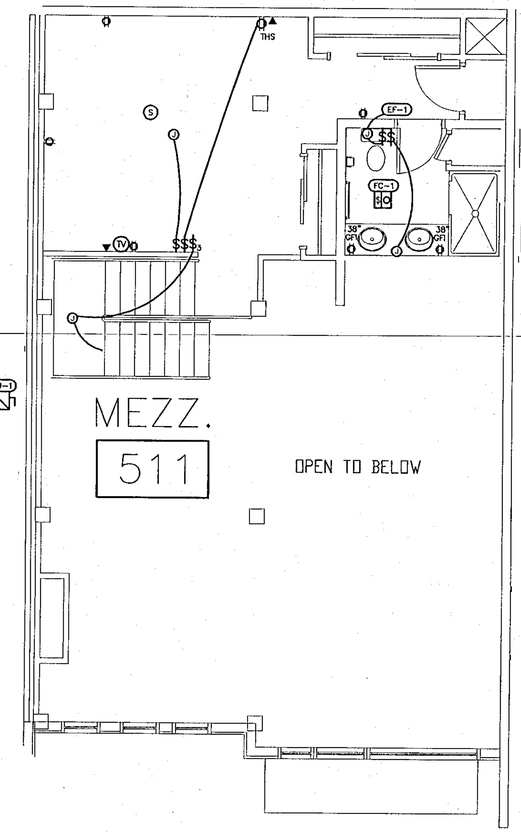

NORTH

TYPICAL UNIT 511 UPPER LEVEL

SCALE 1/4" = 1'-0"

⚠	ISSUE	DATE
	PERMIT	12/1/00
	REVISION	1/19/01
1	REVISION	4/17/01
	RFC	4/23/01

© COPYRIGHT 2000
THIS DOCUMENT INCLUSIVE OF THE IDEAS INCORPORATED HEREIN IS THE PROPERTY OF BELFAY ENGINEERING. ANY USE OF THIS DOCUMENT OR IDEAS WITHOUT THE WRITTEN CONSENT OF BELFAY ENGINEERING IS PROHIBITED.

ENGINEERED FOR:

Quality Electric
5124 WASHINGTON ST. DENVER, CO
1-303-295-2221

ENGINEERING BY:

BELFAY ENGINEERING
MECHANICAL/ELECTRICAL ENGINEERING
2811 W. 9TH AVENUE
DENVER, CO 80204
303 892-5980 FAX 892-5979

WATER TOWER LOFTS

2960 INCA STREET
DENVER, COLORADO

JOB# 00208
FILE 00208E25B
ENGINEERED BY ABM

E25

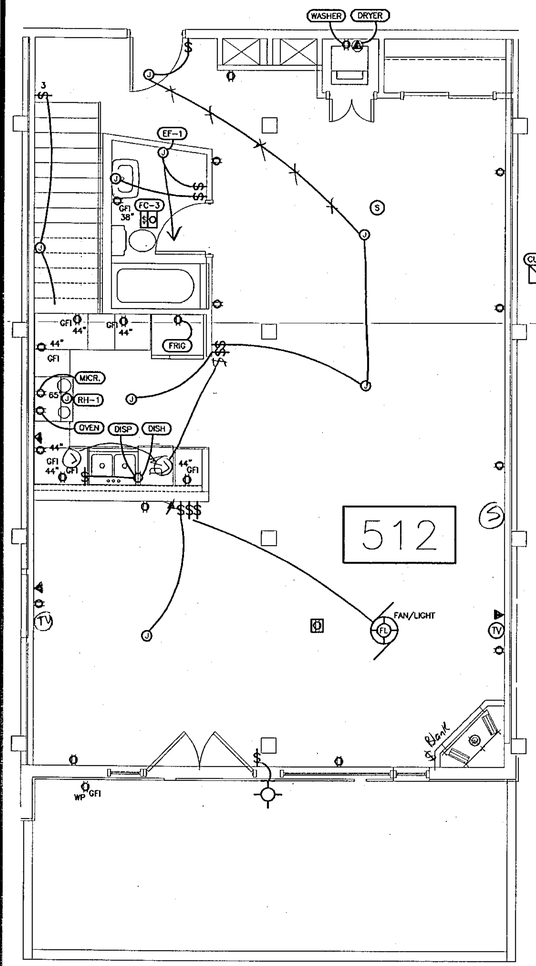

NORTH

TYPICAL UNIT 512 LOWER LEVEL

SCALE 1/4" = 1'-0"

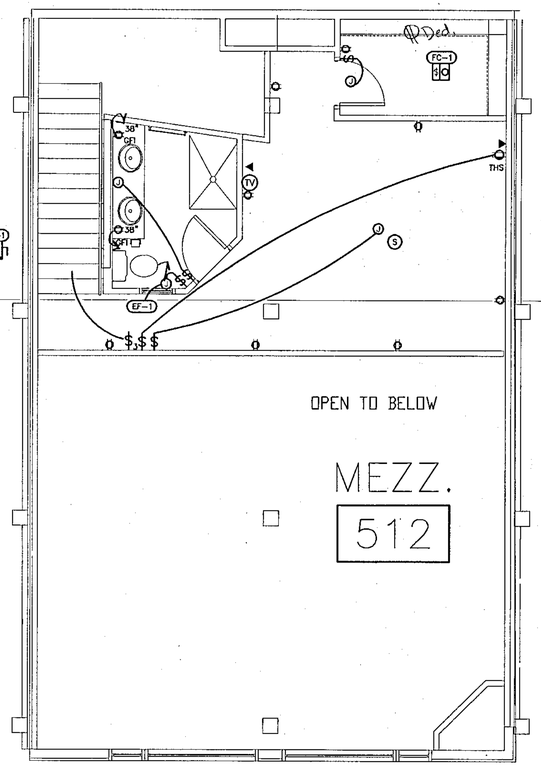

NORTH

TYPICAL UNIT 512 UPPER LEVEL

SCALE 1/4" = 1'-0"

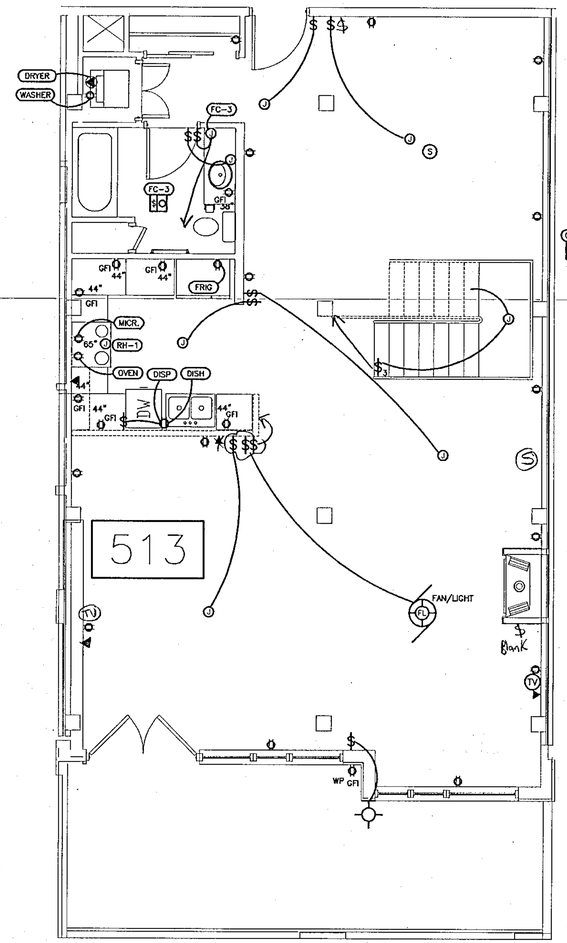

NORTH

TYPICAL UNIT 513 LOWER LEVEL

SCALE 1/4" = 1'-0"

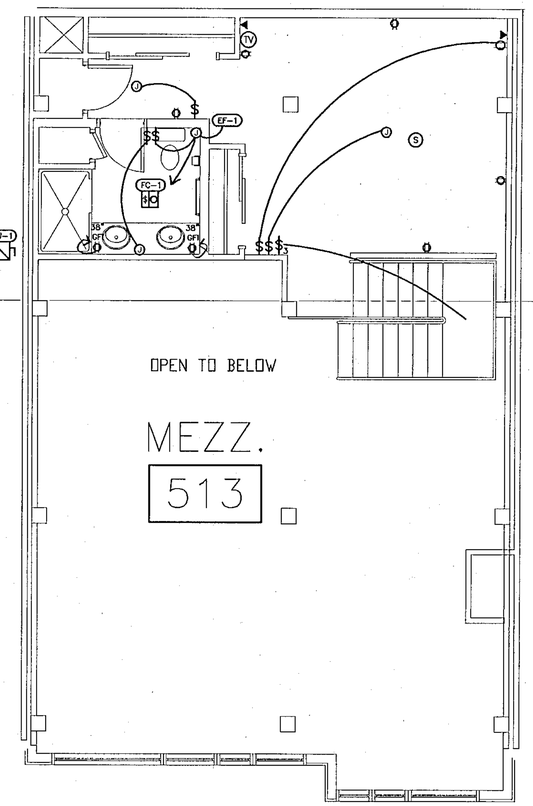

NORTH

TYPICAL UNIT 513 UPPER LEVEL

SCALE 1/4" = 1'-0"

ISSUE	DATE
PERMIT	12/1/00
REVISION	1/19/01
RFC	4/23/01

© COPYRIGHT 2000
THIS DOCUMENT, INCLUDING THE IDEAS AND DESIGNS INCORPORATED HEREIN, IS THE PROPERTY OF BELFAY ENGINEERING AND MAY NOT BE USED ON ANY OTHER DOCUMENT OR IDEAS WITHOUT THE WRITTEN CONSENT OF BELFAY ENGINEERING IS PROHIBITED.

ENGINEERED FOR:

Quality Electric
5124 WASHINGTON ST. DENVER, CO
T-303-295-2221

ENGINEERING BY:

BELFAY ENGINEERING
MECHANICAL/ELECTRICAL ENGINEERING
2811 W. 97th AVENUE
DENVER, CO 80204
303 892-5980 FAX 892-5979

WATER TOWER LOFTS

2960 INCA STREET
DENVER, COLORADO

JOB# 00208
FILE 00208E26
ENGINEERED BY ABM

E26

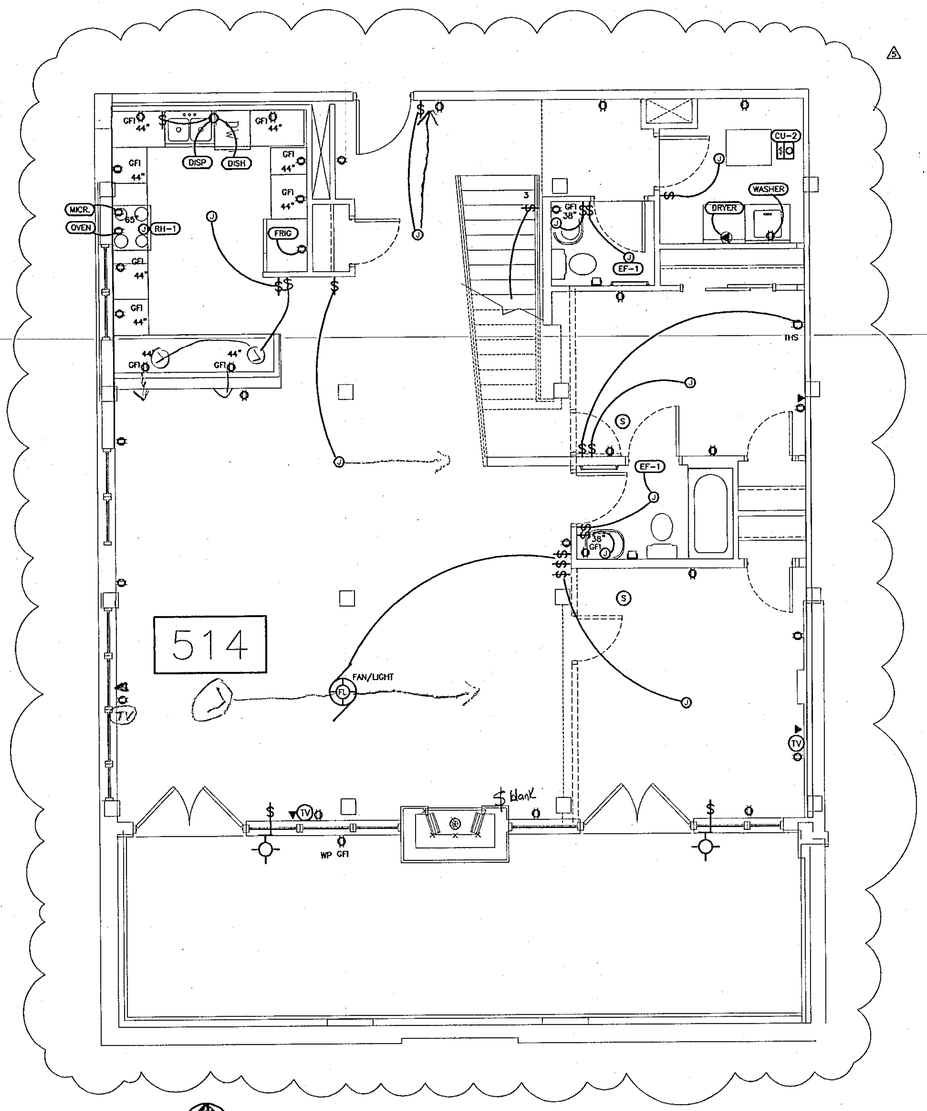

NORTH

TYPICAL UNIT 514 LOWER LEVEL

SCALE 1/4" = 1'-0"

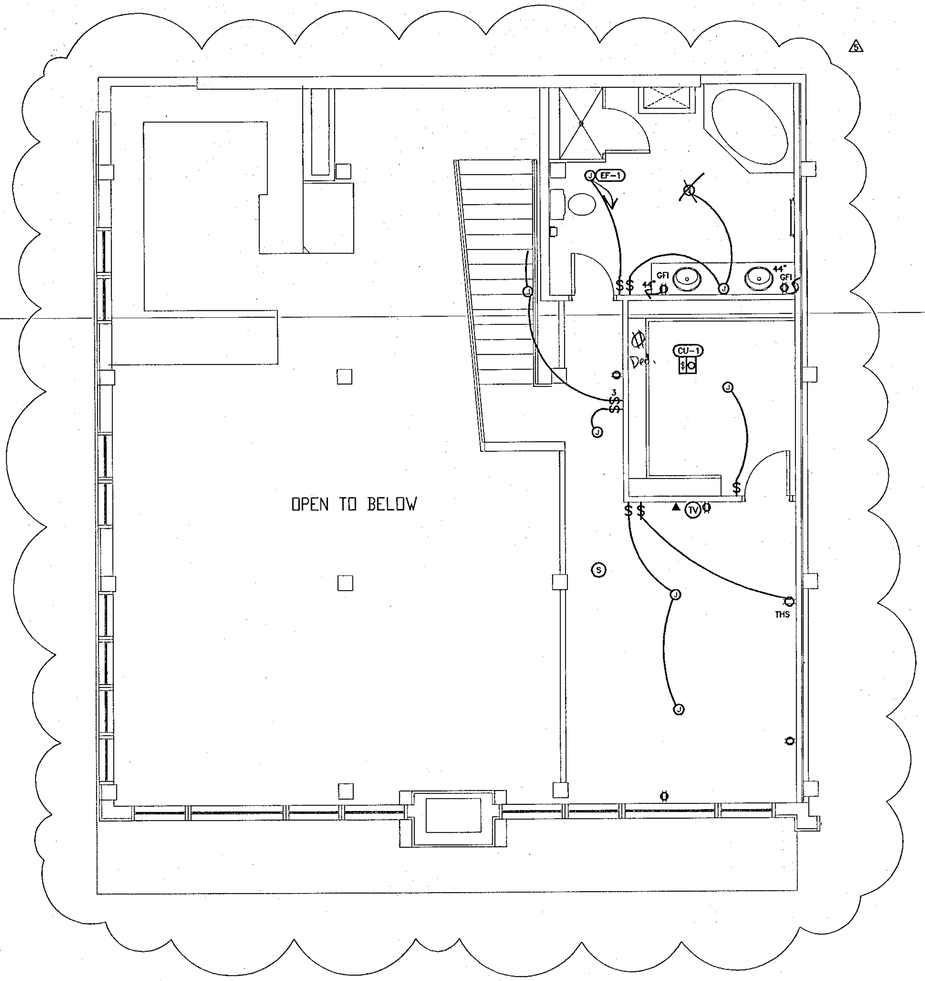

NORTH

TYPICAL UNIT 514 UPPER LEVEL

SCALE 1/4" = 1'-0"

	ISSUE	DATE
	PERMIT	12/1/00
	REVISION	1/19/01
2	REVISION	4/17/01
	RFC	4/23/01

© COPYRIGHT 2000
THIS DOCUMENT INCLUSIVE OF THE IDEAS INCORPORATED HEREIN IS THE PROPERTY OF BELFAY ENGINEERING. ANY USE OF THIS DOCUMENT OR IDEAS WITHOUT THE WRITTEN CONSENT OF BELFAY ENGINEERING IS PROHIBITED.

ENGINEERED FOR:

Electric co

ENGINEERING BY:

BELFAY ENGINEERING
MECHANICAL/ELECTRICAL ENGINEERING
2811 W. 9TH AVENUE
DENVER, CO 80204
303 892-5980 FAX 892-5979

WATER TOWER LOFTS

2960 INCA STREET
DENVER, COLORADO

JOB# 00208
FILE 00208E27B
ENGINEERED BY ABM

E27