A REPORT

ON

Design and Development of Boost Converter Based Solar Battery Charger

BY

Names of the Students	ID.No.s
Achyut Khandelwal	2022A8PS1331H
Garv Agarwal	2022A8PS1307H

AT

CSIR-CEERI JAIPUR

A Practice School-I Station
of

BIRLA INSTITUTE OF TECHNOLOGY & SCIENCE, PILANI

(June, 2024)

A
REPORT
ON
Design and Development of Boost Converter Based Solar Battery Charger

BY

Names of the Students	ID.No.s	Discipline
Achyut Khandelwal	2022A8PS1331H	B.E. Electronics and Instrumentation
Garv Agarwal	2022A8PS1307H	B.E. Electronics and Instrumentation

Prepared in partial fulfillment of the
Practice School-I Course Nos.
BITS C221/BITS C231/BITS C241
AT
CSIR-CEERI JAIPUR

A Practice School-I Station
of

BIRLA INSTITUTE OF TECHNOLOGY & SCIENCE, PILANI

(June, 2024)

ACKNOWLEDGEMENTS

We would like to express our deepest gratitude to the individuals and institutions acknowledged below for the invaluable guidance, continuous support, and constructive feedback throughout the first month of the project.

We express our heartfelt gratitude to Prof. V. Ram Gopal Rao (Vice Chancellor), Prof. Annapoorna Gopal (Dean PSD), Prof. Sandeep Deshmukh (Associate Dean PSD), Dr. G. Muthukumar (Associate Dean PSD), Prof. Trilok Mathur (Faculty In-charge), Mr. Manmahendar Singh, Dr. PC Panchariya (Director, CSIR-CEERI), Mr. Sai Krishna V. (Principal Scientist, InCharge CSIR-CEERI Jaipur) and Dr. Sachin Devassy (Principal Scientist, CSIR-CEERI Jaipur) for their expertise, encouragement and unwavering availability throughout this journey. Their assistance, insights and extensive experience helped in the progress of the project. We extend our deepest thanks to BITS Pilani and CSIR-CEERI,Jaipur for providing us such a great opportunity to undergo industrial training in one of India’s premiere organization specializing in the field of electronics engineering.

Lastly, we are thankful to all those who have directly or indirectly contributed to this project. Your support has been invaluable and we are sincerely thankful for your help.

BIRLA INSTITUTE OF TECHNOLOGY AND SCIENCE
PILANI (RAJASTHAN)
Practice School Division

Station: CSIR-CEERI **Centre:** JAIPUR

Duration: 2 Months **Date of Start:** 28 May 2024

Date of Submission: 29 June 2024

Title of the Project: Design and Development of Boost Converter Based Solar Battery Inverter

Names/ID.no.s/ Discipline:

1. Achyut Khandelwal– 2022A8PS1331H– Electronics & Instrumentation
2. Garv Agarwal– 2022A8PS1307H– Electronics & Instrumentation

Name and Designation of Expert: Dr. Sachin Devassy (Principal Scientist)

Name of the Faculty: Dr. Trilok Mathur

Key Words: Current sensing, Voltage follower circuit, PCB Design, Gate Drivers

Project Area: Power Electronics, Boost Converter Parameters, Device Selection, Open Loop Boost Converter Simulation, TI Microcontroller Study, Component Mounting and Soldering.

Abstract: This project focuses on designing and developing a boost converter-based solar charge controller aimed at enhancing the efficiency of battery charging in solar power systems. The primary goal is to convert and regulate the variable output from a solar panel efficiently, ensuring safe battery charging. The system utilizes a Texas Instruments LaunchXL-F28027F microcontroller to implement Pulse Width Modulation (PWM) techniques for precise control of MOSFET switching. This enables optimal management of the power conversion process, optimizing battery charging in solar energy applications. The project encompasses circuit design, PWM signal generation, ADC sensing for voltage stability, and PCB layout using DipTrace for precise assembly.

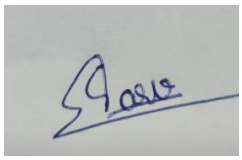
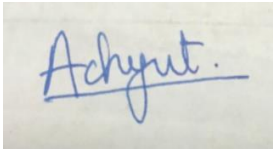

Signatures of Students

Date: 29 June 2024

Signature of PS Faculty

Date: 29 June 2024

TABLE OF CONTENTS

TOPICS	PAGE NO.
1. Introduction	6
2. Overview of Boost Converter	7-8
3. Calculations	8-9
4. Circuit Design	9-10
5. Generation of ePWM signals	10
6. ADC Sensing	11
7. Voltage Follower OP-AMP Circuit	11-12
8. DipTrace	12-15
9. PCB Layout	15-16
10. References	17
11. Glossary	18

INTRODUCTION

This report primarily focuses on the design and development of a boost converter, a DC-DC type converter that steps up the input voltage to a higher output voltage. The boost converter is widely used in numerous applications, such as renewable energy systems, electric vehicles, portable electronic devices, and industrial power supplies, due to its ability to provide a stable and higher output voltage from a lower input voltage source.

The objective of this project is to design a boost converter that can efficiently convert a low input voltage to high output voltage with minimal losses. The design process involves selecting appropriate components, such as the inductor, capacitor, switch and diode to achieve the desired voltage conversion ratio and efficiency. Additionally, the development phase includes the implementation of a control strategy to regulate the output voltage and ensure stable operation under varying load conditions.

This report is organised in various sections. The first section gives an overview and theory behind the operation of boost converter. The subsequent sections refer to the calculations and circuit design of boost converter. Also, it includes the detailed use of microcontroller and drivers used for testing and sensing. For the PCB part, we used DipTrace for schematic capture and layout. The report concludes briefing the future work to be done in the project.

DETAILED REPORT

1. Overview of Boost Converter

A boost converter, also known as a step-up converter, is designed to increase (or "boost") the voltage from its input to its output. This is achieved by storing energy in an inductor and releasing it to the output at a higher voltage. The basic operation involves switching a transistor on and off at high frequency, which alternately charges the inductor and then releases the stored energy to the load through a diode. The result is a higher output voltage than the input voltage.

1.1 Main Components

- Inductor
- Capacitor
- Diode
- Switch (MOSFET)
- Load

1.2 Working Principle

The operation of a boost converter can be divided into two primary phases: the charging phase (when the switch is closed) and the discharging phase (when the switch is open).

- **Charging Phase (Switch Closed):**
    1. When the switch is closed, current flows from the input voltage source (V_in) through the inductor, and the inductor stores energy by building up a magnetic field.
    2. During this phase, the diode is reverse-biased, and the current flows only through the switch and inductor.
    3. The capacitor supplies the load with the necessary current, ensuring a continuous output voltage.
- **Discharging Phase (Switch Open):**
    1. When the switch is opened, the current path through the switch is broken.
    2. The inductor, which opposes the sudden change in current, releases its stored energy.
    3. The voltage across the inductor adds to the input voltage, resulting in a higher total voltage that forward-biases the diode.
    4. The combined voltage forces current through the diode to the output capacitor and the load, thereby increasing the output voltage.

1.3 Applications

- Battery-Powered Devices: To boost battery voltage to the required operating level of the device.
- Power Management: In systems where voltage regulation is critical, such as in solar power systems and electric vehicles.
- Communication Devices: In RF amplifiers and other circuits where higher voltage is needed from a lower supply voltage.

2. Calculations

CALCULATION OF BOOST CONVERTER

GIVEN INFORMATION-:

$V_{out} := 150\ V \quad P_{out} := 500\ W$

$V_{in} := 50\ V \quad f_{sw} := 50\ kHz$

$\eta := 0.8$

$$D := 1 - \frac{V_{in} \cdot \eta}{V_{out}}$$

D=duty cycle

$$D = 0.733$$

$$R_{out} := \frac{V_{out}^2}{P_{out}}$$

R_{load} =resistance of the load

$$R_{out} = 45\ \Omega$$

$$I_{out} := \sqrt{\frac{P_{out}}{R_{out}}}$$

I_{load} =current through of the load

$$I_{out} = 3.333\ A$$

$$P_{in} := \frac{P_{out}}{\eta}$$

$$P_{in} = 625\ W$$

$$I_{inductor} := \frac{P_{in}}{V_{in}}$$

$$I_{inductor} = 12.5\ A$$

TAKING ΔI_L EQUAL TO 20% OF I_{load}

$$\Delta I_L := 2.5$$

$$L := \frac{V_{in} \cdot D}{\Delta I_L \cdot f_{sw}}$$

$$L = 293.333\ A \cdot \mu H$$

TAKING ΔV_{out} EQUAL TO 2% OF V_{out}

$$\Delta V_{out} := 3$$

$$C_{out} := \frac{I_{out} \cdot D}{f_{sw} \cdot \Delta V_{out}}$$

$$C_{out} = 16.296\ V \cdot \mu F$$

$$D = 1 - \frac{vin}{vout} \times n = 1 - \frac{50}{150} \times 0.8 = 0.733$$

$$L = \frac{Vin \times D}{\Delta Il \times f} = \frac{50 \times 0.733}{2.5 \times 50000} = 293.333 \mu H$$

$$C = \frac{Iout \times D}{f \times \Delta Vout} = \frac{3.33 \times 0.733}{50000 \times 3} = 16.296 \mu F$$

3. Circuit Design

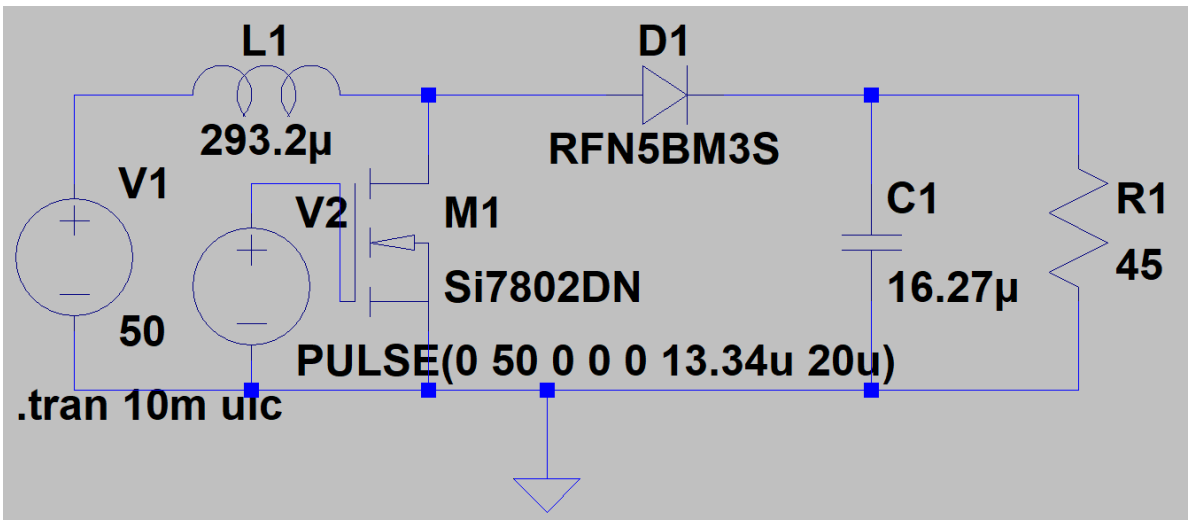

The above circuit was built and simulated in LTSpice. We checked the output and vary some values to get desired output. The MOSFET and Diode used here are mock, we will once verify that which MOSFETs and Diodes are available and will make the required changes. Also, the pulse generating voltage will be replaced by microcontroller producing ePWM signals.

4. Generation of PWM Signals

- Pulse Width Modulation (PWM) is a modulation technique in which the width of the pulses in a pulse train is varied in direct proportion to a modulating signal. Pulse Width Modulation (PWM) is a versatile and efficient technique for controlling power and encoding information in various applications. Its ability to precisely control the duty cycle of a pulsed signal makes it invaluable in motor control, power delivery, LED dimming, and many other applications.

- We are PWM signals for the switching of the MOSFET. We are using Texas Instruments' microcontroller (LaunchXL F28027F) for this purpose. We ran the pre-defined example of ControlSuite for PWM generation in CCStudio. The example produced the signal of 313.56Hz. We changed the TBPRD value in the code to 600 to get the required frequency of 50kHz. Also, the changing the other factors we got the required duty cycle too.
- There are three pins in the microcontroller which produces ePWM signals. We are using only one pin (pin1 of J6) in our circuit. Other two pins will be open.

Example_2802xEPwmDeadBand.c | Example_2802xAdcSoc.c

```c
void InitEPwm1Example()
{

   EPwm1Regs.TBPRD = 600;                          // Set timer period
   EPwm1Regs.TBPHS.half.TBPHS = 0x0000;             // Phase is 0
   EPwm1Regs.TBCTR = 0x0000;                        // Clear counter

   // Setup TBCLK
   EPwm1Regs.TBCTL.bit.CTRMODE = TB_COUNT_UPDOWN; // Count up
   EPwm1Regs.TBCTL.bit.PHSEN = TB_DISABLE;        // Disable phase loading
   EPwm1Regs.TBCTL.bit.HSPCLKDIV = TB_DIV1;       // Clock ratio to SYSCLKOUT
   EPwm1Regs.TBCTL.bit.CLKDIV = TB_DIV1;

   EPwm1Regs.CMPCTL.bit.SHDWAMODE = CC_SHADOW;    // Load registers every ZERO
   EPwm1Regs.CMPCTL.bit.SHDWBMODE = CC_SHADOW;
   EPwm1Regs.CMPCTL.bit.LOADAMODE = CC_CTR_ZERO;
```

5. ADC Sensing

- ADC (Analog-to-Digital Converter) sensing refers to the process of converting analog signals, which are continuous in nature, into digital signals, which are discrete and can be processed by digital systems. This conversion is essential for modern electronic devices to interpret and manipulate real-world analog inputs.

- We are again using the same LaunchXL-F28027F microcontroller for ADC sensing. We will give input and output voltages for ADC sensing and if it exceeds the limited value, we will vary the duty cycle of PWM to get the stabilized output voltage. We are using both ADCINA02 and ADCINA04 pin of microcontroller for this.

6. Voltage Follower OP-AMP Circuit

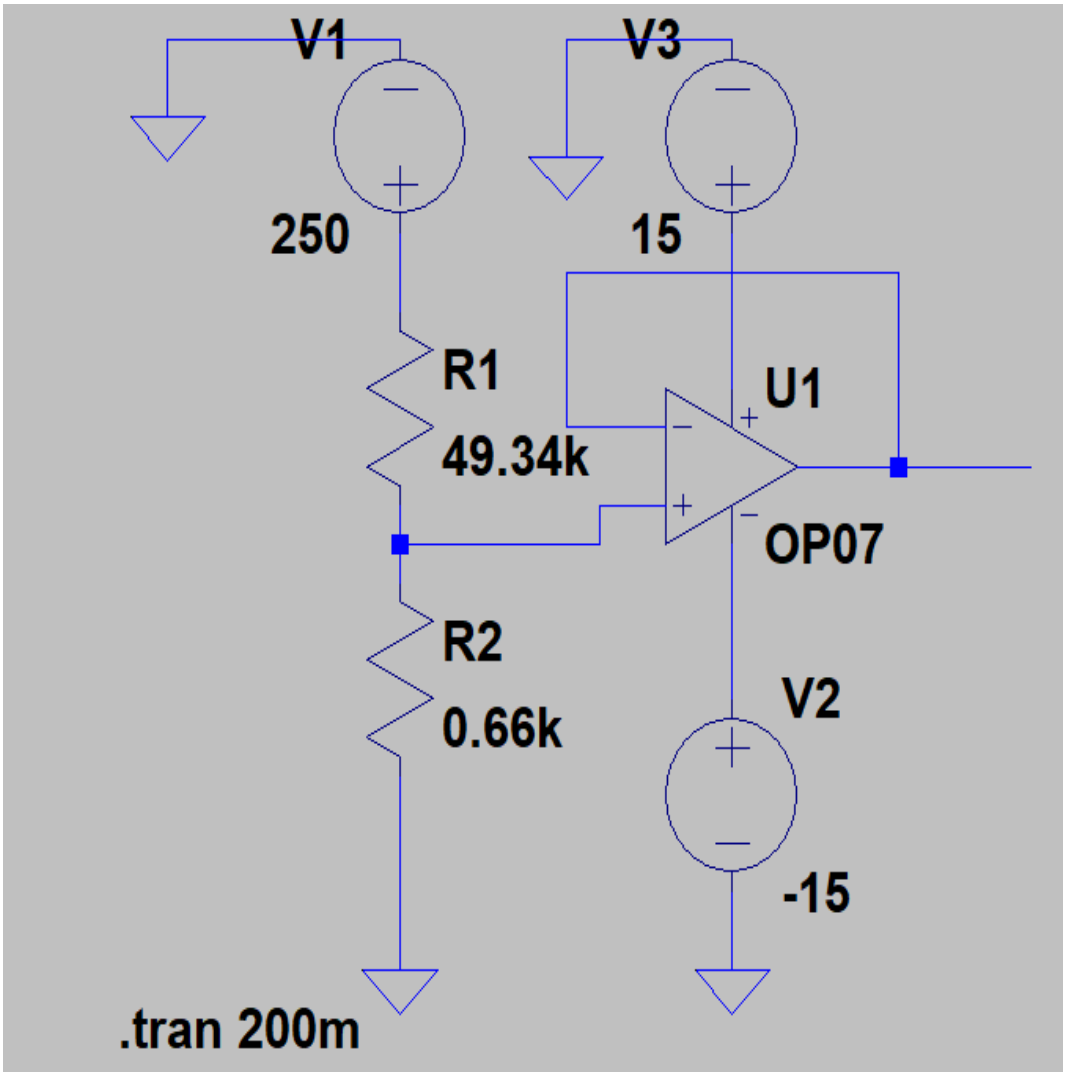

- A voltage follower circuit is also known as unity gain circuit because the output of the op-amp is same as the input. We used voltage divider circuit to lower down the voltage. We are doing this to get a compatible voltage for the use of microcontroller for adc sensing both at the input and output side.

7. DipTrace

DipTrace is quality Schematic Capture and PCB Design software that offers everything to create simple or complex multi-layer boards from schematic to manufacturing files.

- Schematic Capture-Advanced schematic tool with the support of multi-sheet and multi-level hierarchical design that allows the engineer to connect pins visually, without wires, using net ports, buses, or logically. Electrical Rule Check and hierarchy verification work from the earliest stages of design till the work is done. Schematic supports import and export of different EDA/CAD and netlist formats.
- PCB Layout- High-quality board-level design tool that features smart placement and routing tools, shape-based auto-router, copying hierarchical blocks, smart project structure, and verification features that ensure accuracy even for the most complex projects with high-speed signals. Real-time DRC allows for fixing errors on the fly and increases quality all the way to the project completion. Import and export various EDA, CAD, netlist, and manufacturing formats.
- Library Creation- Cross-module library management system with component and pattern editors and direct import from outside the DipTrace design environment. Component and Pattern editors support smart library structure and fast creation of components and patterns with integrated templates. Bulk pin naming, pad numbering, and editing features allow the designer to build multi-part complex components and patterns with hundreds of pins faster than ever before.
- 3D Modeling-Works as a part of the PCB Layout and Pattern Editor. The 3D module allows the designer to preview the board with installed components on any design stage, rotate and move it in real-time with hardware acceleration. Board 3D model can be exported to mechanical CAD (STEP, VRML). DipTrace imports 3DS, VRML, STEP, and IGES files as 3D models. 11,000+ models are supplied free of charge.

7.1 Basic Schematic of Boost Convertor

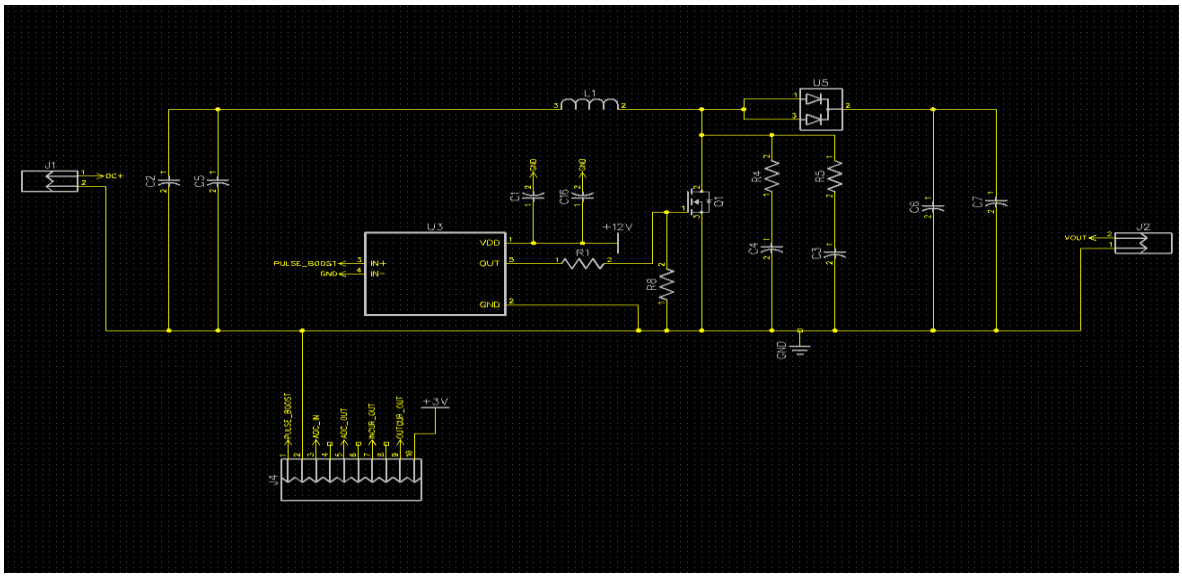

This is the basic schematic of the boost convertor. Here we have done the necessary connections similar to our model on LTspice. We have also connected 2 snubber circuits in parallel to the MOSFET to avoid over spiking of the voltage.

We have added a 10-pin connector which will be used to sense the input and output current and voltage in the circuit. We are also giving the pulse to the MOSFET from this 10-pin connector only.

Then we have used a gate driver (UCC27517ADBVR) which acts as a power amplifier that accepts a low power input from our microcontroller and produces the appropriate high current gate drive for the MOSFET. The connections for the gate driver are done as per the connections in the datasheet.

7.2 TLC2272ACDR: CMOS Amplifier

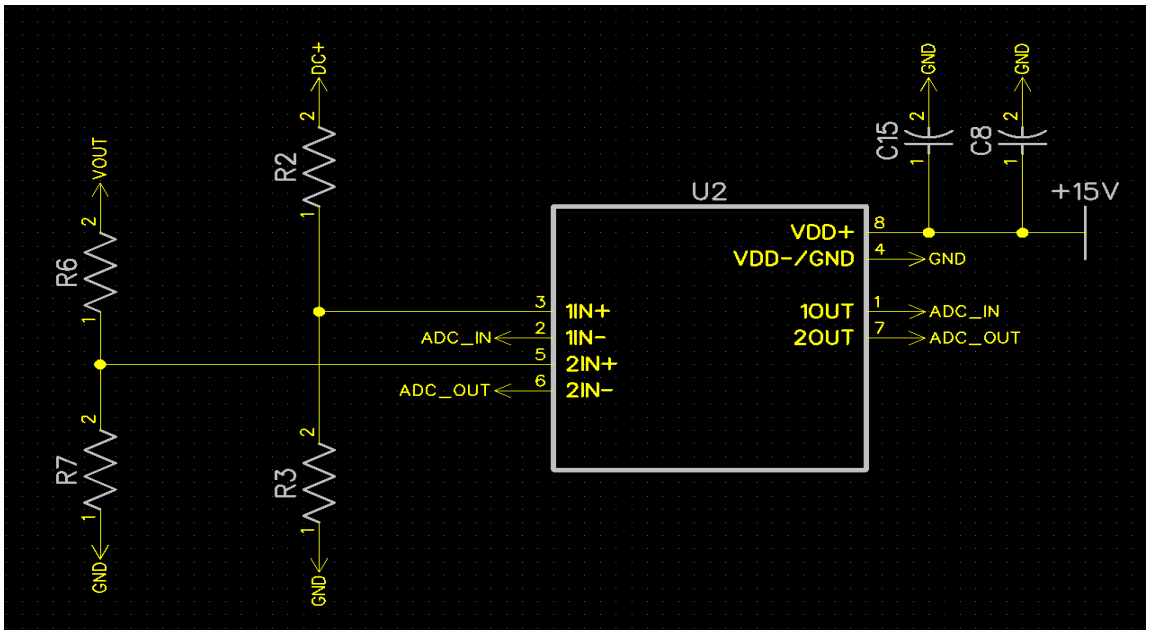

This is used in our circuit to convert the higher voltage into lower voltage (3.3V) such that the microcontroller can easily process the signal.

The connections are done as per the datasheet and the Voltage Follower OP-AMP Circuit which we simulated on LTspice.

7.3 HLSR-50P: Current Sensor

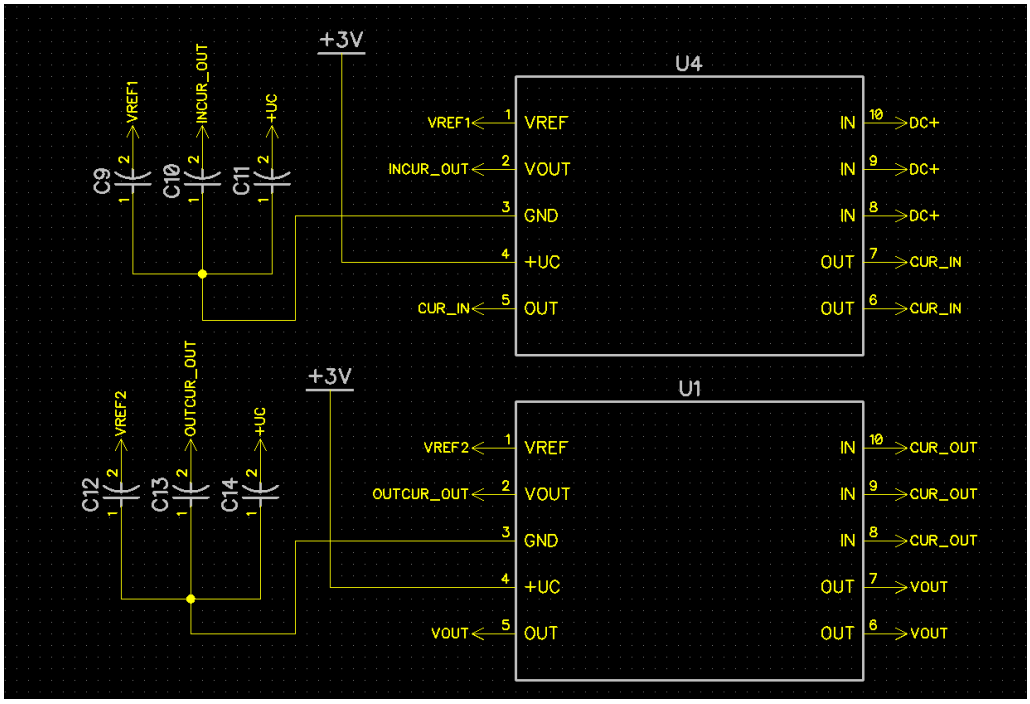

We have used 2 current sensors in this circuit; one for sensing the input current and the other one for sensing the output current. The connections are done as mentioned in the datasheet which I have attached below.

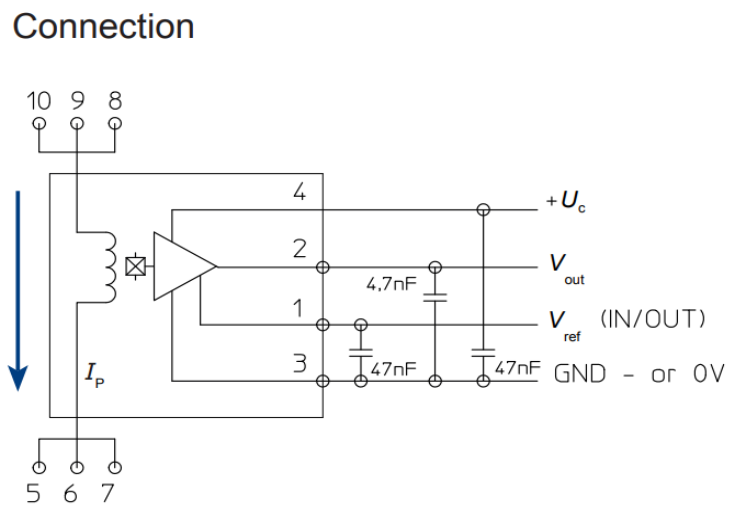

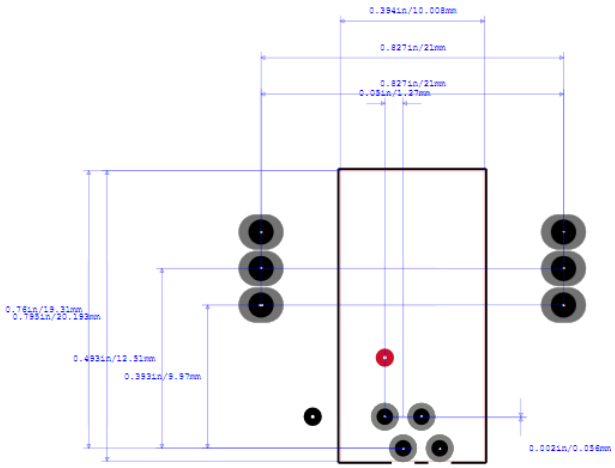

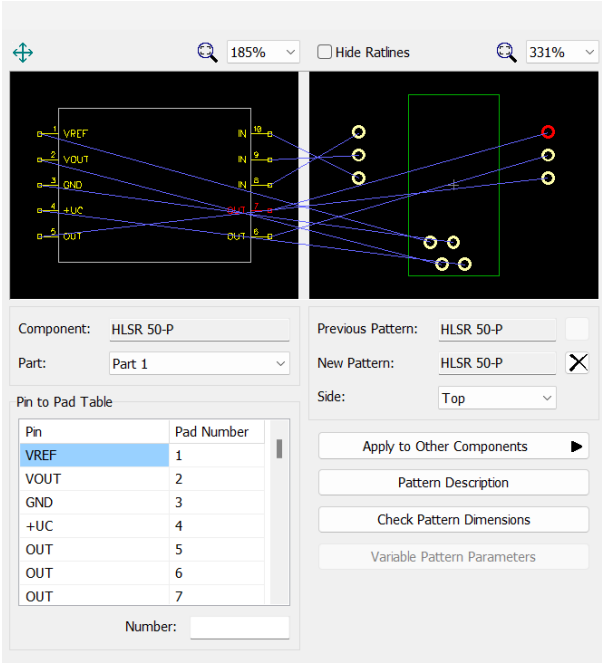

We couldn't locate the precise model in DipTrace, so we fashioned it ourselves using dimensions sourced from Ultra Librarian.

Initially, we designed the component by placing a rectangular box and connecting 10 pins accordingly, each serving a specific function as detailed above.

Subsequently, we crafted the pattern for the current sensor, adhering closely to the provided figures and dimensions.

We then aligned the 10 pads in the pattern with the corresponding 10 pins in the component, following the specifications in the datasheet.

This completes the process of creating our current sensor.

8. PCB LAYOUT

We then converted the whole schematic into PCB layout using the same rules and connections in the schematic.

We first placed all the high voltage components above the heat sink so that they get separated from the low voltage components. Then we placed the MOSFET and the diode next to each other while placing the gate driver just beside the MOSFET.

We then routed the whole PCB.

For ground, we used copper pour on the bottom layer such that every ground got connected to each other very easily.

We also used the copper pour for the wires carrying high current. Overall, it took us 3 days to get the whole PCB get ready to be given for fabrication.

The copper pours can be seen as a polygon which are filled with different colours as per different connections.

Top Layer of the PCB

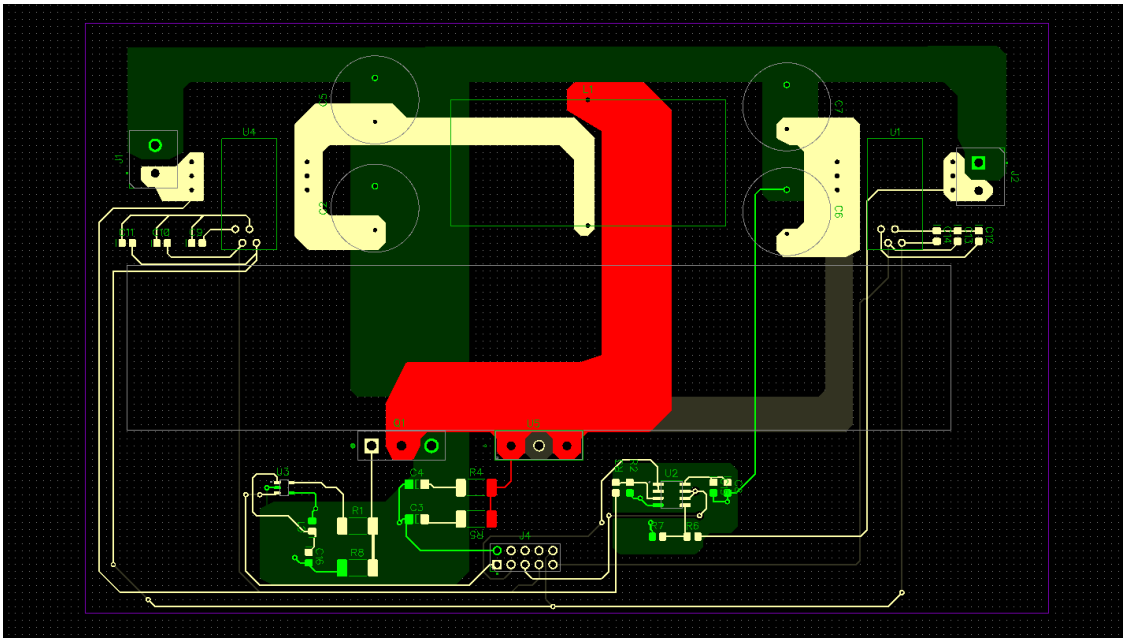

Bottom Layer of the PCB

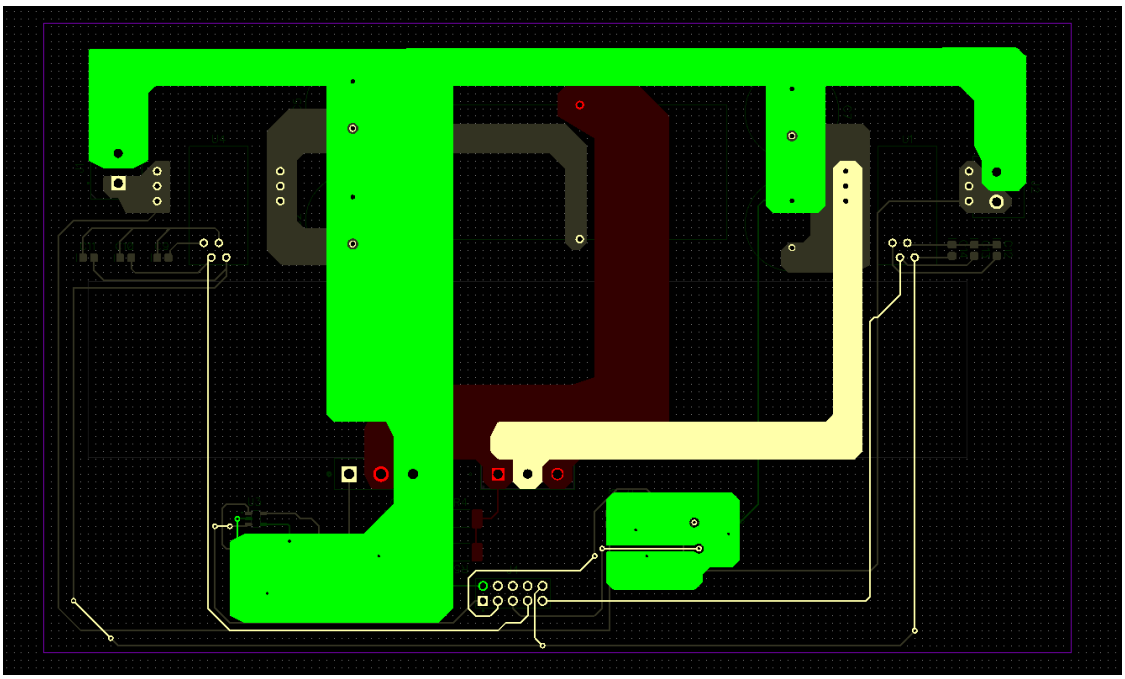

References

1. Texas Instruments, 2012**,** LAUNCHXL-F28027 C2000 Piccolo LaunchPad User's Guide,

   https://www.ti.com/lit/ug/spruhh2c/spruhh2c.pdf?ts=1719663838412&ref_url=https%253A%252F%252Fwww.ti.com%252Ftool%252FLAUNCHXL-F28027F

2. Texas Instruments, 2013**,** TMS320F28026F, TMS320F28027F InstaSPIN™-FOC Software Technical Reference Manual,

   https://www.ti.com/lit/ug/spruhp4/spruhp4.pdf?ts=1719664135703&ref_url=https%253A%252F%252Fwww.ti.com%252Ftool%252FLAUNCHXL-F28027F

3. Ultra Librarian, Footprint of HLSR 50P**,**

   https://app.ultralibrarian.com/details/3fe8c3f1-6e05-11ee-9288-0ae0a3b49db5/LEM/HLSR-50-P-SP33?uid=30528002&open=exports

4. LEM, 2022, Current Transducer HLSR-P series,

   https://www.lem.com/sites/default/files/products_datasheets/hlsr-p_series.pdf

5. Texas Instruments, 2016, TLC227x, TLC227xA: Advanced LinCMOS Rail-to-Rail Operational Amplifiers Datasheet,

   https://www.ti.com/lit/ds/slos190h/slos190h.pdf

6. Texas Instruments, 2015**,** UCC27517A Single-Channel High-Speed Low-Side Gate Driver with Negative Input Voltage Capability (with 4-A Peak Source and Sink) Datasheet,

   https://www.ti.com/lit/ds/symlink/ucc27517a.pdf?HQS=dis-dk-null-digikeymode-dsf-pf-null-wwe&ts=1719661465377&ref_url=https%253A%252F%252Fwww.ti.com%252Fgeneral%252Fdocs%252Fsuppproductinfo.tsp%253FdistId%253D10%2526gotoUrl%253Dhttps%253A%252F%252Fwww.ti.com%252Flit%252Fgpn%252Fucc27517a

7. Texas Instruments, 1999**,** Understanding Boost Power Stages in Switchmode Power Supplies,

   https://www.ti.com/lit/an/slva061/slva061.pdf?ts=1719665657647&ref_url=https%253A%252F%252Fwww.google.com%252F

Glossary

Boost Converter: A type of DC-DC converter that steps up (boosts) input voltage to a higher output voltage using an inductor, capacitor, diode, and switch (typically a MOSFET).

LTSpice: Simulation software used for analyzing analog electronic circuits.

DipTrace: Schematic capture and PCB layout software that supports multi-sheet and multi-level hierarchical design.

Pulse Width Modulation (PWM): Modulation technique where the width of pulses in a pulse train is varied based on a modulating signal, used for efficient power control.

Analog-to-Digital Converter (ADC): Device that converts continuous analog signals into discrete digital signals for processing in digital systems.

Microcontroller: Integrated circuit used to control electronic devices and systems, capable of processing input signals and controlling output signals

.

Voltage Follower: Operational amplifier circuit that produces an output voltage equal to its input voltage, used for impedance matching and buffering.

OP-AMP (Operational Amplifier): Active electronic component used to amplify voltage differences between its input terminals.

Current Sensor: Device used to measure electric current flow, crucial for monitoring and controlling current levels in circuits.

PCB (Printed Circuit Board) Layout: Design and arrangement of electronic components and connections on a board for manufacturing.

3D Modeling: Process of creating three-dimensional representations of physical objects or systems using computer software.

Snubber Circuit: Circuit designed to suppress voltage spikes and reduce electromagnetic interference (EMI) in electronic circuits.