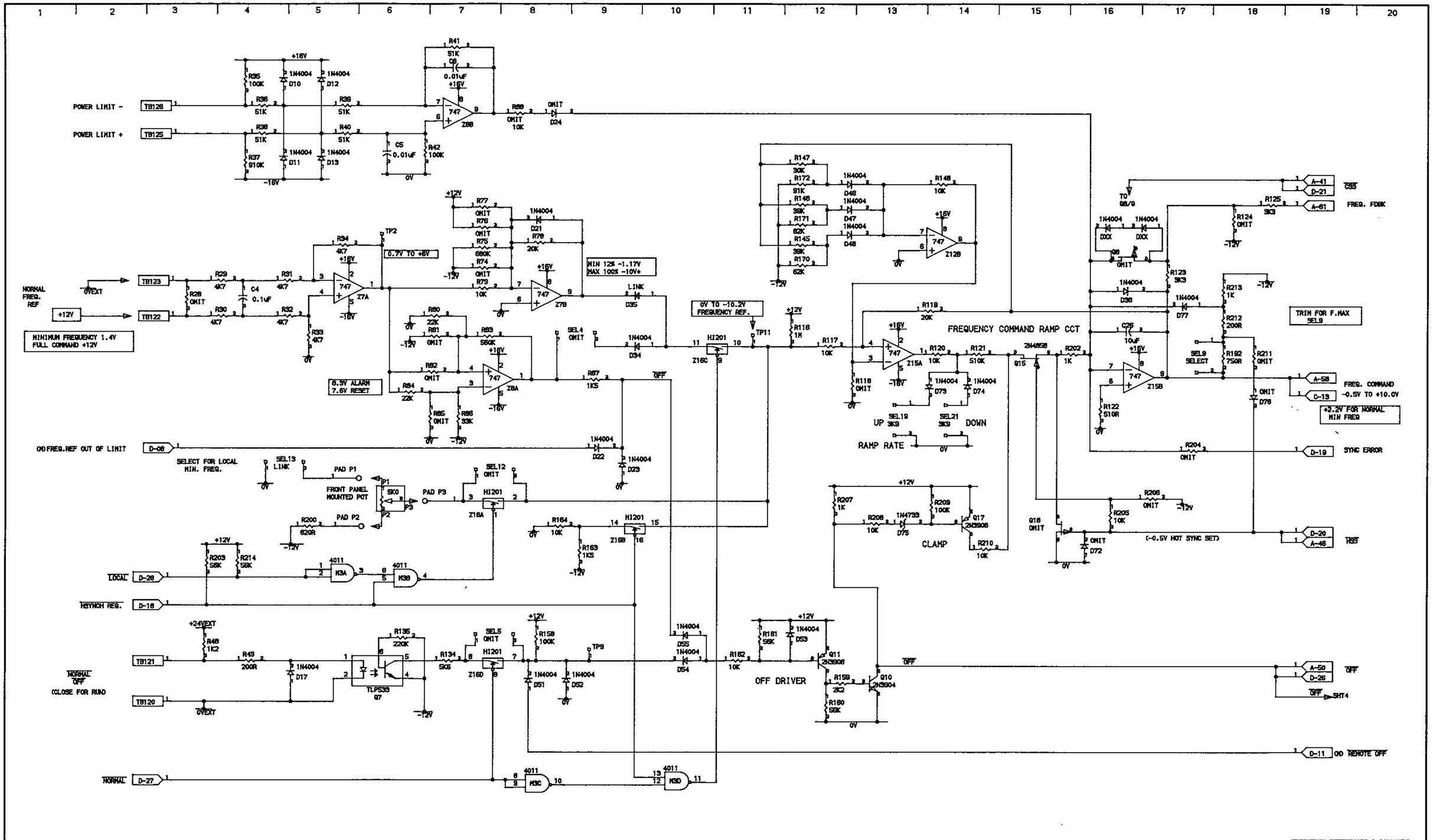

DRAWN: PRR	DATE: 24/11/87	REV	DESCRIPTION	DATE	BY	CH
CHECKED:	APPROVED:					
SCALE: 1:1	PLOTTED: 03 DEC 1987					

HILL GRAHAM CONTROLS LTD
High Wycombe Bucks England
Tel (0494) 40121

A.F. MODULE (PZ)

FRONT PANEL TOP

RO RO FERRY
PZ TRADING

JOB:	DRAWING:	PAGE:	REV:
6180	Y008.1		C4