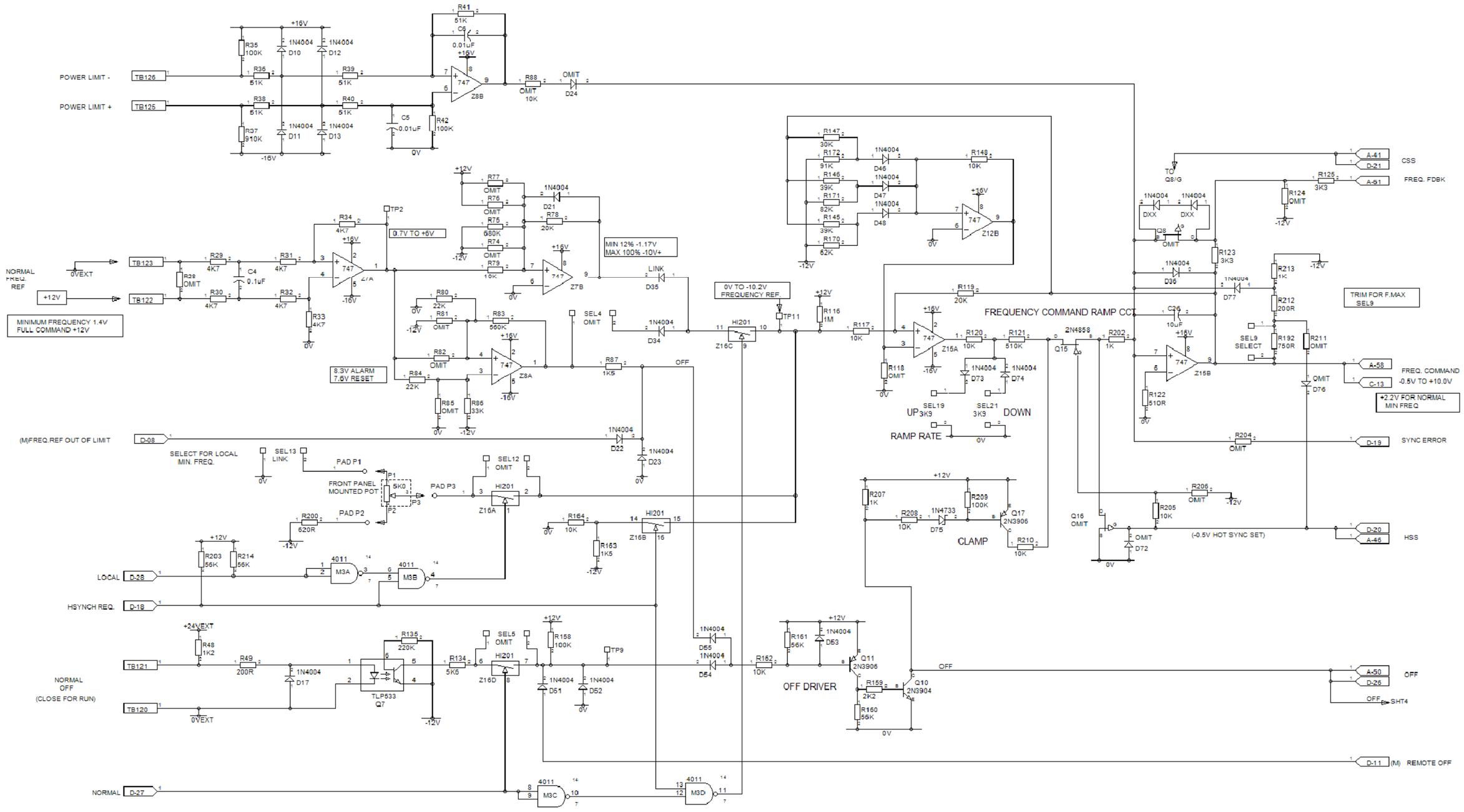


FREQUENCY REFERENCES & COMMANDS

NOTES:

| ZONE | LTR. | REVISION | DATE | APPRV. |
|---|---|---|---|---|
| | B | AS BUILT | 12/05/16 | GJB |

MATERIAL:

FINISH:

DO NOT SCALE DRAWING

UNLESS OTHERWISE SPECIFIED DIMENSIONS ARE IN MILLIMETRES
TOLERANCES ARE:
FRACTIONS ± 1/64 DECIMALS .XX±.01 .XXX±.005 ANGLES ± 30'

THIS DOCUMENT IS CONFIDENTIAL, PROPRIETARY INFORMATION OF CONTRELEC LIMITED. DISCLOSURE TO OTHER PARTIES OUTSIDE THE NORMAL USE OF CONTRELEC WITHOUT ITS EXPRESS WRITTEN PERMISSION IS STRICTLY PROHIBITED. COPYRIGHT (C) CONTRELEC LIMITED. ALL RIGHTS RESERVED.

| APPROVALS | | DATE |
|---|---|---|
| DRAWN | ACAD | 06/07/16 |
| CHECKED | GJB | |
| APPROVAL | | |
| RELEASED | | |

TITLE
DRILLERS CONSOLE
HAND THROTTLE
POTENTIOMETER ADAPTER

ENQUIRY/JOB NUMBER
KCA DEUTAG

Contrelec
High Wycombe, Bucks ENGLAND HP13 5YZ
Tel: +44 01494 526270 Email: sales@contrelec.co.uk

DRAWING No.
DCHT - 01

FILE: DCHT
SCALE: NTS SHT OF 1 REV. 1