REVISION RECORD			
REV:	Description Summary of Revision	APPROVED:	DATE:
1.0	初始版本		

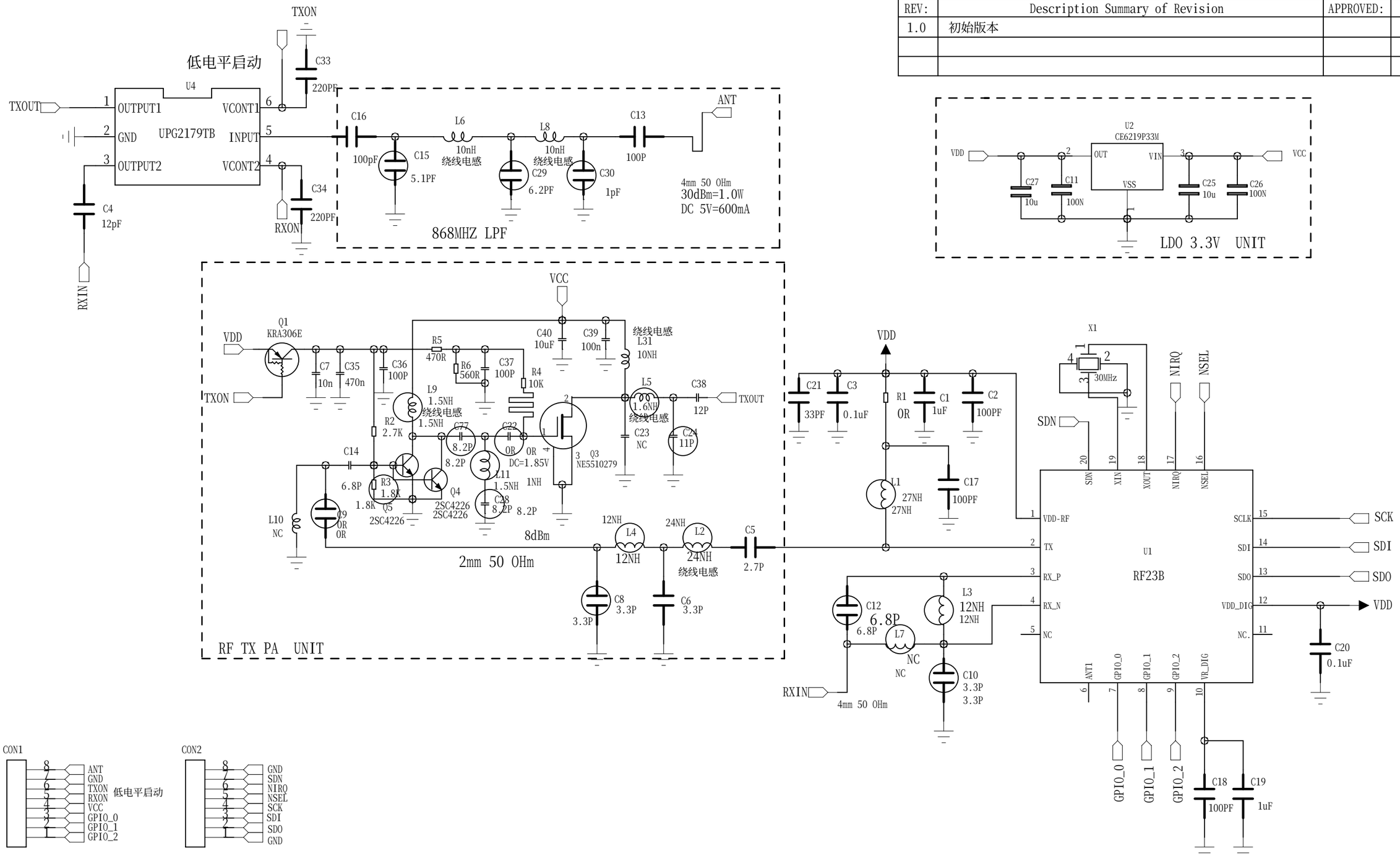

Frequency Band	R1 OHM	L1 NH	L2 NH	L3 NH	L4 NH	L5 NH	L7 NH	C5 PF	C6 PF	C7 PF	C8 PF	C9 PF	C10 PF	C12 PF
315MHz														
434MHz	22	100	56	33	33	27	33	2.7	3.3	6.8	NC	220	8.2	3
868MHz														
915MHz														

HOPERF ELECTRONIC		COMPANY: Hope Microelectronics Co., Ltd
DRAWN: Andy	DATED: 2012/05-28	TITLE: RFM23BPS-01B 868
APPROVAL:	DATED:	REV: 2.0 / SHEET: 1 OF 1