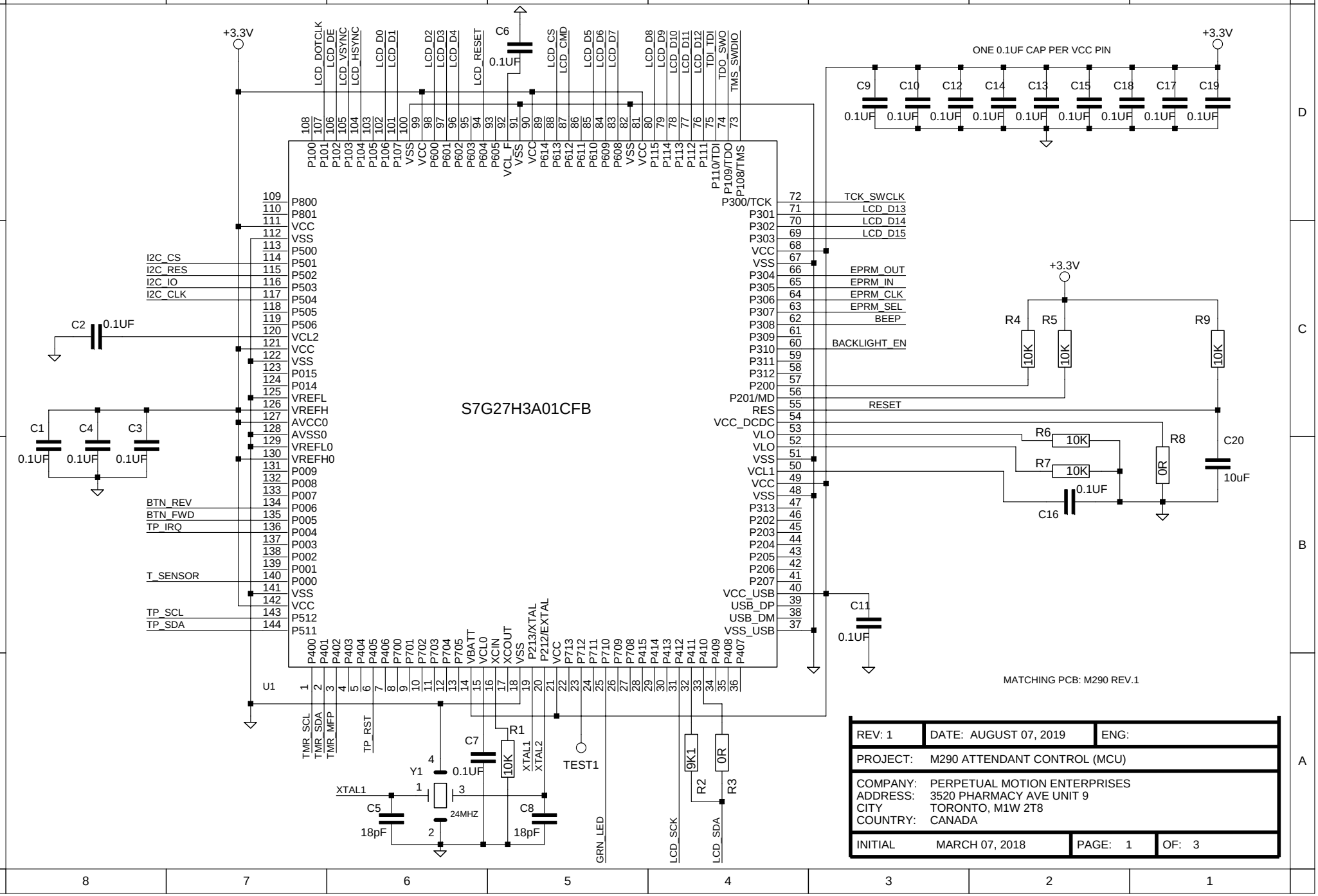
S7G27H3A01CFB
U1
+3.3V
ONE 0.1UF CAP PER VCC PIN
C9 C10 C12 C14 C13 C15 C18 C17 C19
0.1UF
C6 0.1UF
C2 0.1UF
C1 C4 C3
I2C_CS
I2C_RES
I2C_IO
I2C_CLK
BTN_REV
BTN_FWD
TP_IRQ
T_SENSOR
TP_SCL
TP_SDA
LCD_DOTCLK
LCD_DE
LCD_VSYNC
LCD_HSYNC
LCD_D0
LCD_D1
LCD_D2
LCD_D3
LCD_D4
LCD_RESET
LCD_CS
LCD_CMD
LCD_D5
LCD_D6
LCD_D7
LCD_D8
LCD_D9
LCD_D10
LCD_D11
LCD_D12
TDI_TDI
TDO_SWO
TMS_SWDIO
TCK_SWCLK
LCD_D13
LCD_D14
LCD_D15
EPRM_OUT
EPRM_IN
EPRM_CLK
EPRM_SEL
BEEP
BACKLIGHT_EN
RESET
R4 R5 R9
10K
R6 R7 R8
0R
C20 10uF
C16 0.1UF
C11 0.1UF
TMR_SCL
TMR_SDA
TMR_MFP
TP_RST
C7 0.1UF
R1 10K
Y1 24MHZ
XTAL1
XTAL2
C5 18pF
C8 18pF
TEST1
GRN_LED
LCD_SCK
LCD_SDA
R2 9K1
R3 0R
MATCHING PCB: M290 REV.1
REV: 1
DATE: AUGUST 07, 2019
ENG:
PROJECT: M290 ATTENDANT CONTROL (MCU)
COMPANY: PERPETUAL MOTION ENTERPRISES
ADDRESS: 3520 PHARMACY AVE UNIT 9
CITY TORONTO, M1W 2T8
COUNTRY: CANADA
INITIAL MARCH 07, 2018
PAGE: 1
OF: 3

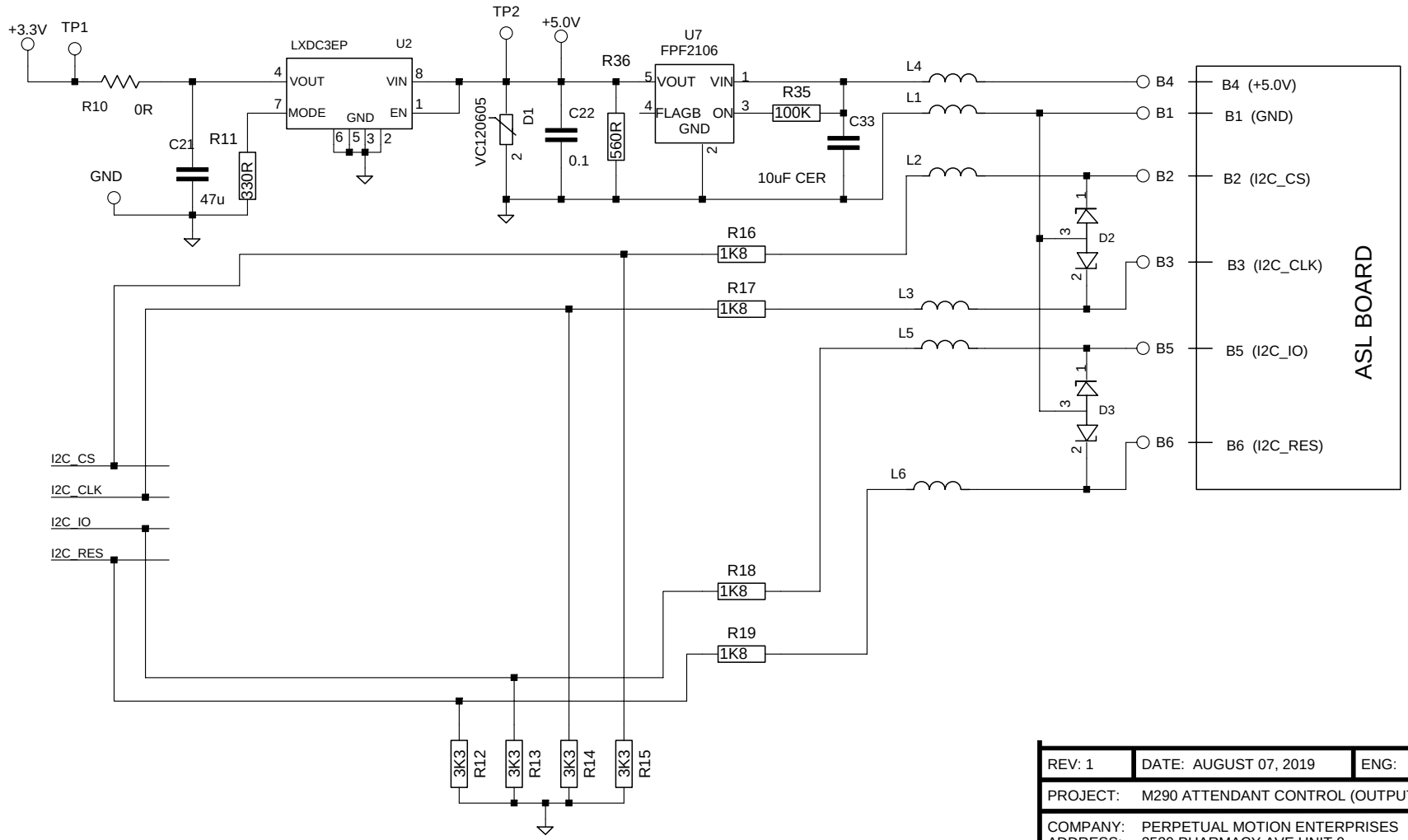

REV: 1	DATE: AUGUST 07, 2019	ENG:
PROJECT:	M290 ATTENDANT CONTROL (OUTPUT)	
COMPANY: PERPETUAL MOTION ENTERPRISES ADDRESS: 3520 PHARMACY AVE UNIT 9 CITY TORONTO, M1W 2T8 COUNTRY: CANADA		
INITIAL MARCH 07, 2018	PAGE: 2	OF: 3

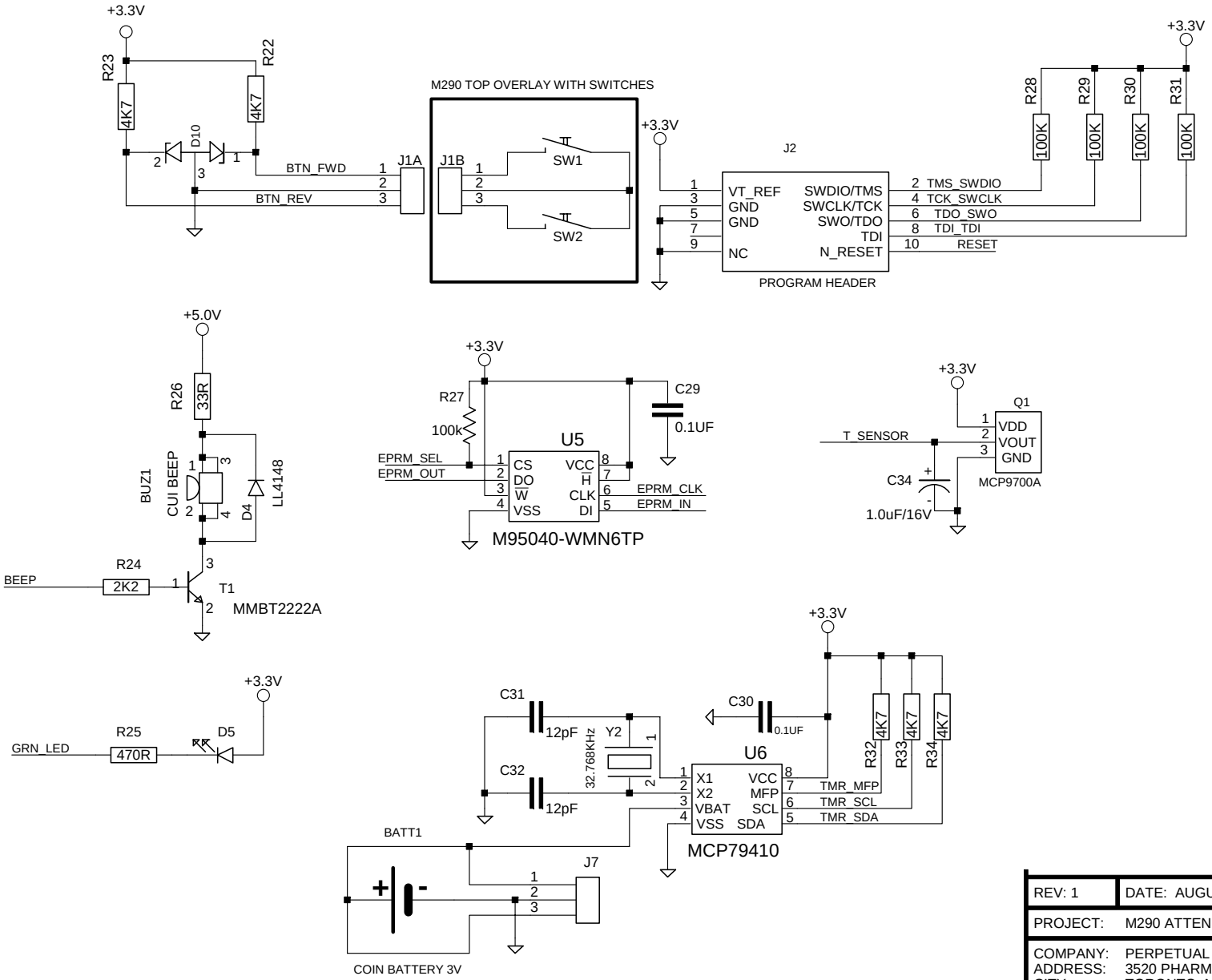

REV: 1	DATE: AUGUST 07, 2019	ENG:
PROJECT:	M290 ATTENDANT CONTROL (OTHERS)	
COMPANY: PERPETUAL MOTION ENTERPRISES ADDRESS: 3520 PHARMACY AVE UNIT 9 CITY TORONTO, M1W 2T8 COUNTRY: CANADA		
INITIAL MARCH 07, 2018	PAGE: 3	OF: 3