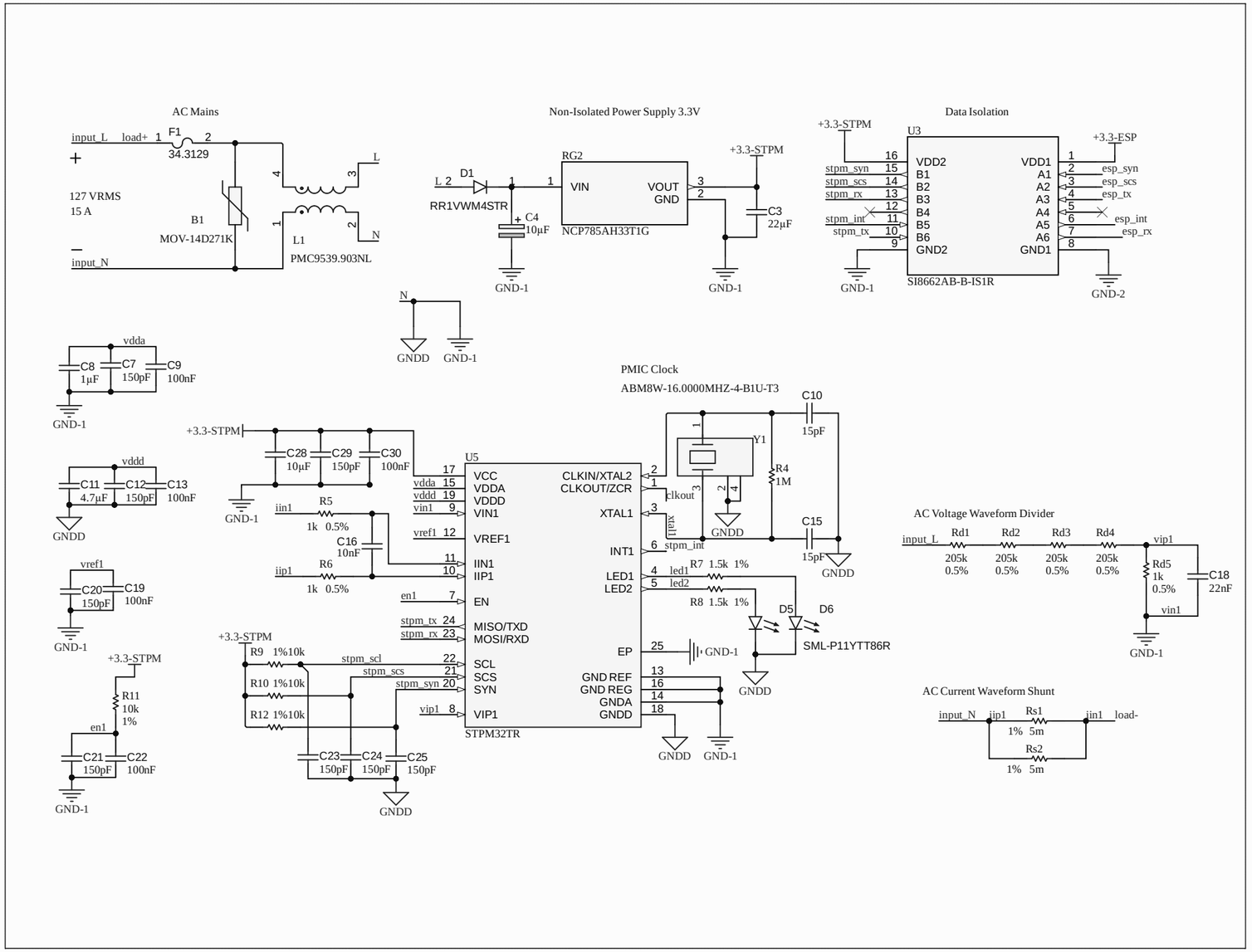

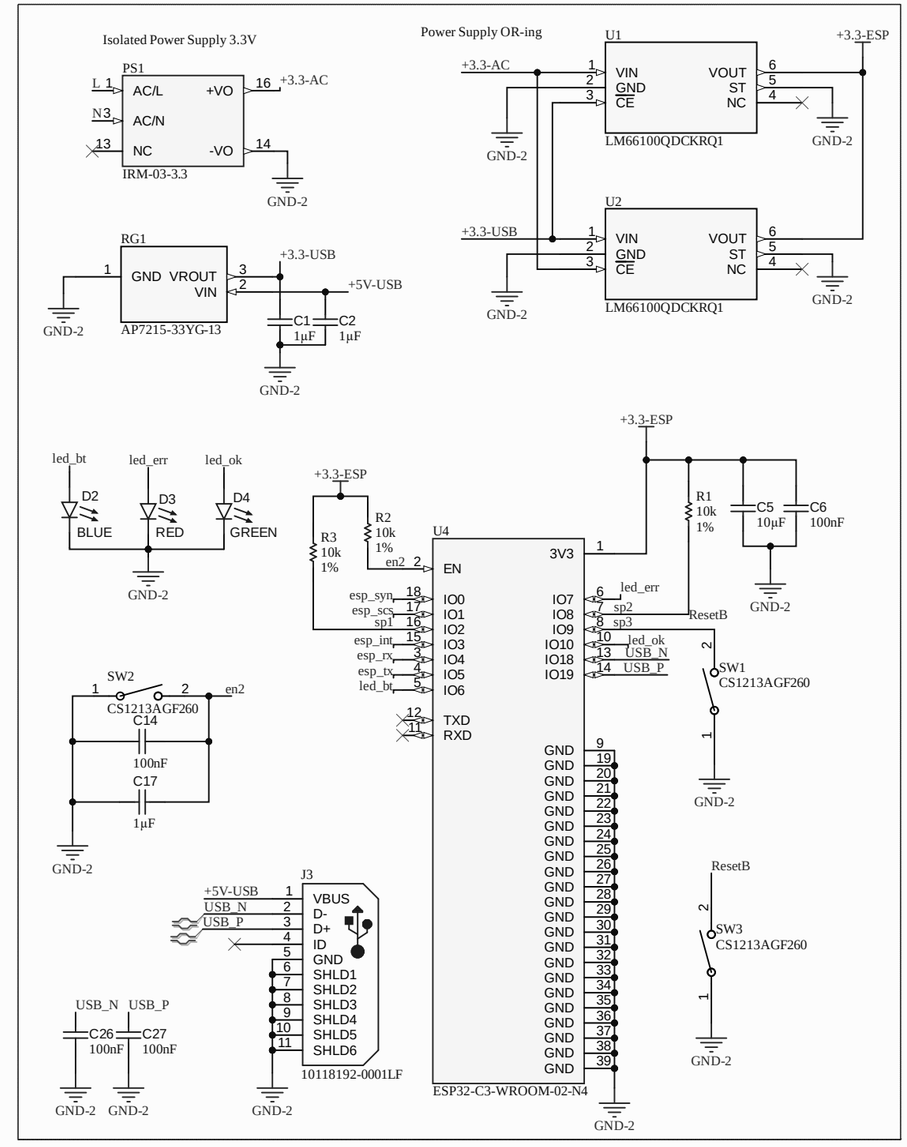

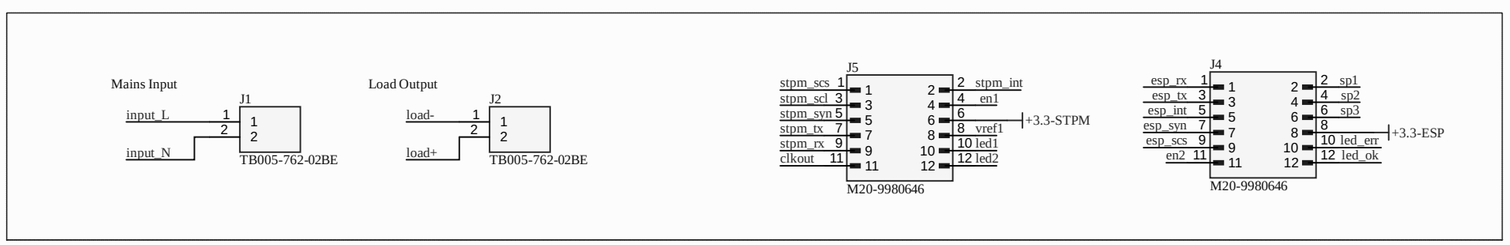

Title		
IoT-Enabled Power Meter with Real-Time Monitoring		
Size: B	Number	Revision: A
Date: 4/22/2026		Sheet of
File: C:\Users\..\Sheet1.SchDoc		Drawn By: Osiel Gastélum