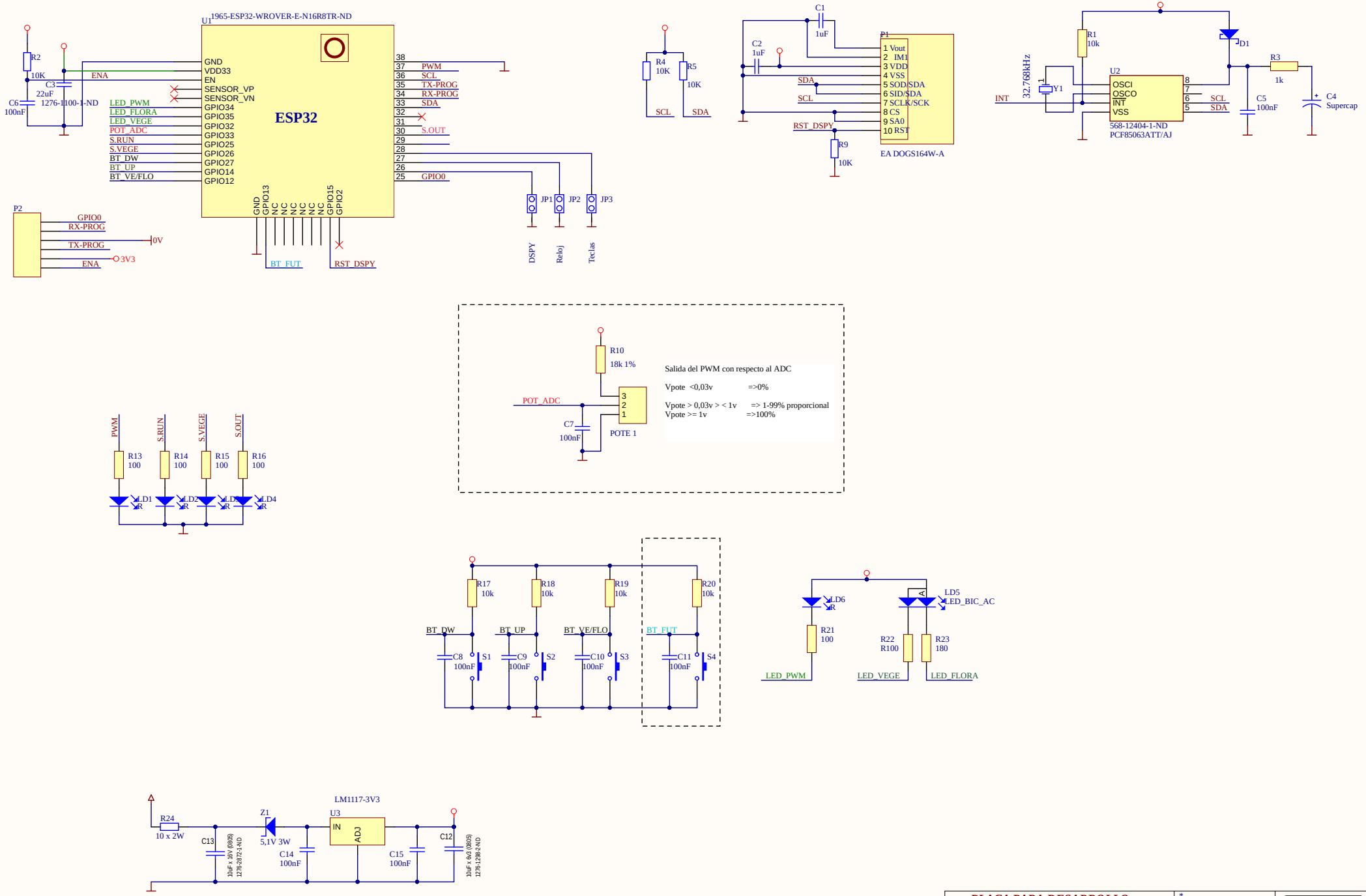

Title	*PLACA PARA DESARROLLO*		
Size: A3	Number:	Revision:*	
Date: 30/8/2024	Time: 10:18:54	Sheet * of *	
File: C:\IMPRESOS\IMPRESOS LUMENAR\En Produccion\OID L0210 (PHYTOLOGY nt)\proto\proto.SchDoc			