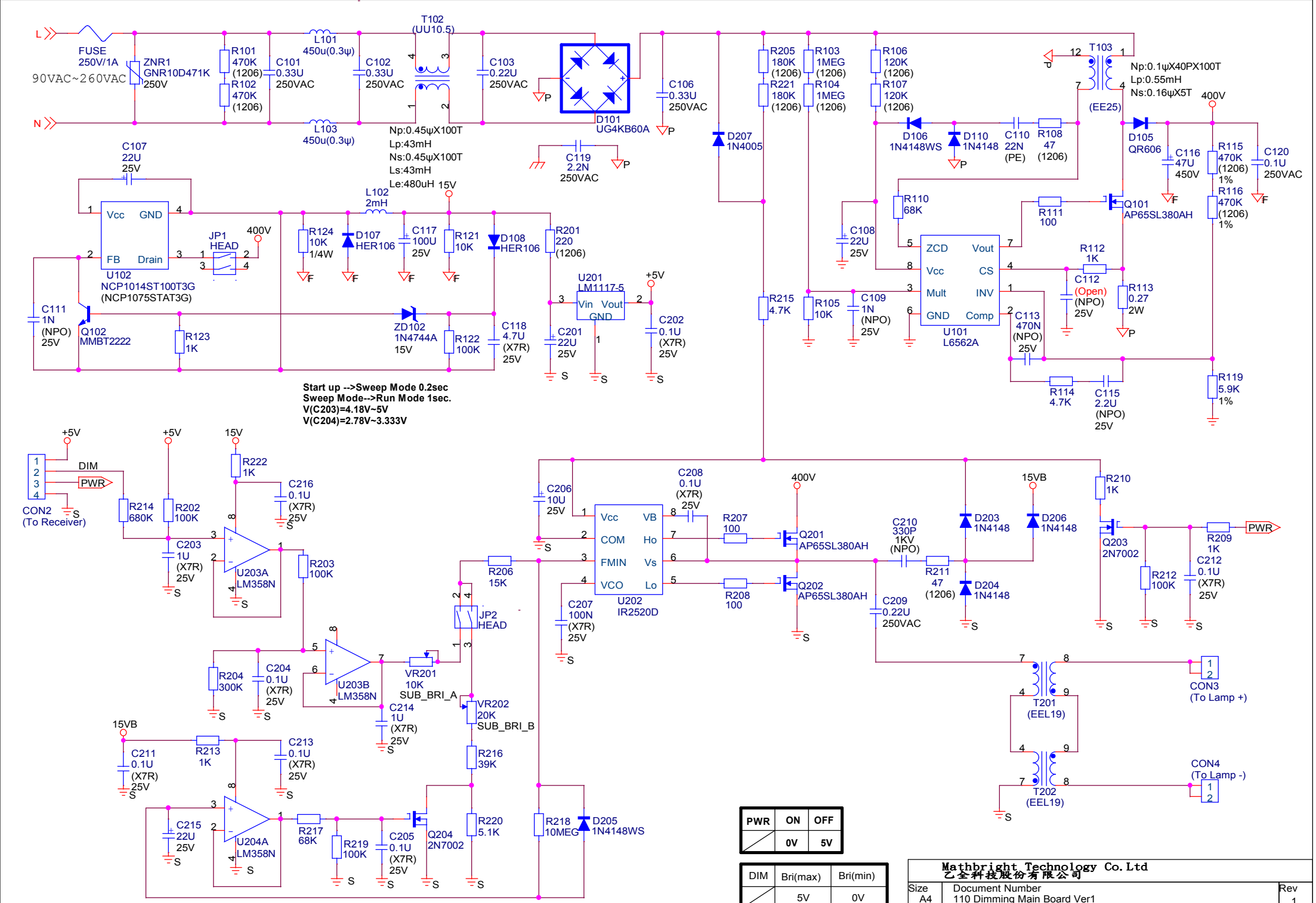

PWR	ON	OFF
	0V	5V

DIM	Bri(max)	Bri(min)
	5V	0V

Mathbright Technology Co.Ltd
乙全科技股份有限公司

Size	Document Number	Rev
A4	110 Dimming Main Board Ver1	1

Date: Wednesday, June 14, 2017 Sheet 1 of 1