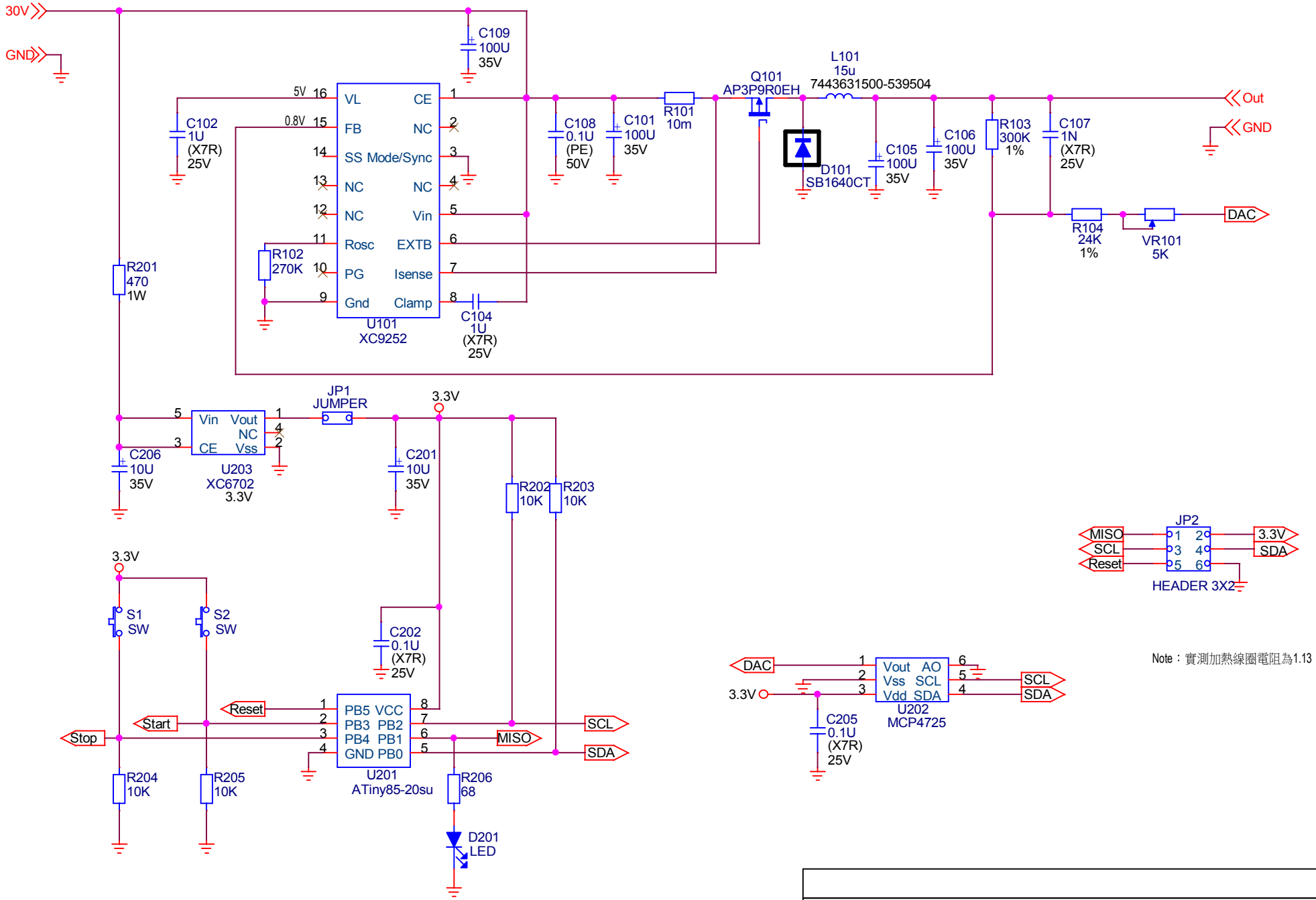

Note：實測加熱線圈電阻為1.13

Title	Programable constant Current controller	
Size A	Document Number Ver2	Rev V2.0
Date: Saturday, June 24, 2017	Sheet 1 of 1	