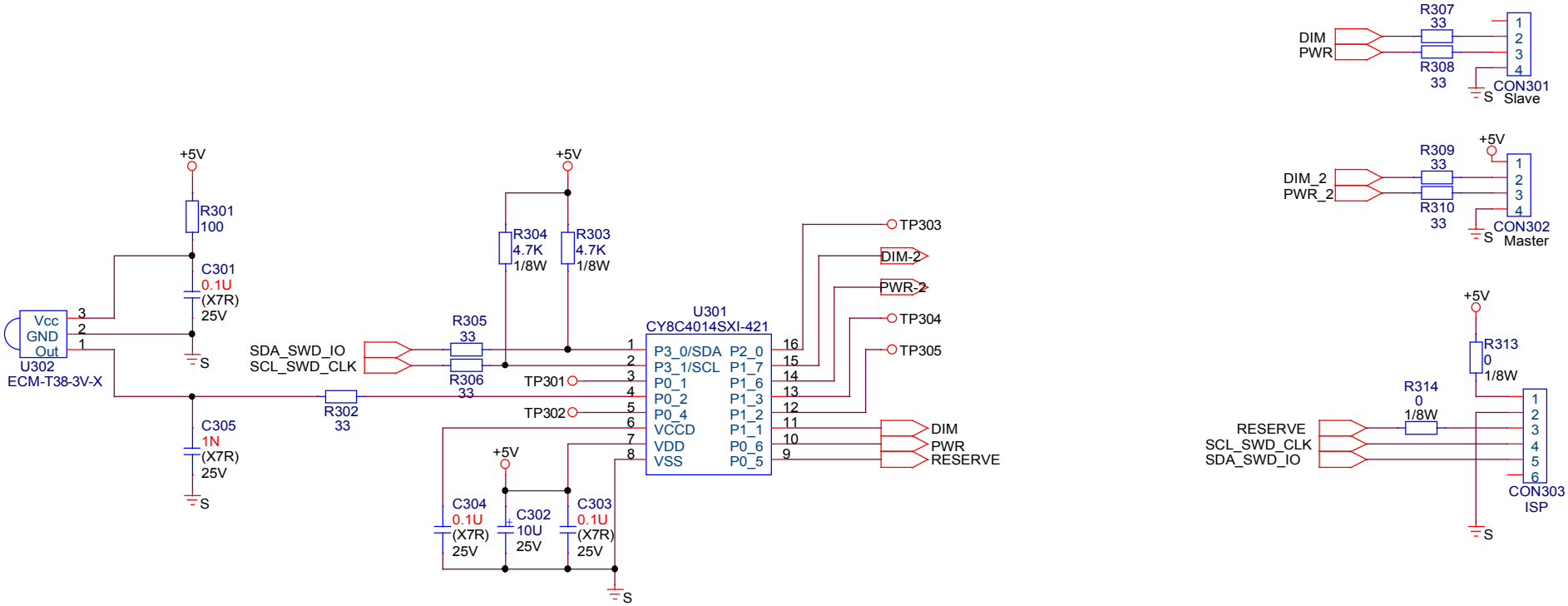

Title	IR Remote with PSoc4	
Size A4	Document Number 065 Dimming Receiver Board(Ver3.1)	Rev 2
Date: Monday, July 04, 2016	Sheet 1 of 1	