Project 76: Barrel Shifter

A Comprehensive Study of Advanced Digital Circuits

By: Nikunj Agrawal , Gati Goyal, Abhishek Sharma , Ayush Jain

Documentation Specialist: Dhruv Patel & Nandini Maheshwari

Created By Team Alpha

Contents

1 Introduction 3

2 Background 3

3 Structure and Operation of Barrel Shifter 3
- 3.1 Structure 3
- 3.2 Operation 4

4 Implementation in System Verilog 4

5 Simulation Results 5

6 Test Bench 5

7 Schematic 6

8 Advantages and Disadvantages of Barrel Shifter 6

9 Synthesis Design 7

10 Conclusion 7

11 FAQ for Barrel Shifter 8

Created By Team Alpha

1 Introduction

A barrel shifter is a specialized combinational circuit designed to shift or rotate data efficiently in digital systems. Unlike traditional shift registers, which rely on sequential shifting through clock cycles, a barrel shifter achieves the desired shift in a single operation, making it ideal for high-speed applications.

The primary function of a barrel shifter is to shift binary data by a specified number of positions, either to the left or right, or to perform bitwise rotations. It is widely used in processors, digital signal processing, and arithmetic logic units (ALUs) to accelerate operations like multiplication, division, and bit manipulation.

A barrel shifter consists of multiplexers arranged in a hierarchical structure, allowing it to perform shifts based on control inputs that specify the number of positions to shift. This parallel design eliminates the delay associated with sequential shifts, making the barrel shifter an indispensable component in modern high-performance computing systems.

This document explores the architecture, operation, advantages, and applications of barrel shifters, highlighting their role in enabling efficient and scalable data manipulation.

2 Background

The barrel shifter has its origins in digital systems that require efficient data manipulation, especially in applications where fast and frequent shifting or rotating of binary data is necessary. Early computer systems and microprocessors had basic shifting mechanisms, typically relying on sequential shift registers. These systems, however, suffered from time delays as each bit had to be moved in a series of clock cycles, which limited their performance.

As the need for high-speed arithmetic and logic operations grew, particularly in processors and digital signal processing (DSP) applications, the barrel shifter was developed to address these performance bottlenecks. The barrel shifter allows data to be shifted or rotated in one step, drastically reducing the number of cycles needed for such operations. This is accomplished through the use of multiplexers, which are arranged in a way that enables parallel shifting or rotating, rather than the serial shifting of individual bits.

Barrel shifters became particularly important with the rise of pipelined processors and high-performance computing systems in the late 20th century. Their ability to handle bit shifts and rotations in a single cycle was a significant advantage in speeding up operations like multiplication, division, and bitwise logical operations. They are now a standard feature in modern processors, graphics processing units (GPUs), and other high-speed digital circuits.

Today, barrel shifters are used in a wide range of applications, from general-purpose computing to specialized systems like cryptography, signal processing, and image manipulation, where rapid and efficient data transformation is critical.

Created By Scan It Pro

3 Structure and Operation of Barrel Shifter

3.1 Structure

A barrel shifter is a combinational circuit composed of several key components that enable the shifting or rotating of binary data. Its structure typically includes the following:

Multiplexers (MUX): The core component of a barrel shifter is a set of multiplexers, which are used to select the appropriate data bits for shifting. The multiplexers are connected in stages, where each stage selects bits that correspond to the desired shift positions.

Data Input Lines: The data input lines carry the binary data to be shifted. The number of input lines corresponds to the bit-width of the data, typically 8, 16, 32, or 64 bits, depending on the design.

Control Lines: The control lines specify the number of positions the data should be shifted, either left or right. These lines are fed into the multiplexers, which use them to determine which bits to select for the output.

Shift Output Lines: These are the output lines where the shifted (or rotated) data is delivered. The number of output lines matches the bit-width of the input data.

Shift Direction Control: Some barrel shifters also include a control signal to determine the direction of the shift, either to the left (logical shift) or to the right (logical shift). In some cases, it also supports rotations, where bits shifted out from one end are reinserted at the other end.

3.2 Operation

The operation of a barrel shifter can be broken down into the following steps:

Input Data Loading: The binary data to be shifted is loaded onto the input lines. This data could be a multi-bit word (e.g., 8-bit, 16-bit, etc.) that will undergo shifting or rotating operations.

Control Signal Processing: The control lines (typically a binary number) specify the number of positions the data needs to be shifted. For example, a 3-bit control line would allow shifting by 1, 2, or 4 positions. These control signals are fed to the multiplexers to select the correct data bits for the output.

Multiplexer Operation: The multiplexers are configured in stages (each stage corresponding to a certain shift amount), and each multiplexer selects one bit from the input data based on the control signals. The multiplexers essentially connect the data bits to their new positions based on the required shift amount.

Shift Operation:

Left Shift: For a left shift, the data is moved to the left, and the rightmost bits are filled with zeros (or a predefined value for arithmetic shifts). Right Shift: For a right shift, the data is moved to the right, and the leftmost bits are filled with zeros (or sign-extended bits for arithmetic shifts). Rotation: In rotation mode, bits shifted out from one end of the register are re-inserted at the opposite end, effectively "rotating" the data. Output: The final result, the shifted (or rotated) binary data, is then available on the output lines, ready for further processing or use in subsequent stages of the circuit.

Example For an 8-bit barrel shifter, if the input data is 10101100 and the control signal specifies a left shift of 2 positions, the data will be transformed to 10110000. Similarly, a right shift of 2 positions would result in 00101011.

Created By Team Alpha

4 Implementation in System Verilog

Below is an example of a Barrel Shifter implemented in System Verilog:

Listing 1: Barrel Shifter

```
    module barrel_shifter #(
    parameter WIDTH = 8
) (
    input logic [WIDTH-1:0] data_in,
    input logic [$clog2(WIDTH)-1:0] shift_amount,  // Number of bits
        to shift
    input logic shift_dir,  // 0: Left shift, 1: Right shift
    output logic [WIDTH-1:0] data_out
);

    always_comb begin
        if (shift_dir == 1'b0)
            data_out = data_in << shift_amount;  // Left shift
        else
            data_out = data_in >> shift_amount;  // Right shift
    end

endmodule
```

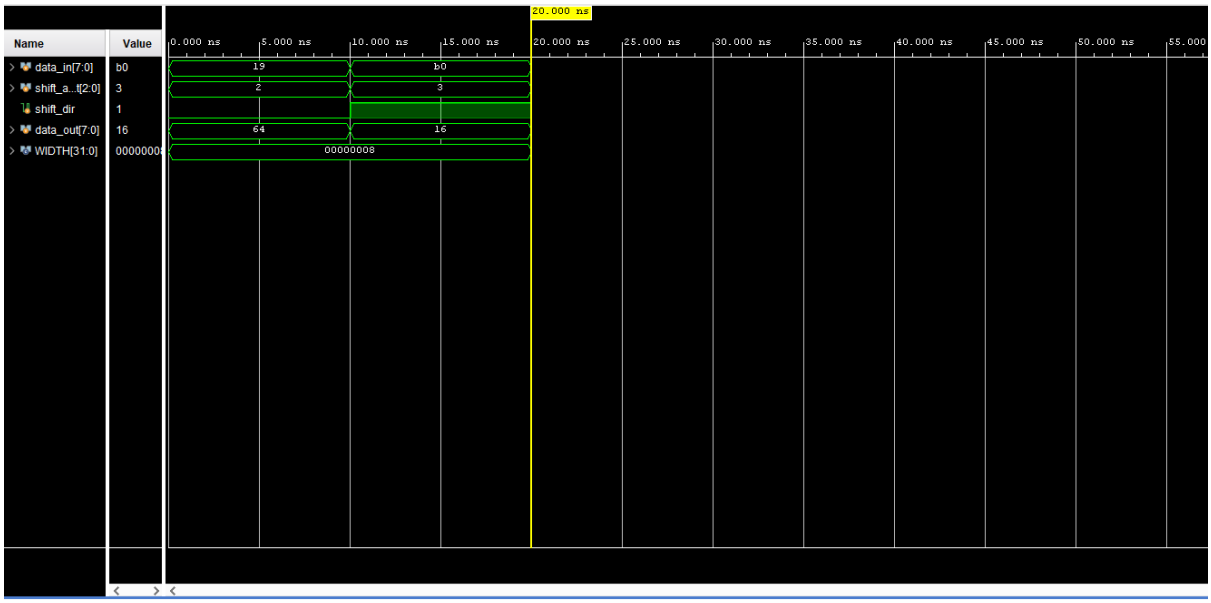

Figure 1: Simulation results of Barrel Shifter

5 Simulation Results

6 Test Bench

The following test bench verifies the functionality of the Barrel Shifter :

Listing 2: Barrel Shifter Testbench

```
module tb_barrel_shifter;

 parameter WIDTH = 8;
 logic [WIDTH-1:0] data_in;
 logic [$clog2(WIDTH)-1:0] shift_amount;
 logic shift_dir;
 logic [WIDTH-1:0] data_out;

 // Instantiate the barrel shifter
 barrel_shifter #(.WIDTH(WIDTH)) uut (
     .data_in(data_in),
     .shift_amount(shift_amount),
     .shift_dir(shift_dir),
     .data_out(data_out)
 );

 // Test sequence
 initial begin
     // Test Case 1: Shift left by 2
     data_in = 8'b00011001;  // 25 in decimal
     shift_amount = 3'd2;
     shift_dir = 1'b0;  // Left shift
     #10;
     $display("Left Shift by 2 - Expected: %b, Got: %b", data_in <<
        shift_amount, data_out);

     // Test Case 2: Shift right by 3
     data_in = 8'b10110000;  // 176 in decimal
```

```
        shift_amount = 3'd3;
        shift_dir = 1'b1;  // Right shift
        #10;
        $display("Right Shift by 3 - Expected: %b, Got: %b", data_in
            >> shift_amount, data_out);

        $stop;
    end

endmodule
```

7 Schematic

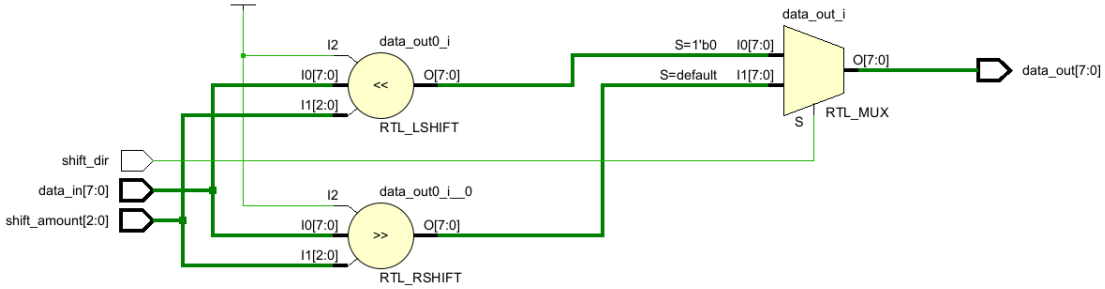

Figure 2: Schematic of Barrel Shifter

8 Advantages and Disadvantages of Barrel Shifter

Advantages

- **Fast Shifting and Rotation:** Barrel shifters allow data to be shifted or rotated in a single clock cycle, making them significantly faster than traditional shift registers, which require multiple clock cycles for each shift operation.
- **Parallel Operation:** Unlike serial shift registers, barrel shifters use multiplexers arranged in stages, which enables parallel shifting or rotation of data. This parallel operation reduces the latency associated with sequential shifting.
- **Efficient for High-Speed Applications:** Barrel shifters are well-suited for high-speed processors and digital systems, where quick bit manipulation is essential for tasks such as arithmetic operations, signal processing, and cryptography.
- **Scalability:** Barrel shifters can be easily scaled to accommodate different data widths (8, 16, 32, 64 bits, etc.), making them versatile and adaptable to a wide range of applications.
- **Low Latency:** The operation of a barrel shifter requires only one clock cycle to complete the shifting or rotation operation, which is crucial for time-sensitive applications where minimizing latency is important.

- **Simplifies Complex Bit Manipulations:** Barrel shifters simplify complex bitwise manipulations, such as multiplying or dividing by powers of two, or performing circular shifts, all of which can be done efficiently without requiring additional logic.

Disadvantages

- **Increased Hardware Complexity:** The use of multiplexers in a barrel shifter increases the hardware complexity compared to simpler shift registers. For large data widths, the number of multiplexers required can grow significantly, leading to increased area and power consumption.
- **Limited to Shifting and Rotations:** While barrel shifters are highly efficient for shifting and rotating data, they do not natively support other operations such as arithmetic shifts (which involve sign extension) without additional logic.
- **Higher Power Consumption for Larger Configurations:** Although efficient, the need for multiple multiplexers and control lines in large-scale barrel shifters (e.g., for 64-bit or wider data) can lead to higher power consumption, especially in systems that frequently perform shift operations.
- **Control Complexity:** As the bit-width of the data increases, the control logic for selecting the appropriate bits from the input data becomes more complex. This may lead to challenges in managing timing and synchronization, especially in very large or high-speed systems.
- **Area Overhead:** Barrel shifters, especially for larger bit-widths, require a significant amount of hardware, potentially leading to increased chip area or circuit footprint. This can be a limitation in applications where space is constrained, such as in embedded systems.

9 Synthesis Design

Team Alpha

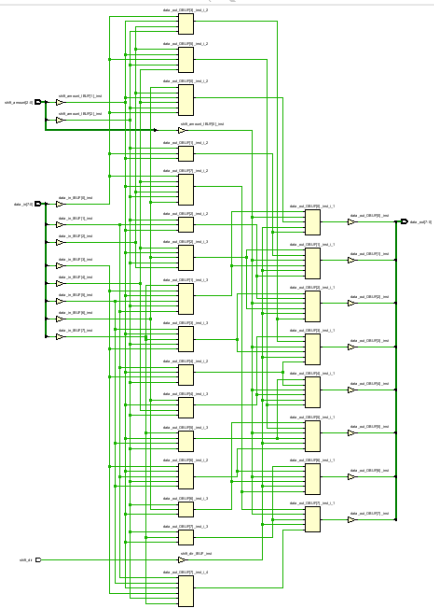

Figure 3: Synthesis of Barrel Shifter

10 Conclusion

Barrel shifters are a crucial component in modern digital systems, offering high-speed and efficient shifting or rotating of binary data. Their ability to perform shifts or rotations in a single clock cycle, using parallel multiplexing, makes them an ideal choice for applications requiring fast data manipulation, such as in processors, digital signal processing, and arithmetic logic units.

The main advantages of barrel shifters include reduced latency, scalability, and simplified complex bitwise operations, which are essential for high-performance computing. However, they come with trade-offs in terms of hardware complexity, increased power consumption, and the need for more sophisticated control logic as the bit-width of data increases.

Despite these disadvantages, the barrel shifter remains a powerful tool in digital system design, enabling efficient operations that are crucial for both general-purpose and specialized processing tasks. Its role in accelerating tasks like multiplication, division, and bitwise manipulation ensures that barrel shifters will continue to be a key component in the architecture of high-speed digital circuits.

11 FAQ for Barrel Shifter

1. **What is a barrel shifter?** A barrel shifter is a combinational circuit used to shift or rotate binary data by a specified number of positions, either to the left or right, in a single clock cycle. It is widely used in processors and digital systems for high-speed bit manipulation.

2. **What are the main applications of a barrel shifter?** Barrel shifters are commonly used in:
   - Digital signal processing (DSP).
   - Arithmetic operations (multiplication, division by powers of two).
   - Bitwise operations in processors and ALUs.
   - Cryptography and error correction algorithms.
   - Graphics processing (e.g., for image manipulation).

3. **How does a barrel shifter differ from a regular shift register?** A barrel shifter allows data to be shifted or rotated in a single clock cycle using parallel multiplexers, while a regular shift register requires multiple clock cycles to perform the same operation, making the barrel shifter faster and more efficient for large data widths.

4. **Can a barrel shifter perform rotations?** Yes, a barrel shifter can perform both shifts (where data is moved and zero-filled) and rotations (where bits shifted out from one end are re-inserted at the other end), making it more versatile than basic shift registers.

5. **What is the advantage of a barrel shifter over other shifting methods?** The main advantage is its ability to shift or rotate data in parallel, allowing the operation to be completed in a single clock cycle. This reduces latency and improves performance, especially in high-speed applications.

6. **What are the limitations of a barrel shifter?** Some limitations include:
   - Increased hardware complexity, especially for large bit-widths.
   - Higher power consumption for wide data operations.
   - Limited to shifting and rotating; more complex operations like arithmetic shifts (with sign extension) require additional logic.

7. **How is the shift amount determined in a barrel shifter?** The shift amount is typically specified by a control signal, usually a binary number, which tells the multiplexers how many positions to shift the data.

8. **Can a barrel shifter handle both left and right shifts?** Yes, barrel shifters can perform both left and right shifts, depending on the control signals. Some designs also allow for circular shifts or rotations in both directions.

9. **How does the barrel shifter affect the overall speed of a processor?** By enabling fast shifting and rotation operations in one clock cycle, the barrel shifter significantly improves the speed of arithmetic and logical operations in processors, making it essential for high-performance computing tasks.

10. **Is a barrel shifter useful in cryptographic applications?** Yes, barrel shifters are often used in cryptographic algorithms, where bitwise shifts and rotations are frequent operations for encryption, decryption, and hash functions.

Created by Team Alpha