Casualty Manipulation Simulation Framework for Evaluating Human Biomechanical Responses to Robot Motion

Bijay Gaudel Aldrin Padua Long Wang
Stevens Institute of Technology
Department of Mechanical Engineering
bgaudel@stevens.edu, apadua@stevens.edu, lwang4@stevens.edu

STEVENS INSTITUTE OF TECHNOLOGY 1870
Schaefer School of Engineering and Science
Department of Mechanical Engineering

Abstract

Human casualty manipulation is a critical robotics problem because safe transport, lifting, and repositioning demand precise motion under uncertainty while minimizing additional injury risk. In this work, we target that need with a simulation-first pipeline for interaction-aware control and evaluation. We implement a resolved-rate algorithm to regulate motion updates during contact-rich manipulation so the system can respond consistently to task geometry and interaction changes. The scope of this poster is the implemented Gazebo + ROS 2 + teleoperation + haptic environment and the resolve-rate-driven workflow used for reproducible casualty-manipulation studies.

Key Simulation Features

- Mobile manipulator with a realistic human model for joint force-torque studies.
- Human model with constrained joint limits and force-torque sensors on each joint.
- Plug-and-play 2D human pose estimation integration with EKF refinement for stable poses.
- Haptic-device-based casualty manipulation pipeline with the resolved-rate algorithm.
- Implemented in Gazebo Harmonic and ROS 2 on Ubuntu 24.04.

Resolve Rate Algorithm

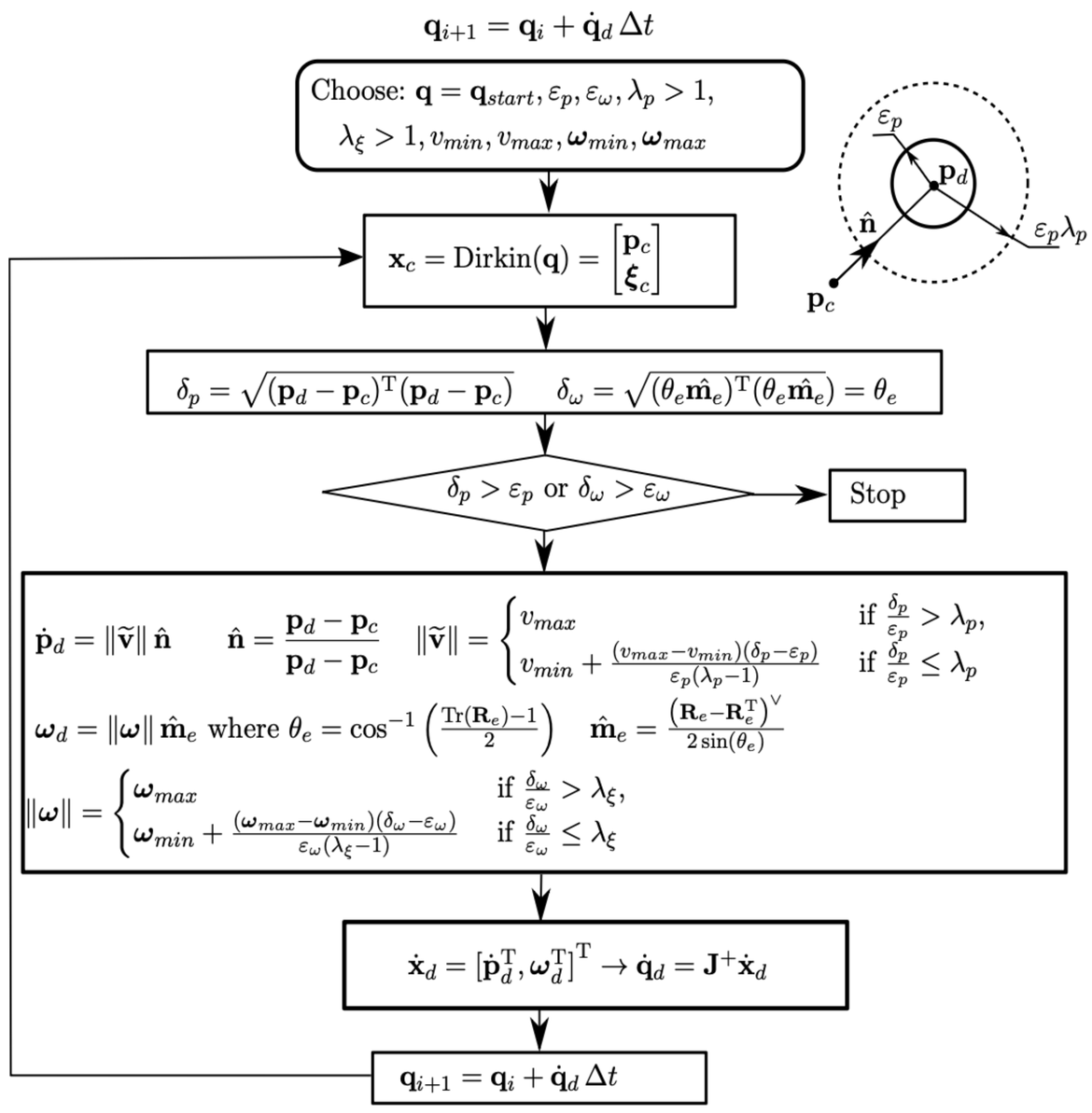

Figure: An implementation of the resolved-rate algorithm with radii of convergence for position and orientation errors ε_p, ε_ω, and with linear speed decay when the errors $\delta_p < \lambda_p \varepsilon_p$, $\delta_\omega < \lambda_\xi \varepsilon_\omega$, where $\lambda_p, \lambda_\xi > 1$ and the operator $(S)^\vee$ extracts the vector of a skew-symmetric matrix S.

2D Human Pose Estimation

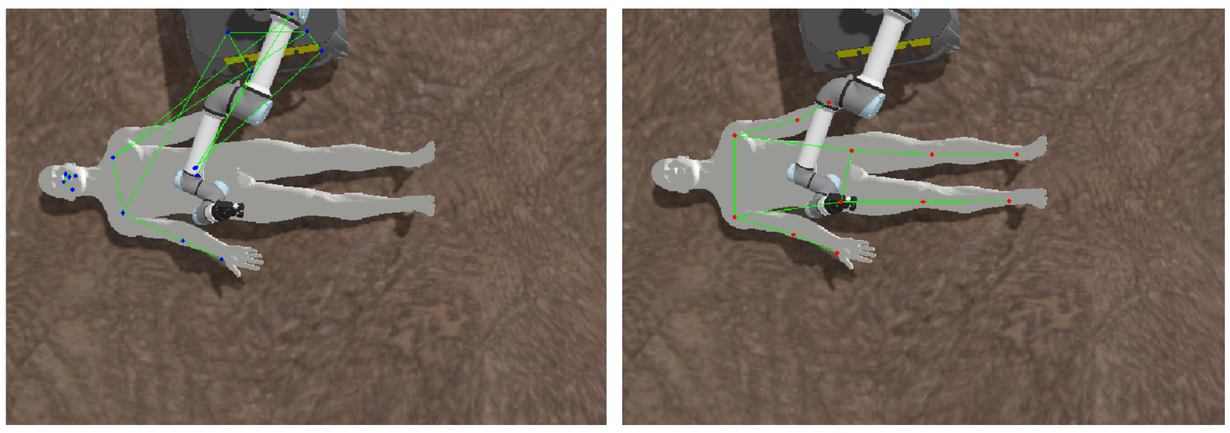

Figure: Human pose estimation during manipulation using ViTPose and human pose estimation after correction using EKF.

Simulation Setup

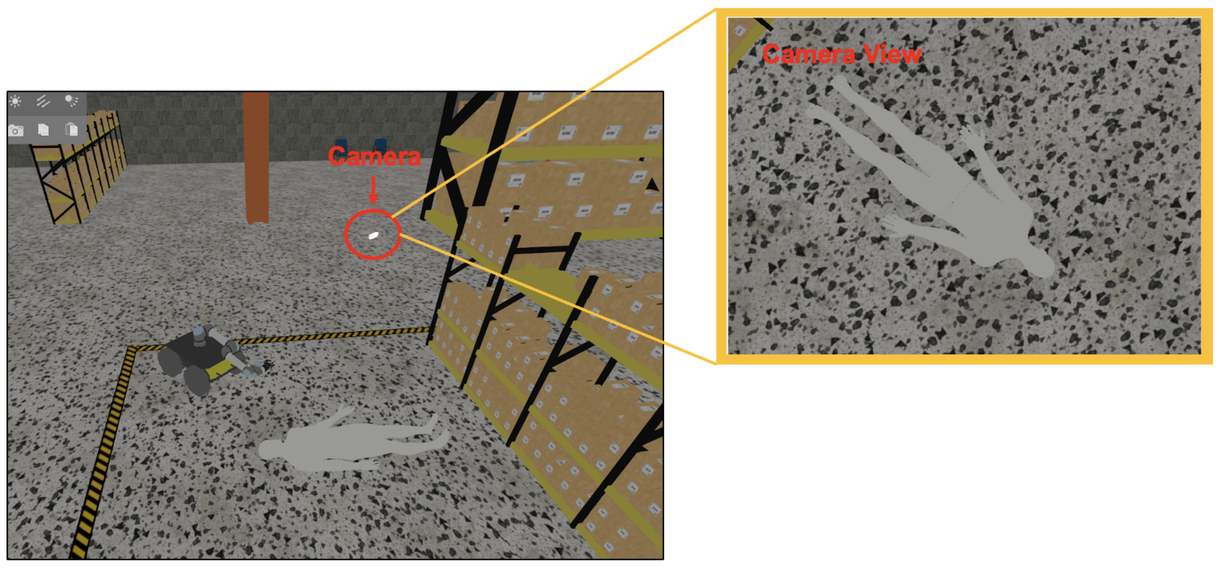

Figure: Gazebo simulation setup for casualty manipulation with camera setup

Haptic and Robot Base Frames

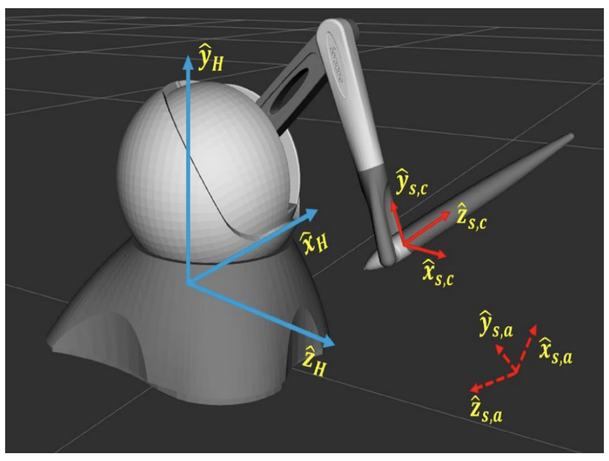

Figure: Haptic interaction frame

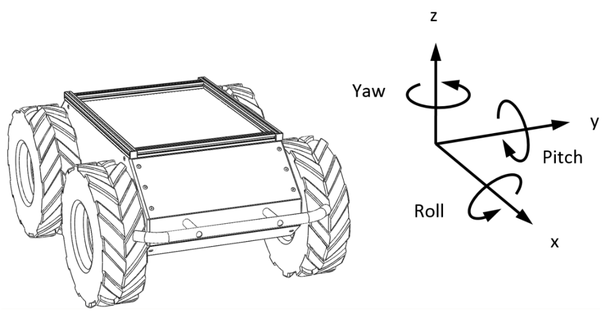

Figure: Robot base frame

$$^{V}R_H = \begin{bmatrix} 1 & 0 & 0 \\ 0 & 0 & -1 \\ 0 & 1 & 0 \end{bmatrix} \quad \text{(haptic frame expressed in viewer frame)}$$

$$^{V}R_B = \begin{bmatrix} 0 & -1 & 0 \\ 1 & 0 & 0 \\ 0 & 0 & 1 \end{bmatrix} \quad \text{(robot-base frame expressed in viewer frame)}$$

$$T_A^V = T_H^V T_A^H, \qquad T_A^{\mathrm{tcp0}} = (T_{\mathrm{tcp0}}^B)^{-1}(T_B^V)^{-1} T_A^V$$

Frames: V = viewer, H = haptic, B = robot base, A = anchor.

Casualty Manipulation Snapshot

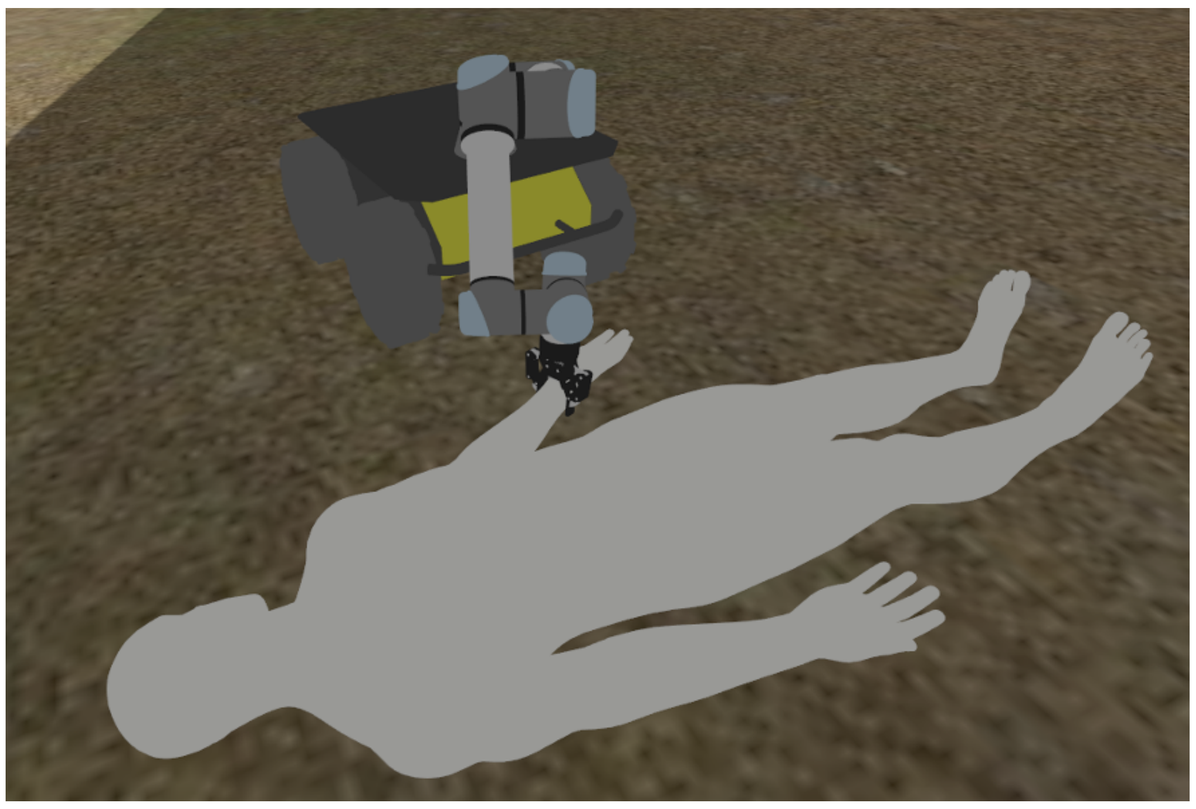

Figure: Casualty manipulation snapshot using haptic device teleoperation.

Future Work

- **Joint-Angle-Centric Perception:** We will model casualty-manipulation perception in human joint-angle state space for native joint-injury reasoning and to avoid conversion from point-cloud/keypoint outputs before joint-level safety evaluation.
- **Interaction-Aware Observer:** We will develop joint-angle estimation as an interaction-aware observer under external loading, allowing the estimator to adapt when robot-human interaction should influence the state update, for safer whole-body manipulation decisions.