Chinese Journal of Electronics
Vol.21, No.3, July 2012

RNS-to-Binary Converter for New Four-Moduli Set $\{2^n-1, 2^n, 2^{n+1}-1, 2^{n+1}+2^n-1\}$*

QUAN Si[1], PAN Weitao[2], XIE Yuanbin[3] and HAO Yue[3]

(1.*School of Electronics and Control Engineering, Chang'an University, Xi'an 710064, China*)

(2.*State Key Laboratory of Integrated Service Networks, Xidian University, Xi'an 710071, China*)

(3.*School of Microelectronics, Xidian University, Xi'an 710071, China*)

Abstract — In this paper, a new four-moduli set $\{2^n-1, 2^n, 2^{n+1}-1, 2^{n+1}+2^n-1\}$ is proposed. The new moduli set choice because of a fast modulo $2^{n+1}+2^n-1$ adder has been proposed in literature. In order to work out the reverse converter for this moduli set, we introduce the technique for modulo $2^{n+1}+2^n-1$ of a negative number and modulo $2^{n+1}+2^n-1$ multiplication of a residue number by 2 and design a multi-operand modulo $2^{n+1}+2^n-1$ adder. The proposed reverse converter based on mixed radix conversion and does not require any ROM. The comparisons for conversion time as well as area requirements between our reverse converter and the reverse converters for several other four-moduli sets are presented.

Key words — Mixed radix conversion (MRC), Residue number system (RNS), RNS-to-binary converter.

I. Introduction

Residue number system (RNS) is a non-weighted number system. In an RNS, numerous binary numbers are decomposed into several small residues. Hence, arithmetic operations in RNS, such as addition, subtraction and multiplication, are performed on each residue separately and synchronously, which leads to high-speed arithmetic operations[1,2].

The most important thing in RNS is the moduli set choice which determines the dynamic range and balance characteristic of the RNS and impacts performance and hardware complexity in the implementation of RNS system. In recent years, many four-moduli sets have been introduced to extend the dynamic range of RNS. Some of these four-moduli sets are $\{2^n-1, 2^n, 2^n+1, 2^{n+1}-1\}$[3−5], $\{2^n-1, 2^n, 2^n+1, 2^{n+1}+1\}$[4,6], $\{2^n-1, 2^n, 2^n+1, 2^{n1}-1\}$[5] and $\{2^n-1, 2^n, 2^n+1, 2^{2n}+1\}$[7].

In this paper, a new four-moduli set $\{2^n-1, 2^n, 2^{n+1}-1, 2^{n+1}+2^n-1\}$ is introduced. The moduli $2^{n+1}+2^n-1$ is obtained from Ref.[8] where the authors proposed a fast modulo $2^{n+1}+2^n-1$ adder architecture. The proposed moduli set has two moduli of n-bit word length, one moduli have $(n+1)$-bit and one has $(n+2)$-bit word length. In addition, the moduli set is applicable for either odd or even n since all the moduli are mutually prime. Next, we present an efficient design of the residue to binary converter for the moduli set $\{2^n-1, 2^n, 2^{n+1}-1, 2^{n+1}+2^n-1\}$ based on Mixed-radix conversion (MRC) algorithm.

II. RNS-to-Binary Converter for Four-Moduli Set $\{2^n-1, 2^n, 2^{n+1}-1, 2^{n+1}+2^n-1\}$

It should be proved that these moduli form $\{2^n-1, 2^n, 2^{n+1}-1, 2^{n+1}+2^n-1\}$ are pair-wise relative prime for the validity of the RNS before designing the reverse converter for this moduli set.

Theorem 1 For natural number a and b, if a is relatively prime to b, then $(a+b)$ is relatively prime to each of a and b.

Proof Assume that $(a+b)$ is not prime to a, there at least exists a common divisor d of them, where d is a natural number and $d \neq 1$. So we have $a+b=md$ and $a=kd$, where m and k are natural numbers. Thus, we have $(a+b)-a=md-kd \Rightarrow b=(m-k)d$. So d is a common divisor of a and b, which is in contradiction with that a is relatively prime to b. Thus, $(a+b)$ is relatively prime to a. In the same way, $(a+b)$ is relatively prime to b. Therefore, theorem 1 is valid.

Theorem 2 2^m-1 is relatively prime to 2^k, where m and k are natural numbers.

Proof It is obvious that 2 is the only prime divisor of 2^k and 2^m-1 is an odd. Thus, there is no any common divisor of them. So 2^m-1 is relatively prime to 2^k.

Theorem 3 $2^{n+1}-1$ is relatively prime to 2^n-1, where n is a natural number.

Proof Assume that $2^{n+1}-1$ is not prime to 2^n-1, there at least exists a common divisor d of them, where d is a natural number and $d \neq 1$. So we have $2^{n+1}-1=kd$, $2^n-1=md$, where m and k are natural numbers. Thus, we have $(2^{n+1}-1)-2\times(2^n-1)=kd-2md \Rightarrow (k-2m)d=1 \Rightarrow k-2m=1$ and $d=1$. This is in contradiction with $d \neq 1$. Hence, the assumption that $2^{n+1}-1$ is not prime to 2^n-1 is invalid. So $2^{n+1}-1$ is relatively prime to 2^n-1.

*Manuscript Received Sept. 2010; Accepted Nov. 2011. This work is supported by the Fundamental Research Funds for the Central Universities (No.K50511010017).

Theorem 4 The moduli from the four-moduli set $\{2^n-1, 2^n, 2^{n+1}-1, 2^{n+1}+2^n-1\}$ are pair-wise relatively prime for any natural number n.

Proof By theorem 2 and theorem 3, the moduli 2^n-1, $2^{n+1}-1$ and 2^n are pair-wise relatively prime. It is derived from theorem 1 that moduli $2^{n+1}+2^n-1$ is relatively prime to each of $2^{n+1}-1$ and 2^n, since $2^{n+1}+2^n-1$ can be seen as $(2^{n+1}-1)+2^n$. Moreover, $2^{n+1}+2^n-1$ can also be seen as $2^{n+1}+(2^n-1)$ and 2^n-1 is relatively prime to 2^{n+1} by theorem 2, thus according to theorem 1, $2^{n+1}+2^n-1$ is relatively prime to 2^n-1. Therefore, these moduli from the four-moduli set $\{2^n-1, 2^n, 2^{n+1}-1, 2^{n+1}+2^n-1\}$ are pair-wise relative prime.

We next consider the use of MRC for deriving the RNS-to-binary conversion algorithm of moduli set $\{2^n-1, 2^n, 2^{n+1}-1, 2^{n+1}+2^n-1\}$.

Assume that $p_1=2^n$, $p_2=2^{n+1}+2^n-1$, $p_3=2^n-1$ and $p_4=2^{n+1}-1$. The residues corresponding to p_1, p_2, p_3, and p_4 are x_1, x_2, x_3 and x_4. The six multiplicative inverses k_1, k_2, k_3, k_4, k_5 and k_6 are needed in the converter. They are given as follows:

$$k_1 = |p_1^{-1}|_{p_2} = 2^{n+3}+2^n \tag{1a}$$
$$k_2 = |p_1^{-1}|_{p_3} = 1 \tag{1b}$$
$$k_3 = |p_2^{-1}|_{p_3} = 2^{n-1} \tag{1c}$$
$$k_4 = |p_1^{-1}|_{p_4} = 2 \tag{1d}$$
$$k_5 = |p_2^{-1}|_{p_4} = 2 \tag{1e}$$
$$k_6 = |p_3^{-1}|_{p_4} = -2 \tag{1f}$$

Based on MRC, the binary number X can be calculated from the residues (x_1, x_2, x_3, x_4) corresponding to moduli set (p_1, p_2, p_3, p_4) by

$$X = a_1 + a_2p_1 + a_3p_2p_1 + a_4p_3p_2p_1 \tag{2}$$

where a_i is the mixed radix digit. Since the n Least significant bits (LSBs) of X are given by $a_1=x_1$, it just needs to compute the $(3n+3)$ Most significant bits (MSBs) of X. We use X_H to denote $(3n+3)$ MSBs of X, then we have

$$X_H = (X-a_1)/p_1 = a_2 + a_3p_2 + a_4p_3p_2 \tag{3}$$

The conversion procedure needs three steps to compute the mixed radix digits. In the ith step, the mixed radix digit a_{i+1} and several intermediate results are determined. Then it still needs a final step to obtain the binary number X by Eq.(2) and Eq.(3). The four steps of the conversion procedure are described as following:

Step (1) Evaluate $u_1=[(x_2-x_1)k_1] \bmod (2^{n+1}+2^n-1)$, $u_2=[(x_3-x_1)k_2] \bmod (2^n-1)$ and $u_3=[(x_4-x_1)k_4] \bmod (2^{n+1}-1)$. Then the mixed radix digit a_2 is equal to u_1.

Step (2) Evaluate $v_1=[(u_2-u_1)k_3] \bmod (2^n-1)$ and $v_2=[(u_3-u_1)k_5] \bmod (2^{n+1}-1)$. Then the mixed radix digit a_3 is equal to v_1.

Step (3) Evaluate $w_1=[(v_2-v_1)k_6] \bmod (2^{n+1}-1)$, then $a_4=w_1$.

Step (4) Finally, the $(3n+3)$ MSBs X_H of X can be obtained by Eq.(3). Appending to n-bit word x_1 as LSBs yields the binary number X. We will simplify the Eq.(3) later such that it merely needs two-level $(3n+3)$-bit Carry-save adders (CSA) followed by a $(3n+3)$-bit CPA to obtain X_H.

For the hardware realization of the RNS-to binary converter, one modulo $2^{n+1}+2^n-1$ adder, two modulo 2^n-1 adders, three modulo $2^{n+1}-1$ adders and some other hardware cells are need to evaluate a_2, a_3 and a_4. Then two-level $(3n+3)$-bit CSA followed by a $(3n+3)$-bit CPA are employed to compute X_H. Finally, obtaining X by joining X_H and x_1 does not result in additional hardware cost.

III. Hardware Realization of Reverse Converter

In order to obtain a_2, a_3 and a_4 to compute Eq.(3), we need to evaluate u_1, u_2, u_3, v_1, v_2 and w_1 in step (1), (2) and (3) first, then $a_2=u_1$, $a_3=v_1$ and $a_4=w_1$.

1. Evaluation of u_1

Since $k_1=2^{n+3}+2^n=3(2^{n+1}+2^n-1)+3$,

then $u_1=[(x_2-x_1)k_1] \bmod (2^{n+1}+2^n-1)$
$=[3(x_2-x_1)] \bmod (2^{n+1}+2^n-1)$,

which can be rewritten as

$$u_1 = |2x_2+x_2-2x_1-x_1|_{2^{n+1}+2^n-1} \tag{4}$$

Next, two techniques are introduced. One is about how to find the residue of $(-Z) \bmod (2^{n+1}+2^n-1)$ and the other is about how to find the residue of $(2\times Z) \bmod (2^{n+1}+2^n-1)$, where Z is in the range $[0, 2^{n+1}+2^n-1]$.

Technique 1 Express Z in bit-level as $Z=(z_{n+1}, z_n, z_{n-1}, \cdots, z_0)_2$, where Z is in the range $[0, 2^{n+1}+2^n-1]$. If $A=(-Z) \bmod (2^{n+1}+2^n-1)$, then each bit a_i in $A=(a_{n+1}, a_n, a_{n-1}, \cdots, a_0)_2$ can be computed as

$$a_i = \begin{cases} \bar{z}_i, & \text{for } i\in[0,n-1] \\ z_n, & \text{for } i=n \\ \bar{z}_{n+1}\cdot\bar{z}_n, & \text{for } i=n+1 \end{cases} \tag{5}$$

And A is also in the range $[0, 2^{n+1}+2^n-1]$.

Technique 2 Express Z in bit-level as $Z=(z_{n+1}, z_n, z_{n-1}, \cdots, z_0)_2$, where Z is in the range $[0, 2^{n+1}+2^n-1]$. If $A=(2\times Z) \bmod (2^{n+1}+2^n-1)$, then each bit a_i in $A=(a_{n+1}, a_n, a_{n-1}, \cdots, a_0)_2$ can be computed as

$$a_i = \begin{cases} z_{n+1}+z_nz_{n-1}, & \text{for } i=0 \\ z_{i-1}, & \text{for } i\in[1,n-1] \\ z_{n-1}\oplus a_0, & \text{for } i=n \\ z_n\oplus(z_{n-1}a_0), & \text{for } i=n+1 \end{cases} \tag{6}$$

And A is also in the range $[0, 2^{n+1}+2^n-1]$.

By now, in evaluating u_1 by Eq.(4), we can obtain the residues of $(-x_1)$ and $(-2x_1) \bmod (2^{n+1}+2^n-1)$ by technique 1, since both x_1 and $2x_1$ are in the range $[0, 2^{n+1}+2^n-1]$, and can obtain the residue of $(2x_2) \bmod (2^{n+1}+2^n-1)$ by technique 2. Hence, evaluating u_1 can be regarded as four operands modulo $2^{n+1}+2^n-1$ addition. One operand is x_2, the other three operands are the residues of $2x_2$, $(-x_1)$ and $(-2x_1) \bmod (2^{n+1}+2^n-1)$.

We consider three-operand modulo addition $(Q+R+T) \bmod (2^{n+1}+2^n-1)$, where Q, R and T are in the range $[0, 2^{n+1}+2^n-1]$. Our purpose is to convert $(Q+R+T) \bmod (2^{n+1}+2^n-1)$ to two-operand modulo addition $(A+B) \bmod (2^{n+1}+2^n-1)$, where $(A+B) \bmod (2^{n+1}+2^n-1)=(Q+R+T)$

mod $(2^{n+1}+2^n-1)$ and both A and B are also in the range $[0, 2^{n+1}+2^n-1]$.

For this purpose, first, we use a $(n+2)$-bit CSA to obtain $(n+2)$ sum bits S and $(n+3)$ carry bits C of the addition of $Q+R+T$. However, it is obvious that S and C can not be regarded as two inputs of two-operand modulo $2^{n+1}+2^n-1$ adder, since both S and C are not in the range $[0, 2^{n+1}+2^n-1]$. Some corrections should be made to each S and C to obtain A and B, *i.e.* $A=f_a(S,C)$ and $B=f_b(S,C)$, so that both A and B are in the range $[0, 2^{n+1}+2^n-1]$ and $(A+B)$ mod $(2^{n+1}+2^n-1)=(S+C)$ mod $(2^{n+1}+2^n-1)$. Then A and B can be regarded as two inputs of two-operand modulo $2^{n+1}+2^n-1$ adder and $(A+B)$ mod $(2^{n+1}+2^n-1)=(Q+R+T)$ mod $(2^{n+1}+2^n-1)$ (since $S+C=Q+R+T$).

Let Q,R,T,S and C be represented by bit-level as $Q=(q_{n+1},q_n,\cdots,q_0)_2$, $R=(r_{n+1},r_n,\cdots,r_0)_2$, $T=(t_{n+1},t_n,\cdots,t_0)_2$, $S=(s_{n+1},s_n,\cdots,s_0)_2$ and $C=(c_{n+2},c_{n+1},c_n,\cdots,c_0)_2$. Then S and C can be obtained by

$$s_i=q_i\oplus r_i\oplus t_i \quad \text{and}$$
$$c_i=\begin{cases}0, & \text{for } i=0\\ q_{i-1}r_{i-1}+q_{i-1}t_{i-1}+r_{i-1}t_{i1}, & \text{otherwise}\end{cases} \tag{7}$$

Therefore, each bit a_i in $A=(a_{n+1},a_n,\cdots,a_0)_2$ and b_i in $B=(b_{n+1},b_n,\cdots,b_0)_2$ can be computed as

$$a_i=\begin{cases}s_i, & \text{for } i\in[0,n-1]\\ s_n\oplus(s_{n+1}s_n), & \text{for } i=n\\ s_{n+1}\oplus(s_{n+1}s_n), & \text{for } i=n+1\end{cases} \tag{8a}$$

$$b_i=\begin{cases}c_{n+2}+c_{n+1}c_n+s_{n+1}s_n, & \text{for } i=0\\ c_i, & \text{for } i\in[1,n-1]\\ c_n\oplus(c_{n+2}+c_{n+1}c_n), & \text{for } i=n\\ c_{n+1}\oplus[c_n(c_{n+2}+c_{n+1}c_n)], & \text{for } i=n+1\end{cases} \tag{8b}$$

For example, let $n=3$, $Q=22=(10110)_2$, $R=21=(10101)_2$, and $T=20=(10100)_2$. Then $S=(10111)_2$ and $C=(101000)_2$. By Eqs.(8a) and (8b), we can obtain $A=(10111)_2=23$ and $B=(10001)_2=17$ that can be verified by $|23+17|_{23}=|22+21+20|_{23}=17$. Fig.1 illustrates the hardware implementation of modulo $2^{n+1}+2^n-1$ CSA.

Finally, a modulo $2^{n+1}+2^n-1$ adder is needed to obtain u_1. It is well known that modulo 2^n-1 adder can be realized by n-bit Carry propagate adder (CPA) with End around carry (EAC). The modulo $2^{n+1}+2^n-1$ adder can also be realized by a similar architecture which is shown in Fig.2.

The proposed modulo $2^{n+1}+2^n-1$ adder can work due to the modular $2^{n+1}+2^n-1$ addition of A and B can be formulated as

$$S=\begin{cases}A+B, & \text{for } A+B\le 2^{n+1}+2^n-1\\ A+B-(2^{n+1}+2^n-1), & \text{for } A+B>2^{n+1}+2^n-1\end{cases} \tag{9}$$

where all of A,B and S are $(n+2)$-bit numbers in the range $[0, 2^{n+1}+2^n-1]$.

We use s'_{n+2} and s'_{n+1} to denote the two MSBs of the sum of A and B and denote the carry-out bit and carry-in bit as c_{out} and c_{in} respectively. If $c_{out}+s'_{n+2}s'_{n+1}=0$, it indicates that $A+B\le 2^{n+1}+2^n-1$. In this case, we have $c_{in}=c_{out}+s'_{n+2}s'_{n+1}=0$ (see Fig.2), which will not impact the sum of $A+B$, resulting in $S=A+B$. If $c_{out}+s'_{n+2}s'_{n+1}=1$, it indicates that $A+B>2^{n+1}+2^n-1$. In this case, we have $c_{in}=c_{out}+s'_{n+2}s'_{n+1}=1$, leading to $S=[A+B+(2^n+1)]$ mod 2^{n+2} (see Fig.2) which is equal to subtracting $(2^{n+1}+2^n-1)$ from $A+B$, since 2^n+1 is the $(n+2)$-bit complement code of $2^{n+1}+2^n-1$.

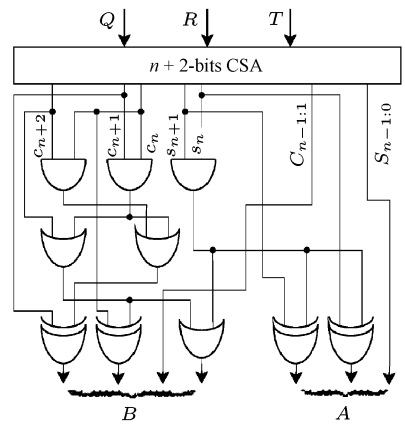

Fig. 1. Structure of modulo $2^{n+1}+2^n-1$ CSA

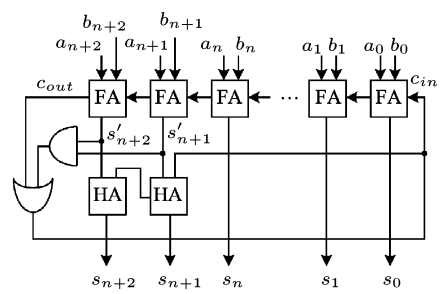

Fig. 2. Structure of modulo $2^{n+1}+2^n-1$ adder

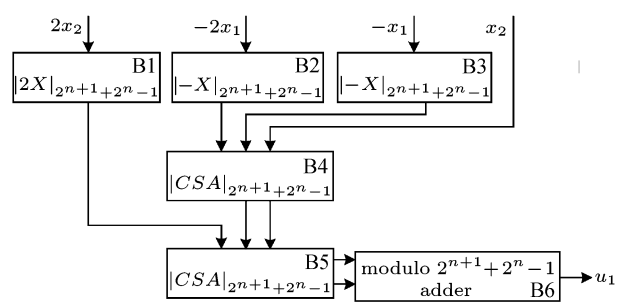

Fig. 3. Hardware structure of evaluating u_1

Fig.3 shows the architecture of evaluating u_1. In Fig.3, block B1 is realized by technique 2 while B2 and B3 are realized by Technique 1, block B4 and B5 are modulo $2^{n+1}+2^n-1$ CSAs and block B6 is modulo $2^{n+1}+2^n-1$ adder.

2. Evaluation of u_2,u_3,v_1,v_2 and w_1

Since all of u_2, u_3, v_1, v_2 and w_1 are results of modulo 2^k-1 addition, evaluating these values is not so hard as u_1. The below two well known properties are useful for computing these values.

Property 1 Modulo (2^k-1) multiplication of a residue

number x by 2^m, where $0 < x \leq 2^k - 1$, is equivalent to express x in a k bits binary representation and then circularly left shift it by m bits.

Property 2 Modulo $(2^k - 1)$ of a negative number $-x$, where $0 < x \leq 2^k - 1$, is equivalent to taking the one's complement of the number x.

However, there are some slight difference in the evaluation of $v_1 = [(u_2 - u_1)k_3] \bmod (2^n - 1)$ and $v_2 = [(u_3 - u_1)k_5] \bmod (2^{n+1} - 1)$. Note that u_1 is $(n+2)$-bit number while moduli $(2^n - 1)$ is n-bit width and moduli $(2^{n+1} - 1)$ is $(n+1)$-bit width. Therefore, u_1 needs to be divided as two n-bit fields g_1 and g_2 in evaluation of v_1 or two $(n+1)$-bit fields h_1 and h_2 in evaluation of v_2, where $u_1 = g_2 2^n + g_1$ and $u_1 = h_2 2^{n+1} + h_1$. Then v_1 can be computed as $v_1 = [(u_2 + g_1 + g_2)2^{n-1}] \bmod (2^n - 1)$, where g_1 and g_2 are one's complement of g_1 and g_2 respectively, v_2 can be computed as $v_2 = [(u_2 + \bar{h}_1 + \bar{h}_2)2] \bmod (2^{n+1} - 1)$, where $\bar{h}_1$ and $\bar{h}_2$ are one's complement of h_1 and h_2 respectively. Thus, evaluating v_1 or v_2 needs a CSA with EAC followed by modulo $2^k - 1$ adder.

3. Evaluation of X_H

We next consider computing X_H using Eq.(3) where $X_H = a_2 + a_3 p_2 + a_4 p_3 p_2$. The values of a_2, a_3 and a_4 can be determined by $a_2 = u_1$, $a_3 = v_1$ and $a_4 = w_1$. The word length of a_2, a_3 and a_4 are $(n+2)$-bit, n-bit and $(n+1)$-bit respectively. Note that $p_2 = 2^{n+1} + 2^n - 1$ can be written as $p_2 = 2^{n+2} - 2^n - 1$, so X_H can be computed as follows

$$\begin{aligned} X_H =& a_2 + a_3(2^{n+2} - 2^n - 1) + a_4(2^n - 1)(2^{n+2} - 2^n - 1) \\ =& (a_4 2^{2n+2} + a_3 2^{n+2} + a_2) - (a_4 2^{2n} + a_3 2^n + a_3) \\ & - a_4 2^{n+2} + a_4 \end{aligned} \tag{10}$$

The expression $a_4 2^{2n+2} + a_3 2^{n+2} + a_2$ indicates that we can combine a_2, a_3 and a_4 to make a single $(3n+3)$-bit number X_{H1}, where a_2 is the $n+2$ LSBs of X_{H1}, a_3 is the middle n-bit field of X_{H1} and a_4 is the $n+1$ MSBs of X_{H1}. Similar, we can join a_3 and a_4 to make a single $(3n+1)$-bits number X_{H2} by expression $a_4 2^{2n} + a_3 2^n + a_3$, where the n LSBs of X_{H2} is a_3, the middle n-bit field of X_{H2} also is a_3 and the $n+1$ MSBs of X_{H2} is a_4. So evaluating X_H can be seen as four-operand arithmetic operation:

$$X_H = X_{H1} - X_{H2} - X_{H3} + X_{H4} \tag{11}$$

where $X_{H1} = a_4 2^{2n+2} + a_3 2^{n+2} + a_2$, $X_{H2} = a_4 2^{2n} + a_3 2^n + a_3$, $X_{H3} = a_4 2^{n+2}$ and $X_{H4} = a_4$.

Since X_H is a $(3n+3)$-bit number, then we have

$$\begin{aligned} X_H =& X_H \bmod 2^{3n+3} \\ =& (X_{H1} - X_{H2} - X_{H3} + X_{H4}) \bmod 2^{3n+3} \\ =& X_{H1} + (2^{3n+3} - 1 - X_{H2}) + (2^{3n+3} - 1 - X_{H3}) \\ & + X_{H4} + 2] \bmod 2^{3n+3} \\ =& (X_{H1} + \bar{X}_{H2} + \bar{X}_{H3} + X_{H4} + 2) \bmod 2^{3n+3} \end{aligned}$$

where $\bar{X}_{H2}$ and $\bar{X}_{H3}$ are one's complements of X_{H2} and X_{H3} with respect to $2^{3n+3} - 1$. Thus, X_H can be obtained by taking the $3n+3$ LSBs of the result of $(X_{H1} + \bar{X}_{H2} + \bar{X}_{H3} + X_{H4} + 2)$. Using a $(3n+3)$-bit CSA to perform addition of $(X_{H1} + \bar{X}_{H2} + \bar{X}_{H3})$ can obtain $3n+3$ sum bits S_1 and $3n+4$ carry bits C_1, where a LSB of C_1 is always 0. Then we replace the LSB of C_1 with 1, which is equivalent to the addition of $(X_{H1} + \bar{X}_{H2} + \bar{X}_{H3} + 1)$. In the same way, we use the second $(3n+3)$-bit CSA to compute addition of $(S_1 + C_1 + X_{H4} + 1)$ (The MSB of C_1 is ignored, since we just care the $3n+3$ LSBs of result). Then we obtain sum bits S_2 and carry bits C_2 from the second CSA. Finally, using a $(3n+3)$-bit CPA, we can obtain the $3n+3$ LSBs of the result of $(S_2 + C_2)$ as X_H.

Joining X_H and x_1 as the $3n+3$ MSBs and n LSBs respectively yields the binary number X.

The architecture of our reverse converter for the four-moduli set $\{2^n-1, 2^n, 2^{n+1}-1, 2^{n+1}+2^n-1\}$ is presented in Fig.4. The detail of block M1 is presented in Fig.3.

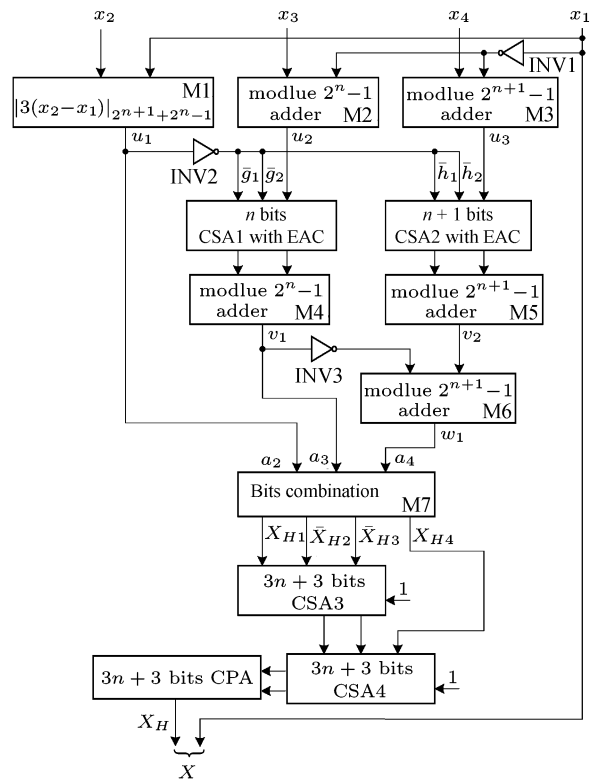

Fig. 4. Architecture of reverse converter for the moduli set $\{2^n-1, 2^n, 2^{n+1}-1, 2^{n+1}+2^n-1\}$

IV. Performance Evaluation

The proposed four-moduli set $\{2^n-1, 2^n, 2^{n+1}-1, 2^{n+1}+2^n-1\}$ has $4n+2$ bits dynamic range with balanced moduli. And hardware implementation for the proposed four-moduli set is ROM free. Therefore, we compare ours with the other ROM free reverse converters for four-moduli sets which have similar dynamic range with balanced moduli. Such four-moduli sets are moduli set $\{2^n-1, 2^n, 2^n+1, 2^{n+1}-1\}$, $\{2^n-1, 2^n, 2^n+1, 2^{n+1}+1\}$ and $\{2^n-1, 2^n, 2^n+1, 2^{n-1}1\}$. And the ROM free reverse converters for these four-moduli sets can be found in Refs.[3-5]. Both n-bit modulo adder and n-bits CPA are realized using n full-adders in the reverse converters of Refs.[3] and [4], thus we adopt CE version reverse converters in which n-bits CPA are also realized using n full-adders of Ref.[5] to be compared with. Except for the reverse converter of Ref.[3], all of other reverse converters employ a

k-levels CSA tree, where k increases with the increase of n, resulting in high area complexity when n is large. For our converter, the hardware cost of $9n+6$ inverters is equivalent to n FAs. Therefore, the hardware of our converter is equivalent to $20n+23$ FAs. The delay of two XOR-gates or four two-input monotonic gate (*e.g.*, AND-gate or OR-gate) is equivalent to one FA. Hence, the delay of our converter is approximately equivalent to $9n+20t_{FA}$. The comparisons between our reverse converter and the other converters are shown in Table 1.

Table 1. Area and conversion time comparison of reverse converters for various four moduli sets

Converter	Moduli set	Area	Delay
Ref.[15]	$\{2^n-1, 2^n, 2^n+1, 2^{n+1}-1\}$	$(28n+15)A_{FA}$	$(14n+8)t_{FA}$
Ref.[16]	$\{2^n-1, 2^n, 2^n+1, 2^{n+1}-1\}$	$(n^2/2+15n/2+3)A_{FA}$	$(23n/2+6)t_{FA}$
4-stage in Ref.[17]	$\{2^n-1, 2^n, 2^n+1, 2^{n+1}-1\}$	$(n^2/2+11n+4)A_{FA}$	$(11n+l+8)t_{FA}$
3-stage in Ref.[17]	$\{2^n-1, 2^n, 2^n+1, 2^{n+1}-1\}$	$(n^2+21n/2+3)A_{FA}$	$(9n+m+6)t_{FA}$
Ref.[16]	$\{2^n-1, 2^n, 2^n+1, 2^{n+1}+1\}$	$(n^2+12n+12)A_{FA}$	$(16n+22)t_{FA}$
4-stage in Ref.[17]	$\{2^n-1, 2^n, 2^n+1, 2^{n-1}-1\}$	$(n^2/2+17n/2-3)A_{FA}$	$(11n+l-1)t_{FA}$
3-stage in Ref.[17]	$\{2^n-1, 2^n, 2^n+1, 2^{n-1}-1\}$	$(n^2+7n-2)A_{FA}$	$(9n+m+1)t_{FA}$
ours	$\{2^n-1, 2^n, 2^{n+1}-1, 2^{n+1}+2^n-1\}$	$(20n+19)A_{FA}$	$(9n+20)t_{FA}$

From Table 1, both area and conversion time of our converter are smaller than that of reverse converter for moduli set $\{2^n-1, 2^n, 2^n+1, 2^{n+1}-1\}$ $(n \neq 1, 2)$ in Ref.[3]. The conversion time for our converter is close to the two three-stage version designs of Ref.[5], while the area is less than the three-stage version converter for moduli set $\{2^n-1, 2^n, 2^n+1, 2^{n+1}-1\}$ for $n>10$ and moduli set $\{2^n-1, 2^n, 2^n+1, 2^{n-1}-1\}$ for $n>14$. Our converter is always faster than the two converters of Ref.[4]. The area of our converter is less than the converter of Ref.[4] for moduli set $\{2^n-1, 2^n, 2^n+1, 2^{n+1}-1\}$ for $n>24$ and moduli set for $\{2^n-1, 2^n, 2^n+1, 2^{n+1}+1\}$ for $n>7$. Our converter needs less conversion time than the two four-stage version converters of Ref.[5] for $n>8$. The area of our converter is less than the four-stage version converter for moduli set $\{2^n-1, 2^n, 2^n+1, 2^{n+1}-1\}$ for $n>18$ and moduli set $\{2^n-1, 2^n, 2^n+1, 2^{n+1}-1\}$ for $n>22$.

V. Conclusion

In this paper, a new four-moduli set $\{2^n-1, 2^n, 2^{n+1}-1, 2^{n+1}+2^n-1\}$ has been proposed. This moduli set choice was because of the fact that a fast parallel-prefix modular $2^{n+1}+2^n-1$ adder architecture is available in literature. The new four-moduli set is valid for both odd and even values of n and contains balanced moduli. The reverse converter based on MRC for this moduli set also has been proposed. The area complexity of our reverse converter is $(20n+19)A_{FA}$ and the conversion time is $(9n+20)t_{FA}$. Compared with the converters for the four-moduli set $\{2^n-1, 2^n, 2^n+1, 2^{n+1}-1\}$, $\{2^n-1, 2^n, 2^n+1, 2^{n+1}+1\}$ and $\{2^n-1, 2^n, 2^n+1, 2^{n-1}-1\}$, the proposed reverse converter is more efficient both in hardware cost and conversion time.

References

[1] N.S. Szabo and R.I. Tanaka, *Residue Arithmetic and Its Applications to Computer Technology*, New York: McGraw-Hill, 1967.

[2] M.A. Soderstrand, *et al., Residue Number System Arithmetic: Modern Applications in Digital Signal Processing*, New York: IEEE Press, 1986.

[3] A.P. Vinod and A.B. Premkumar, "A memoryless reverse converter for the 4-moduli superset $\{2^n-1, 2^n, 2^n+1, 2^{n+1}-1\}$", *J. Circuits, Syst., Comput.*, Vol.10, No.1&2, pp.85–99, 2000.

[4] P.V.A. Mohan and A.B. Premkumar, "RNS-to-binary converters for two four-moduli sets $\{2^n-1, 2^n, 2^n+1, 2^{n+1}-1\}$ and $\{2^n-1, 2^n, 2^n+1, 2^{n+1}+1\}$", *IEEE Trans. Circuits Syst. I*, Vol.54, No.6, pp.1245–1254, June 2007.

[5] B. Cao, T. Srikanthan and C.H. Chang, "Efficient reverse converters for four-moduli sets $\{2^n-1, 2^n, 2^n+1, 2^{n+1}-1\}$ and $\{2^n-1, 2^n, 2^n+1, 2^{n1}-1\}$", *IEE Proc. Comput. Digit. Tech.*, Vol.152, No.5, pp.687–696, Sept. 2005.

[6] M. Bhardwaj, T. Srikanthan and C.T. Clarke, "A reverse converter for the 4 moduli super set $\{2^n-1, 2^n, 2^n+1, 2^{n+1}+1\}$", *IEEE Conf. Computer Arithmetic*, Apr. 1999.

[7] B. Cao, *et al.,* "An efficient reverse converter for the 4-moduli set $\{2^n-1, 2^n, 2^n+1, 2^{2n}+1\}$ based on the new Chinese remainder theorem", *IEEE Trans. Circuits Syst. I, Fundam. Theory Appl.*, Vol.50, No.7, pp.1296–1303, July 2003.

[8] R.A. Patel, M. Benaissa and S. Boussakta, "Fast modulo $2^n-(2^{n-2}+1)$ addition: A new class of adder for RNS", *IEEE Trans. Comput.*, Vol.56, No.4, pp.572–576, Apr. 2007.

QUAN Si received B.S. degree from School of Technical Physics of Xidian University in 2006. Her Ph.D. degree was received from School of Microelectronics of Xidian University in 2011. Now she is a lecturer in School of Electronics and Control Engineering of Chang'an University. Her current research interests include semiconductor devices and integrated circuits.

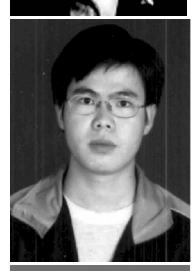

PAN Weitao received B.S. degree from School of Technical Physics of Xidian University in 2004. His Ph.D. degree was received from School of Microelectronics of Xidian University in 2010. Now he is a lecturer in State Key Laboratory of Integrated Service Networks of Xidian University. His current research interests include VLSI design methods and post-silicon verification.

XIE Yuanbin received B.S. degree from School of Technical Physics of Xidian University in 2004. His Ph.D. degree was received from School of Microelectronics of Xidian University in 2011. His current research interests include VLSI design methods.

HAO Yue graduated from Xidian University in 1982, majoring in the specialty of semiconductor physics and devices. Earned his doctorate in computational mathematics from Xi'an Jiaotong University in 1990. He is a senier member of the IEEE, executive director of the Chinese Association of Electronics, chairman of the executive councils of the Shaansi Provincial Association of Electronics, the Trade Association of Integrated Circuits, and the Shaanxi Provincial Semiconductor Illumination Association.