The Residue Number System*

HARVEY L. GARNER†

Summary—**A novel number system called the residue number system is developed from the linear congruence viewpoint. The residue number system is of particular interest because the arithmetic operations of addition, subtraction and multiplication may be executed in the same period of time without the need for carry. The main difficulties of the residue code pertain to the determination of the relative magnitude of two residue representations, and to the division process. A discussion of the arithmetic operations and the conversion process required to convert from a residue code to a weighted code is given. It is concluded that in its present state the residue code is probably not suitable for general purpose computation but is suitable for a special class of control problems. Further research in both components and arithmetic is required if a residue code suitable for general purpose computation is to be obtained.**

Introduction

IN THIS PAPER we develop and investigate the properties of a novel system called the residue code or residue number system. The residue number system is of particular interest because the arithmetic operations of addition and multiplication may be executed in the same time as required for an addition operation. The main difficulty of the residue code relative to arithmetic operations is the determination of the relative magnitude of two numbers expressed in the residue code. The residue code is probably of little utility for general purpose computation, but the code has many characteristics which recommend its use for special purpose computations. The residue code is most easily developed in terms of linear congruences. A brief discussion of the pertinent properties of congruences is presented in the next section.

Congruences

The congruence relationship is expressed as

$$A \equiv \alpha \text{ Mod } b \tag{1}$$

which is read, A is congruent to α Modulo b. The congruence states that the equation

$$A = \alpha + bt \tag{2}$$

is valid for some value of t, where A, α, b and t are integers. α is called the residue and b the base or modulus of the number A.

As examples of congruences consider

$$\begin{aligned} 10 &\equiv 7 \text{ Mod } 3 \\ 10 &\equiv 4 \text{ Mod } 3 \\ 10 &\equiv 1 \text{ Mod } 3. \end{aligned} \tag{3}$$

In these examples the integers 7, 4, and 1 form a residue class of 10 Mod 3. Of particular importance is the least positive residue of the class which in this example is one. The least positive residue is that residue for which $0 \leq \alpha < b$.

Consider the following set of congruences. Given

$$\begin{aligned} A_1 &\equiv \alpha_1 \text{ Mod } b \\ &\vdots \\ A_n &\equiv \alpha_n \text{ Mod } b. \end{aligned} \tag{4}$$

Then:

1) Congruences with respect to the same modulus may be added and the result is a valid congruence.

$$\sum_{i=1}^{n} A_i \equiv \left(\sum_{i=1}^{n} \alpha_i \right) \text{ Mod } b. \tag{5}$$

It follows that terms may be transferred from one side of a congruence to the other by a change of sign and also that congruences may be subtracted and the result is a valid congruence.

2) Congruences with respect to the same modulus may be multiplied and the result is a valid congruence.

$$\prod_{i=1}^{n} A_i \equiv \left(\prod_{i=1}^{n} \alpha_i \right) \text{ Mod } b. \tag{6}$$

It follows that both sides of the congruence may be raised to the same power or multiplied by a constant and the result is a valid congruence.

3) Congruences are transitive. If $A \equiv B$ and $B \equiv C$, then $A \equiv C$.

4) A valid congruence relationship is obtained if the number, the residue and the modulus are divided by a common factor.

5) A valid congruence relationship is obtained if the number and the residue are divided by some common factor relatively prime to the modulus.

The material of this section has presented briefly, without proof, the pertinent concepts of congruences. Additional material on the subject may be found in any standard text on number theory.[1]

* Manuscript received by the PGEC, January 20, 1959; revised manuscript received March 31, 1959. An earlier version of this paper was presented at the 1959 WJCC, San Francisco, Calif.

† Dept. Electrical Engineering, University of Michigan, Ann Arbor, Mich.

[1] G. H. Hardy and E. M. Wright, "An Introduction to the Theory of Numbers," Oxford University Press, London, Eng.; 1956.

Authorized licensed use limited to: BIRLA INSTITUTE OF TECHNOLOGY AND SCIENCE. Downloaded on January 07,2026 at 12:50:34 UTC from IEEE Xplore. Restrictions apply.

Development of the Residue Code

A residue code associated with a particular natural number is formed from the least positive residues of the particular number with respect to different bases. The first requirement for an efficient residue number system is that the bases of the difference digits of the representation must be relatively prime. If a pair of bases are not relatively prime, the effect is the introduction of redundancy. The following example will illustrate this fact. Contrast the residues associated with bases of magnitude 2 and 6 against the residues associated with bases of magnitude 3 and 4. In the first case, the bases are not relatively prime while in the second case the bases are relatively prime. The residues associated with the bases of magnitude 2 and 6 are unique for only 6 states while the residues associated with the bases of magnitude 3 and 4 provide a unique residue representation for 12 states. This is further clarified by Table I.

TABLE I
Redundancy of a Nonrelatively-Primed Base Representation

Number	Least Postive Residue			
	Mod 2	Mod 6	Mod 3	Mod 4
0	0	0	0	0
1	1	1	1	1
2	0	2	2	2
3	1	3	0	3
4	0	4	1	0
5	1	5	2	1
6	0	0	0	2
7	1	1	1	3
8	0	2	2	0
9	1	3	0	1
10	0	4	1	2
11	1	5	2	3
12	0	0	0	0
13	1	1	1	1
14	0	2	2	2

An example of a residue number system is presented in Table II. The number system shown in Table II uses the prime bases 2, 3, 5 and 7. The number system therefore contains 210 states. The 210 states may correspond to the positive integers 0 to 209. Table II shows the residue number representation corresponding to the positive integers 0 to 29. Additional integers of the number system may be found by congruence operations. Let a, b, c and d be the digits associated with the bases 2, 3, 5 and 7, respectively. The following congruences define a, b, c and d for the residue representation of the number N:

$$N \equiv a \text{ Mod } 2$$
$$N \equiv b \text{ Mod } 3$$
$$N \equiv c \text{ Mod } 5$$
$$N \equiv d \text{ Mod } 7. \tag{7}$$

The residue number system is readily extended to include more states. For example, if a base 11 is added to the representation, it is then possible to represent 2310 states. Table III shows the product and sum of the first nine consecutive primes greater than or equal to 2. The product of the primes indicates the number of states of the number system, while the sum of the primes is a measure of the size of the representation in terms of digits. Table III also includes the number of bits required to represent each prime base in the binary number system.

TABLE II
Natural Numbers and Corresponding Residue Numbers

N.N.	2357	N.N.	2357	N.N.	2357
0	0000	10	0103	20	0206
1	1111	11	1214	21	1010
2	0222	12	0025	22	0121
3	1033	13	1136	23	1232
4	0144	14	0240	24	0043
5	1205	15	1001	25	1104
6	0016	16	0112	26	0215
7	1120	17	1223	27	1026
8	0231	18	0034	28	0130
9	1042	19	1145	29	1241

TABLE III
Number of States and Digits Associated with a Residue Representation

i	p_i	$\sum_{i=1}^{n} p_i$	$\prod_{i=1}^{n} p_i$	p_i bits	$\sum p_i$ bits
1	2	2	2	1	1
2	3	5	6	2	3
3	5	10	30	3	6
4	7	17	210	3	9
5	11	28	2,310	4	13
6	13	41	30,030	4	17
7	17	58	510,510	5	22
8	19	77	9,699,690	5	27
9	23	100	223,092,670	5	32

Residue Addition and Multiplication

The residue number representation consists of several digits and is assumed to be in one to one correspondence with some positive integers of the real number system. The digits of the residue representation are the least positive residues of these real positive integers with respect to the different moduli which form the bases of the residue representation. It follows as a direct consequence of the structure of the residue number system and the properties of linear congruences that operations of addition and multiplication are valid in the residue number system subject to one proviso. The proviso is that the residue system must possess a number of states sufficient to represent the generated sum or product. If the residue number system does not have a sufficient number of states to represent the sums and the products generated by particular finite set of real integers then the residue system will overflow and more than one sum

Authorized licensed use limited to: BIRLA INSTITUTE OF TECHNOLOGY AND SCIENCE. Downloaded on January 07,2026 at 12:50:34 UTC from IEEE Xplore. Restrictions apply.

or product of the real number system may correspond to one residue representation. For a residue number with a sufficient number of states an isomorphic relation exists with respect to the operations of addition and multiplication in the residue system and a finite system of real positive integers.

Each digit of the residue number system is obtained with respect to a different base or modulus. It follows, therefore, that the rules of arithmetic associated with each digit will be different. For example, the addition and multiplication of the digits associated with moduli 2 and 3 follow rules specified in Table IV. No carry

TABLE IV

MOD 2 AND MOD 3 SUMS AND PRODUCTS

⊕	0	1
0	0	1
1	1	0

sum Mod 2

⊙	0	1
0	0	0
1	0	1

product Mod 2

⊕	0	1	2
0	0	1	2
1	1	2	0
2	2	0	1

sum Mod 3

⊙	0	1	2
0	0	0	0
1	0	1	2
2	0	2	1

product Mod 3

tables are necessary since the residue number system does not have a carry mechanism. Addition of two residue representations is effected by the modulo addition of corresponding digits of the two representations. Corresponding digits must have the same base or modulus. Modulo addition of digits which have different bases is not defined. Multiplication in the residue system is effected by obtaining the modulo product of corresponding digits. The operations of addition and multiplication of two residue numbers are indicated by the following notation:

$$S = A \oplus B$$
$$p = A \odot B. \tag{8}$$

Consider a residue number representation with bases 2, 3, 5 and 7. We assume an isomorphic relation between the residue number system and the real positive numbers 0 to 209. An isomorphic relation then exists for the operations of multiplication and addition only if the product or sum is less than 210. The following examples employing residue numbers illustrate the addition and multiplication operations and the presence of an isomorphism or the lack of isomorphism in the case of overflow. Residue numbers will be distinguished by the use of parentheses.

$$29 + 27 = S = 56$$
$$29 \leftrightarrow (1\ 2\ 4\ 1)$$
$$27 \leftrightarrow (1\ 0\ 2\ 6)$$
$$56 \leftrightarrow (0\ 2\ 1\ 0)$$

$$\begin{array}{r} (1\ 2\ 4\ 1) \\ \oplus\ (1\ 0\ 2\ 6) \\ \hline (0\ 2\ 1\ 0) \end{array}. \tag{9}$$

The following operations are considered in performing the addition of the two residue representations.

$$1 + 1 \equiv 0 \text{ Mod } 2$$
$$2 + 0 \equiv 2 \text{ Mod } 3$$
$$4 + 2 \equiv 1 \text{ Mod } 5$$
$$1 + 6 \equiv 0 \text{ Mod } 7. \tag{10}$$

Consider the addition of two numbers which produce a sum greater than 209.

$$S = 100 + 200$$

$$\begin{array}{r} (0\ 1\ 0\ 2) \\ \oplus\ (0\ 2\ 0\ 4) \\ \hline (0\ 0\ 0\ 6) \end{array}. \tag{11}$$

The residue representation (0 0 0 6) corresponds to the real positive number 90. In this particular example, the sum has overflowed the residue representation. The resulting sum is the correct sum modulo 210.

$$300 \equiv 90 \text{ Modulo } 210.$$

Finite real number systems and residue number systems have the same overflow characteristics. The sum which remains after the overflow is the correct sum with respect to a modulus numerically equal to the number of states in the finite number system.

The following is presented as an example of the process of residue multiplication.

$$p = 10 \times 17 = 170$$
$$10 \leftrightarrow (0\ 1\ 0\ 3)$$
$$17 \leftrightarrow (1\ 2\ 2\ 3)$$
$$170 \leftrightarrow (0\ 2\ 0\ 2)$$

$$\begin{array}{r} (0\ 1\ 0\ 3) \\ \odot\ (1\ 2\ 2\ 3) \\ \hline (0\ 2\ 0\ 2) \end{array}. \tag{12}$$

The process of multiplication involved consideration of the following relations for each digit.

Authorized licensed use limited to: BIRLA INSTITUTE OF TECHNOLOGY AND SCIENCE. Downloaded on January 07,2026 at 12:50:34 UTC from IEEE Xplore. Restrictions apply.

$$1 \times 0 \equiv 0 \text{ Mod } 2$$
$$1 \times 2 \equiv 2 \text{ Mod } 3$$
$$0 \times 2 \equiv 0 \text{ Mod } 5$$
$$3 \times 3 \equiv 2 \text{ Mod } 7. \tag{13}$$

An overflow resulting from a multiplication is no different than the overflow resulting from an addition. Consider the product obtained from the residue multiplication of the numbers 10 and 100. The result in the modulo 210 number system is 160 since

$$1000 \equiv 160 \text{ mod } 210. \tag{14}$$

Subtraction and the Representation of Negative Numbers

The process of subtraction is obtainable in the residue number system by employing a complement representation consisting of the additive inverses of the positive residue representation. The additive inverse always exists, since each of the elements of the residue representation is an element of a field. There is no basic problem associated with the subtraction operation. There is, however, a problem associated with the representation of negative numbers. In particular, some mechanism must be included in the number system which will permit the representation of positive and negative numbers. This problem is discussed in this and the following section.

The additive inverse of a residue number is defined by the following:

$$a \oplus a' = 0. \tag{15}$$

The formula may be considered to apply to a digit of the residue system or equally well to the whole residue representation. Consider the following examples with reference to the modulo 210 residue number system.

$$a = (1\ 2\ 4\ 1) \tag{16}$$

then

$$a' = (1\ 1\ 1\ 6)$$

since

$$\begin{array}{r} (1\ 2\ 4\ 1) \\ \oplus\ (1\ 1\ 1\ 6) \\ \hline (0\ 0\ 0\ 0) \end{array}.$$

The following examples have been chosen to illustrate the subtraction process and to some extent the difficulties associated with the sign of the difference.

$$D = A \ominus B = A \oplus B'. \tag{17}$$

We consider first the case where the magnitude of A is greater than B.

Let

$$A = 200 \qquad B = 100.$$

In residue representation

$$B' = (0\ 2\ 0\ 5) \tag{18}$$

and

$$\begin{array}{r} (0\ 2\ 0\ 4) \\ \oplus\ (0\ 2\ 0\ 5) \\ \hline (0\ 1\ 0\ 2) \end{array}.$$

The residue representation of the difference corresponds to positive 100 in the real number domain. We consider next the difference

$$D = B \ominus A = A' \oplus B \tag{19}$$

where the magnitude of A is greater than B. Then

$$A' = (0\ 1\ 0\ 3) \tag{20}$$

and

$$\begin{array}{r} (0\ 1\ 0\ 3) \\ \oplus\ (0\ 1\ 0\ 2) \\ \hline (0\ 2\ 0\ 5) \end{array}.$$

The difference (0 2 0 5) is the additive inverse of (0 1 0 2). Unless additional information is supplied, the correct interpretation of the representation (0 2 0 5) is in doubt. (0 2 0 5) may correspond to either +110 or −100.

The difficulties associated with whether a residue representation corresponds to a positive or negative integer can be partially removed by the division of the residue number range into two parts. This is exactly the scheme that is employed to obtain a machine representation of positive and negative natural numbers. For the system of natural numbers two different machine representations of the negative numbers may be obtained and are commonly designated the radix complement representation of negative numbers and the diminished radix complement representation of negative numbers.

The complement representation for a residue code is defined in terms of the additive inverse. Thus, the representation of negative A is A' where $A \oplus A' = 0$, and the range of A is restricted to approximately one-half of the total possible range of the residue representation. This can be illustrated by consideration of a specific residue code. This residue representation, employing bases of magnitude 2, 3, 5, and 7, is divided into two parts. The residue representations corresponding to the natural numbers 0 to 104 are considered positive. The residue representations corresponding to the natural numbers 105 to 209 are considered inverse representations and associated with the negative integers from −1 to −105.

Authorized licensed use limited to: BIRLA INSTITUTE OF TECHNOLOGY AND SCIENCE. Downloaded on January 07,2026 at 12:50:34 UTC from IEEE Xplore. Restrictions apply.

The range of this particular number system is from -105 to $+104$. The arithmetic rules pertaining to sign and overflow conventions for this particular number system are the same rules normally associated with radix complement arithmetic.

The complement representation does eliminate in principle any ambiguity concerning the sign of the result of an arithmetic operation. However, there is a practical difficulty. The determination of the sign associated with a particular residue representation requires the establishment of the magnitude of the representation relative to the magnitude which separates the positive and negative representations. The determination of relative magnitude for a residue representation is discussed in the next section. It will be shown that the determination of relative magnitude is not a simple problem.

Conversion from a Residue Code to a Normal Number Representation

It is frequently desirable to determine the natural number associated with a particular residue representation. The need for this conversion occurs frequently when investigating the properties of the residue system. The residue representation is constructed in such a manner that magnitude is not readily obtainable. The presence of digit weights in the normal polynomial type number representation greatly facilitates the determination of magnitude. However, it is possible to assign a weight to each digit of the residue representation in such a manner that the modulo m sum of the digit-weight products is the real natural number in a consistently weighted representation. m is the product of all the bases employed in the residue representation. The conversion technique is known as "The Chinese Remainder Theorem." The material which follows describes the conversion technique but omits the proof. A simple and straightforward proof is found in Dickson.[2] The proof does not refer specifically to residue number systems, but rather to a system of linear congruences. If so regarded, a system of congruences defines a component of a residue number system.

Consider a residue number system with bases $m_1 \cdots m_t$. The corresponding digits are labeled $a_1 \cdots a_t$. The following equations define the conversion process.

$$a_1 A_1 \frac{m}{m_1} + \cdots + a_t A_t \frac{m}{m_t} \equiv S \text{ Mod } m \tag{21}$$

where

$$A_i \frac{m}{m_i} \equiv 1 \text{ Mod } m_i$$

and

$$m = \prod_{j=1}^{t} m_j.$$

The conversion formula for a particular residue number system is now obtained.

$$m_1 = 2 \qquad m_2 = 3 \qquad m_3 = 5 \qquad m_4 = 7$$

$$\begin{aligned} 105\, A_1 &\equiv 1 \text{ Mod } 2 && \text{so } A_1 = 1 \\ 70\, A_2 &\equiv 1 \text{ Mod } 3 && \text{so } A_2 = 1 \\ 42\, A_3 &\equiv 1 \text{ Mod } 5 && \\ 2\, A_3 &\equiv 1 \text{ Mod } 5 && \text{so } A_3 = 3 \\ 30\, A_4 &\equiv 1 \text{ Mod } 7 && \\ 2\, A_4 &\equiv 1 \text{ Mod } 7 && \text{so } A_4 = 4 \end{aligned}$$

$$105\, a_1 + 70\, a_2 + 126\, a_3 + 120\, a_4 \equiv S \text{ Mod } 210. \tag{22}$$

The conversion formula is now used to determine the natural number corresponding to the residue representation (1 2 0 4).

$$\begin{aligned} 105\,(1) + 70\,(2) + 126\,(0) + 120\,(4) &= 725 \\ 725 &\equiv S \text{ Mod } 210 \\ S &= 95. \end{aligned} \tag{23}$$

The above conversion formula may be obtained in a much more direct manner. The residue number representation may be regarded as a vector with the base vectors (1000), (0100), (0010) and (0001). The residue representation expressed in terms of the base vectors is:

$$(a_1 a_2 a_3 a_4) = a_1(1000) \oplus a_2(0100) \oplus a_3(0010) \oplus a_4(0001). \tag{24}$$

The magnitude of the base vectors is

$$\begin{aligned} (1000) &\leftrightarrow 105 \\ (0100) &\leftrightarrow 70 \\ (0010) &\leftrightarrow 126 \\ (0001) &\leftrightarrow 120. \end{aligned} \tag{25}$$

Other conversion techniques exist. In particular it is possible by means of a deductive process to determine the magnitude of a particular residue representation. This requires both a knowledge of the nature of the residue system and the natural number representation associated with at least one residue representation.

Due to the deductive nature of the process, it is more suitable for human computation than for machine computation. The process is explained using the residue number of the previous example (1 2 0 4). The knowledge of the residue representation for unity which is (1 1 1 1) is assumed. Consider the effect of changing the second digit from one to two. The change adds the product $m_1 m_3 m_4 = 70$ to the number since 70 is congruent 1, modulo 3. The resulting residue representation (1 2 1 1) corresponds to 71. The effect of changing the third digit is to change the magnitude by some multiple of the product $m_1 m_2 m_4 = 42$. The correct change in magnitude is $42x$ where $42x \equiv 4$ Mod 5. So $42x = 84$ and the

[2] L. E. Dickson, "Modern Elementary Theory of Numbers," University of Chicago Press, Chicago, Ill., p. 16: 1939.

Authorized licensed use limited to: BIRLA INSTITUTE OF TECHNOLOGY AND SCIENCE. Downloaded on January 07,2026 at 12:50:34 UTC from IEEE Xplore. Restrictions apply.

residue representation (1 2 0 1) corresponds to 155. The fourth digit is modified by the addition of a three. The effect of this change is determined by $30x \equiv 3$ Mod 7. The magnitude change is 150. The sum of 150 and 155 modulo 210 yields the correct result 95, in correspondence with (1 2 0 4).

Sign determination for the residue code is dependent on the determination of a greater than or less than relationship. A possible method might involve the conversion techniques described previously. Such a scheme would involve the standard comparison techniques associated with the determination of the relative magnitude of two numbers represented in a weighted representation. An alternate conversion procedure yields a conversion from the residue code to a nonconsistently based polymonial number representation by means of residue arithmetic. Consider a residue code consisting of t digits. The t digits of the residue code are associated with t congruence relationships as follows:

$$S \equiv a_i \text{ Mod } m_i \qquad 1 \leq i \leq t \tag{26}$$

S is the magnitude of the number expressed in normal representation. It is also possible to express the number S as

$$S = a_i + A_i m_i. \tag{27}$$

A_i is the integer part of the quotient of S divided by m_i. In regard to a greater or less than relationship, the determination of A_i divides the range of the residue representation into m/m_i parts. We proceed to calculate A_i from the set of t equations given above. Let

$$S = a_t + A_t m_t \qquad A_t < \frac{m}{m_t}. \tag{28}$$

This equation is then used to replace S in the remaining $t-1$ equations, yielding $t-1$ equations of the form

$$A_t m_t \equiv (a_i + a_t') \text{ Mod } m_i \quad 1 \leq i \leq t-1 \tag{29}$$

or

$$A_t \equiv (a_i + a_t')/m_t^i \text{ Mod } m_i$$

$$A_t \equiv d_t^i \text{ Mod } m_i$$

where $/m_t^i$ is the multiplicative inverse of m_t with respect to base m_i. The multiplicative inverse is defined as[3]

$$x_t/x_t^i \equiv 1 \text{ Mod } m_i \tag{30}$$

d_t^i is the least positive residue of $(a_i + a_t')/m_t$ with respect to base i. a_t' is the additive inverse of a_t. Let A_t be expressed as

$$A_t = d_t^{t-1} + A_{t-1} m_{t-1} \qquad A_{t-1} < \frac{m}{m_t m_{t-1}}. \tag{31}$$

[3] The existence of the multiplicative inverse requires that x_t and m_i be relatively prime.

If this expression is substituted for A_t a set of $t-2$ equations remain. The equations are of the form

$$A_{t-1} \equiv [d_t^i + (d_t^{t-1})']/m_{t-1} \text{ Mod } m_i \quad 1 \leq i \leq t-2$$

$$A_{t-1} \equiv d_{t-1}^i \text{ Mod } m_i. \tag{32}$$

The system of equations shown below is generated by repetition of the above substitution process until no equations remain.

$$S = a_t + A_t m_t \tag{33}$$

$$A_t = d_t^{t-1} + A_{t-1} m_{t-1}$$

$$A_{t-1} = d_{t-1}^{t-2} + A_{t-2} m_{t-2}$$

$$\vdots$$

$$A_3 = d_3^2 + A_2 m_2$$

$$A_2 \equiv d_2^1 \text{ Mod } m_1. \tag{34}$$

The equations are combined to yield:

$$S = a_t + m_t \{ d_t^{t-1} + m_{t-1}[d_{t-1}^{t-2} + m_{t-2}(d_{t-2}^{t-3} + \cdots \tag{35}$$

$$= a_t + m_t d_t^{t-1} + m_t m_{t-1} d_{t-1}^{t-2}$$

$$+ m_t m_{t-1} m_{t-2} d_{t-2}^{t-3} + \cdots + \frac{m}{m_1} d_2^1 \tag{36}$$

where

$$A_t < m_t$$

$$d_{t-n}^{t-n-1} < m_{t-n-1}.$$

Therefore, S is never equal to or greater than m and d_2^1 divides the range into m_1 parts, d_3^2 divides each of the m_1 parts into m_2 parts, d_4^3 divides each of the m_2 parts into m_3 parts, etc.

The formulas which define the conversion process may be applied recursively to obtain a formula for a greater number of digits. The process has been extended to five variables and the results are shown in Fig. 1.

A somewhat simpler interpretation of the conversion process is obtained if (36) is considered from the vector viewpoint. Let the terms 1, m_t, $m_t m_{t-1}$, $\cdots$, m/m_1 be regarded as base vectors. The residue representation of the base vectors is readily obtainable and the following characteristics with respect to zero and nonzero digits of the base vectors are observed

$$1 \leftrightarrow (xxx \cdots xxx)$$

$$m_t \leftrightarrow (xxx \cdots xx0)$$

$$m_t m_{t-1} \rightarrow (xxx \cdots x00) \quad x \text{ indicates a nonzero digit}$$

$$\vdots \qquad\qquad 0 \text{ indicates a zero digit}$$

$$\frac{m}{m_1} \leftrightarrow (x00 \cdots 000). \tag{37}$$

The following equality exists between the vector representation of the residue code and the vector representation of the nonconsistently based code.

Authorized licensed use limited to: BIRLA INSTITUTE OF TECHNOLOGY AND SCIENCE. Downloaded on January 07,2026 at 12:50:34 UTC from IEEE Xplore. Restrictions apply.

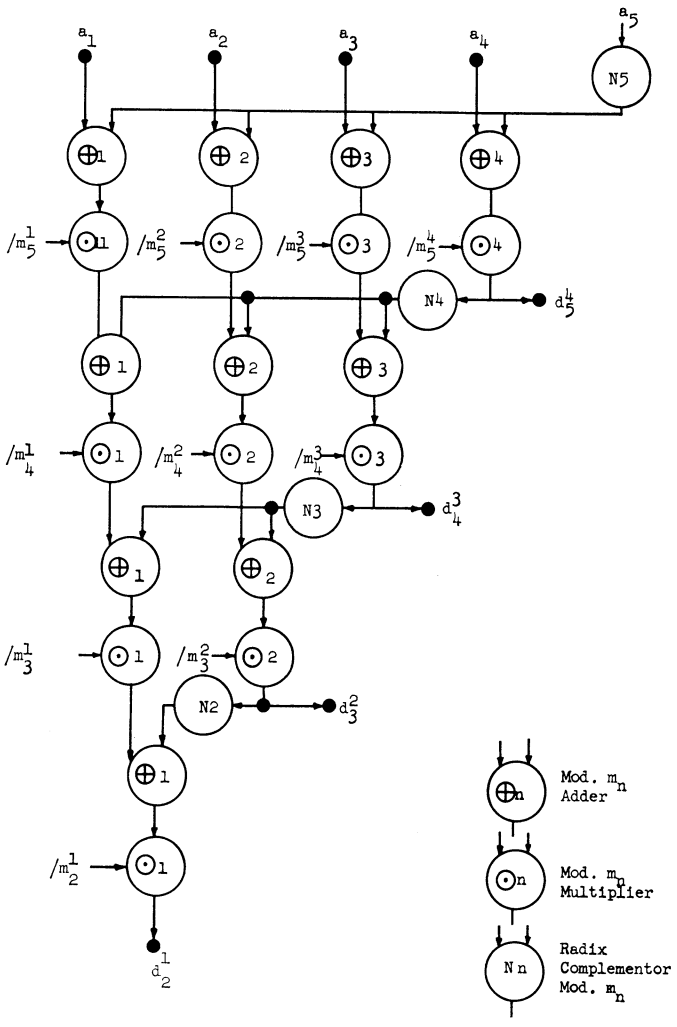

Fig. 1—Logic required to convert from the residue code to a weighted code.

$$
\begin{aligned}
&a_1(101 \cdots 000) \oplus a_2(010 \cdots 000) \oplus \cdots \\
&\quad \oplus a_{t-1}(000 \cdots 010) \oplus a_t(000 \cdots 001) \\
&\quad = a_t(111 \cdots 111) \oplus d_t^{t-1}(1xx \cdots xx0) \oplus \cdots \\
&\quad \oplus d_3^2(1x0 \cdots 000) \oplus d_2^1(100 \cdots 000). \qquad (38)
\end{aligned}
$$

Equating the coefficients of each coordinate in (38) obtains the following set of equations relating the residue digits and the digit of the nonconsistently based number system.

$$
\begin{aligned}
a_t &\equiv a_t \bmod m_t \\
xd_t^{t-1} + a_t &\equiv a_{t-1} \bmod m_{t-1} \\
&\vdots \\
xd_3^2 + \cdots + xd_t^{t-1} + a_t &\equiv a_2 \bmod m_2 \\
d_2^1 + d_3^2 + \cdots + d_t^{t-1} + a_t &\equiv a_1 \bmod m_1. \qquad (39)
\end{aligned}
$$

The conversion is executed by first subtracting $a_t(111 \cdots 111)$; d_t^{t-1} is then a function of only one residue digit and may be determined. This is followed by the subtraction of $d_t^{t-1}(1xx \cdots xx0)$ etc. Consider the conversion of the residue representation (1204) with bases 2, 3, 5 and 7.

The weights and the corresponding residue representation of the nonconsistently based code are:

$$
\begin{aligned}
1 &\leftrightarrow (1111) \\
m_4 = \quad 7 &\leftrightarrow (1120) \\
m_4m_3 = \quad 35 &\leftrightarrow (1200) \\
m_4m_3m_2 = \quad 105 &\leftrightarrow (1000). \qquad (40)
\end{aligned}
$$

The actual conversion between the residue code and the nonconsistently based code is accomplished by the following operation:

	(120④)	1st digit is a 4 since $4 \cdot 1 \equiv 4 \bmod 7$
$\oplus$	(0213)	Subtract off 4(1111) = (0144)
	11①0	2nd digit is a 3 since $3 \cdot 2 \equiv 1 \bmod 5$
$\oplus$	104	Subtract off 3(1120) = (1010)
	0①00	3rd digit is a 2 since $2 \cdot 2 \equiv 1 \bmod 3$
$\oplus$	02	Subtract off 2(1200) = (0100)
	00	4th digit is 0.

Thus

$$
\begin{aligned}
S &= 105 \cdot 0 + 35 \cdot 2 + 7 \cdot 3 + 1 \cdot 4 \\
&= 95. \qquad (41)
\end{aligned}
$$

Admittedly, the process required to obtain a magnitude leaves much to be desired though the conversion process is no more complicated than the standard change of base conversion process used for consistently based number systems. One presumed advantage of the residue number system was the absence of a carry process. The greater or less than process is essentially sequential and is in many ways similar to the carry process of ordinary arithmetic. The ultimate usefulness of the residue code for general purpose computation appears very much dependent on the development of simple techniques for the determination of the relative magnitude of two residue code digits.

Division

The division process for residue codes is complicated by two factors. The first is the absence of a multiplicative inverse for the zero element. The second difficulty is the fact that residue division and the normal division process are in one to one correspondence only when the resulting quotient is an integer value. We shall consider first the problem of residue division of the elements of a single field and shall consider later the elements of several fields considered as a residue code. The division process represented in equation form as

$$\frac{a}{b} = q \qquad (42)$$

implies the following equation:

$$a = bq. \qquad (43)$$

The difference between normal arithmetic and residue arithmetic is that in residue arithmetic the product bq

Authorized licensed use limited to: BIRLA INSTITUTE OF TECHNOLOGY AND SCIENCE. Downloaded on January 07,2026 at 12:50:34 UTC from IEEE Xplore. Restrictions apply.

need not necessarily be equal to a, only the congruence of a and bq is required.

$$bq \equiv a \text{ Mod } m_n. \tag{44}$$

Multiplication by the multiplicative inverse of b designated $/b$ obtains

$$q \equiv a/b \text{ Mod } m_n. \tag{45}$$

The correct interpretation of q in the above equation is that the number a is obtained by forming the modulo sum consisting of b, q representations. The sum is carried out in a closed and finite modulo number system of base m_n. Thus, q corresponds to the quotient only when the quotient has an integer value. Examples may be obtained from the consideration of a modulo 5 number system

$$\frac{4}{2} = q \tag{46}$$

$$2q \equiv 4 \text{ Mod } 5$$

$$q \equiv 2 \text{ Mod } 5$$

$$\frac{4}{3} = q \tag{47}$$

$$3q \equiv 4 \text{ Mod } 5$$

$$q \equiv 3 \text{ Mod } 5$$

$$\text{note } 3 \times 3 \equiv 4 \text{ Mod } 5$$

$$\frac{3}{4} = q \tag{48}$$

$$4q \equiv 3 \text{ Mod } 5$$

$$q \equiv 2 \text{ Mod } 5.$$

In the above examples, q corresponds to the quotient only in the first example.

The residue code representation of a number consists of many digits, $A = (a_1, a_2, \cdots, a_n)$. Each digit of the representation is associated with a different prime base. The number system is a modulo m system where

$$m = \prod_{i=1}^{n} m_i.$$

The division of two numbers in residue code may be expressed by a system of congruences. The solution $Q = (q_1, q_2, \cdots, q_n)$ must satisfy all the congruence relationships of the system. A zero digit in the divisor $B = (b_1, b_2, \cdots, b_n)$ means that B and m are not relatively prime hence the multiplicative inverse of B doesn't exist.

$$QB \not\equiv A \text{ Mod } m. \tag{49}$$

For the special case in which $b_i = 0$ and $a_i = 0$, a valid congruence relationship of the form

$$\frac{QB}{m_i} \equiv \frac{A}{m_i} \text{ Mod } \frac{m}{m_i} \tag{50}$$

is obtainable.

The process of residue division has certain interesting properties and quite possibly has applications in respect to special problems. Unfortunately, the residue division process is not a substitute for normal division. It appears that the only way in which division can be effected in the residue code is by the utilization of techniques similar to those employed for division in a consistently weighted number system. The division process then requires trial and error subtraction or addition and the greater than or less than relationship. The division algorithm could also include trial multiplication since in the residue system addition and multiplication require the same period of time.

Conclusions

The material of this paper forms a preliminary investigation of the applicability of residue number systems to the arithmetic operations of digital computers. The residue system has been found attractive in terms of the operations of multiplication and addition. It is possible to realize practical logical circuitry to yield the product in the same operation time as for the sum since the product is not obtained by the usual procedure of repetitive addition. The main disadvantages of the residue number system are associated with the necessity of determining absolute magnitude. Thus, the division process, the detection of an overflow and the determination of the correct sign of a subtraction operation are processes which at this stage of the investigation seem to involve considerable complexity. Nevertheless, there are certainly many special purpose applications well-suited to the residue code. In particular, there exists a class of control problems characterized by the absence of the need for division, the existence of a well-defined range for the variables and also by the fact that the sign of the variables is known. For the problems of this class, the use of the residue code should result in a reduction of the over-all computation period and give a computer with a higher bandwidth than obtainable with the conventional number system.

The ultimate usefulness of the residue code will probably be determined largely by the success of the circuit designer in perfecting circuitry ideally suited for residue code operations.

Acknowledgment

The material of this paper is essentially Chapter 5 of the author's Ph.D. dissertation.[4] At the time of the completion of the dissertation, the author was unaware of the work of Valach[5] and Svoboda[6,7] in Czechoslovakia, references of which were obtained from recent visitors to the Soviet Union. The author wishes to take this opportunity to acknowledge same.

[4] H. L. Garner, "Error Checking and the Structure of Binary Addition," Ph.D., dissertation, University of Michigan, Ann Arbor, Mich., pp. 105–140; 1958.

[5] M. Valach, "Vznik kodu a ciselne soustavy zbytkovych trid," *Stroje Na Zpracovani Informaci*, Sbornik III; 1955.

[6] A. Svoboda and M. Valach, "Operatorove Obvody," *Stroje Na Zpracovany Informaci*, Sbornik III; 1955.

[7] A. Svoboda, "Rational Numerical System of Residual Classes," *Stroje Na Zpracovani Informaci*, Sbornik V; 1957.

Authorized licensed use limited to: BIRLA INSTITUTE OF TECHNOLOGY AND SCIENCE. Downloaded on January 07,2026 at 12:50:34 UTC from IEEE Xplore. Restrictions apply.