GLWG107

Weighing Module

GRV Automation | CE Certified | Custom Configurations Available on Request

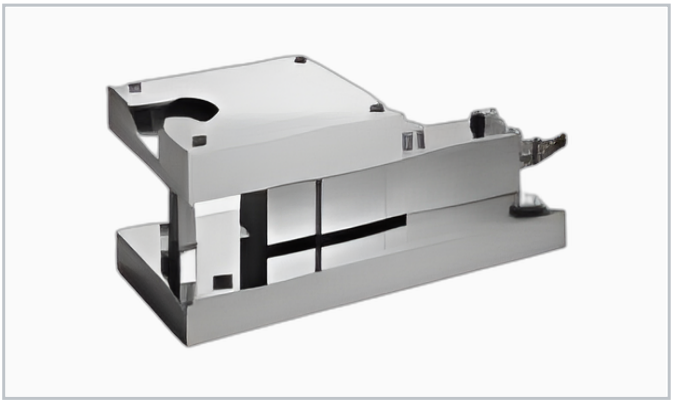

Application / Features

- Dynamic torque and speed measurement weighing module
- Rated capacity 0-20T
- Integrated sensor with display system
- Real-time speed and power calculation
- RS485 / analog output options
- Motor testing, pump testing, power measurement systems

Rated range: 0-20T

Rated Capacity		**0-20T**
Material		**Alloy Steel / Stainless Steel**
Mounting		**Welding or bolted flange**
Degree of Freedom		**2D / 3D constrained**
Overload Protection	%R.C.	**150**
Operating Temp.	degC	**-20 to +70**
IP Rating		**IP67**
Applicable Load Cell		**Column type / shear beam**

1) High temperature sensors available (max. 150 deg C). 2) High impedance option (1000 Ohm) on request. 3) Specifications subject to change without prior notice.