Shri Sant Gajanan Maharaj College of Engineering Shegaon
Department of Electrical (Electronics & Power) Engineering

Link for Simulation Based Learning:
https://drive.google.com/file/d/1hHv4paIzjKXBauqjSfK_szqUimpflh_R/view?usp=sharing

Case Study – I
Course Title & Code: Power System II (7EP01)
Class: FinalYear Electrical Engineering (Electronics & Power)
Semester: VII
Course Teacher: Dr. S. R. Paraskar
Title of the Innovative Practice: Simulation-Based Learning of Voltage Sags using MATLAB/Simulink (Due To Faults)

Objectives / Goals of the Practice

The primary goal of this innovative teaching practice was to deepen the students' conceptual and analytical understanding of power quality disturbances—particularly voltage sags—using MATLAB/Simulink. The simulation model was developed to visualize and analyze how different types of line faults impact the voltage levels at the load end in a power system.

Specific Objectives:

- To simulate different types of faults in a medium-voltage network and observe their impact on voltage sags.
- To enhance practical understanding of the transformer behavior under fault conditions (with delta/star configuration).
- To visualize multistage voltage sag and its propagation in the power system.
- To provide students with an industry-relevant learning experience in power system fault analysis.

Methods and Strategies Employed

- **Development of a Line Fault Simulation Model:**
  A custom Simulink model was created with an 11 kV, 50 Hz, 30 MVA three-phase source, feeding a 200 kVA resistive load through a delta/star 11 kV/415 V transformer.
- **Fault Insertion at Bus 1:**
  Various fault types were introduced using configurable fault blocks at the source feeder (Bus 1), including:
  - Single Line-to-Ground (SLG)
  - Line-to-Line (LL)
  - Double Line-to-Ground (DLG)
  - Three-phase (LLL)
  - Multistage fault scenarios

- **Measurement and Visualization:**
  RMS voltage measurement blocks were used to observe voltage sag propagation from the faulted bus through the transformer to the load side.
- **Experimental Variation of Fault Parameters:**
  Fault resistance and ground impedance were varied to simulate different sag depths and multistage sag behavior due to impedance changes.

Significance of Results

- **Conceptual Clarity in Voltage Sag Dynamics:**
  Students could visually analyze the effect of fault location and type on downstream voltage.
- **Understanding Transformer Influence:**
  The Δ/Y transformer altered fault current propagation, showing realistic changes in voltage profile during SLG and symmetrical faults.
- **Exposure to Multistage Faults:**
  Students learned how coordination delays or sequential faults cause multistage voltage sags in real-world systems.
- **Practical Skill Enhancement:**
  Hands-on simulation helped students relate theoretical fault analysis with actual system response

Photos of the activity

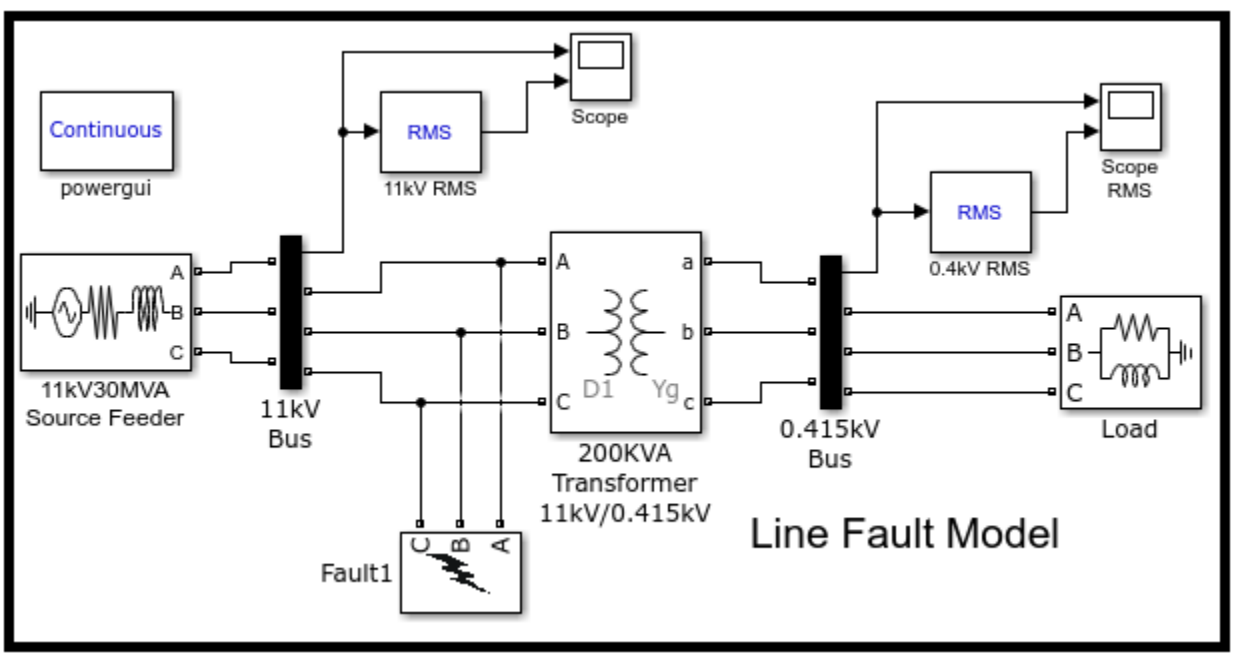

Program Outcomes (POs) Mapped

POs Mapped: PO1, PO2, PO5, PO12

PSO Mapped: PSO1

Reflective Critique

The faculty observed strong engagement and curiosity among students as they experimented with various fault conditions. Students demonstrated analytical thinking while interpreting sag waveforms and correlating them with fault parameters. The real-time visualization helped in internalizing abstract fault concepts.

Feedback and Suggestions:

- Dr. S. S. Jadhao suggested that future iterations of this lab can include sag mitigation techniques using FACTS devices or DVRs.
- Students recommended the inclusion of more complex network scenarios with relay coordination and fault clearing times.
- Faculty members emphasized incorporating fault detection algorithms as an extension to this simulation practice.

Evidences of Success

- Over **80% of students successfully simulated and analyzed at least three fault types** using the Simulink model.
- Students provided detailed reports explaining the type of sag, its depth, and propagation.
- Oral assessments showed improved understanding of fault behavior and power quality.
- Many students showed enthusiasm to extend the simulation model for final-year project work.

Challenges Faced During Implementation

- **Tool Familiarity:**
  Some students were new to Simulink and required initial guidance on building and running simulations.
- **Model Complexity:**
  Interpreting transformer behavior and multistage sag propagation needed additional mentoring for some students.
- **System Performance:**
  Simulations involving multistage faults and low impedance required careful tuning of solver parameters for stability.
- **Time Constraints:**
  Due to complexity, fault-by-fault simulations consumed significant lab time; structured task allocation helped manage progress.

Link for Peer Review: https://forms.office.com/r/v4GtMkmz9K?origin=lprLink