Case Study – VII-2

Shri Sant Gajanan Maharaj College of Engineering, Shegaon
Department of Electrical (Electronics & Power) Engineering

Activity Link :
https://drive.google.com/file/d/18567UI9AAXuWQKhDc_HxX2sWuKeSrop0/view?usp=drive_link

Course Title & Course Code: Power Electronics Lab (6EP01)
Class: Third Year Electrical Engineering
Semester: VI
Name of the Course Teacher: Prof. V.S.Karale
Title of the Innovative Practice: Simulation of Half-Controlled Rectifier Using MATLAB/Simulink

Objectives/Goals of the Practice

The main objective of this practical innovation is to enhance student understanding of **power electronic converters** through **MATLAB-based simulation** of a **half-controlled rectifier**. This virtual experiment focuses on circuit behavior analysis, waveform observation, and output voltage control.

Specific Objectives:

- To simulate a single-phase half-controlled rectifier using MATLAB/Simulink.
- To study the effect of firing angle variation on the output voltage and waveform.
- To compare the performance of half-controlled rectifiers with fully controlled and uncontrolled rectifiers.
- To introduce students to practical converter behavior without hardware limitations.

Use of Appropriate Methods

To meet the objectives, the following approach was adopted:

- **Simulation-Based Learning:**
  The half-controlled rectifier circuit (with resistive and RL loads) was simulated using **MATLAB Simulink**. Students created a model using **thyristors (SCRs)**, **diodes**, **pulse generators**, and appropriate **load blocks**.
- **Stepwise Implementation:**
  Students followed these stages:
  1. Construction of the rectifier model with SCRs and diodes.
  2. Design of a pulse generation circuit with variable firing angle.
  3. Analysis of output voltage waveform with different loads and angles.
  4. Observation of input and output current behavior.
- **Performance Analysis:**
  Students plotted waveforms of input/output voltage and current, THD (if applicable), and studied the control characteristics of the rectifier.

- **Assignments and Comparison:**
  Students compared half-controlled rectifier performance with fully-controlled and uncontrolled circuits under similar conditions.

Significance of Results

- **Visual Understanding of Waveforms:**
  Students observed the impact of controlled switching on output waveform shape, which greatly clarified the theoretical concepts.
- **Understanding Firing Angle Control:**
  Students grasped how phase angle control affects average output voltage, ripple factor, and power quality.
- **Flexible Experimentation:**
  Students could test extreme conditions (e.g., high firing angles, inductive loads) which may not be safe or feasible in a physical lab setup.
- **Platform Familiarity:**
  Enhanced student familiarity with **MATLAB/Simulink**, preparing them for industry or research applications.

Effecive Presentation

- MATLAB Simulink models were prepared by each student.
- Output voltage/current waveforms were captured using scope blocks and documented with various firing angles (e.g., 0°, 30°, 60°, 90°).
- Comparative plots and graphs were used to highlight variations in output voltage.
- Students submitted well-documented simulation reports with screenshots and observations.

Photo of the activity:

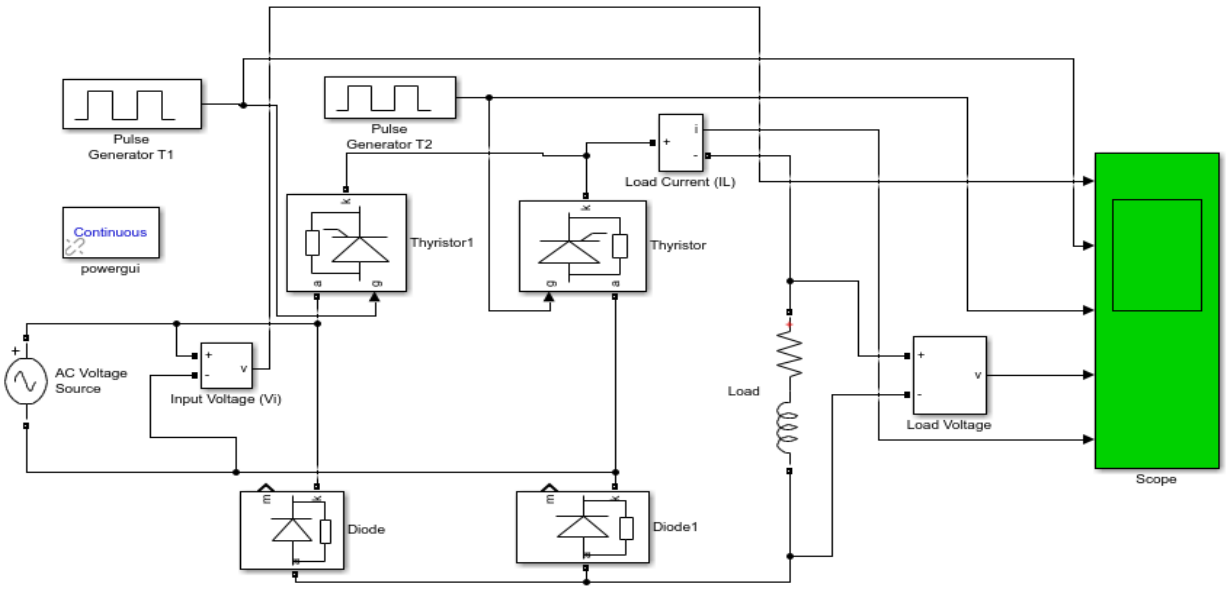

Program Outcomes (POs) Mapped:

- **POs:** PO1, PO2, PO3, PO4, PO5, PO12
- **PSOs:** PSO1

Reflective Critique

The faculty noted that simulation-based learning helped students visualize the practical behavior of power electronic circuits. Complex topics such as **commutation**, **firing delay**, and **converter operation in different quadrants** were better understood through simulation.

Faculty Suggestions:

- Incorporate **performance analysis using FFT blocks** to introduce harmonic content and power quality analysis.
- Extend the simulation to include **real-time interfacing with hardware using dSPACE or Arduino** for advanced students.

Student Feedback:

- Students found the flexibility of MATLAB simulation very helpful in testing different load and control conditions.
- Many students expressed improved clarity in SCR triggering, waveform phase control, and average voltage calculation.

Evidences of Success

- Over **90% of students successfully implemented** the half-controlled rectifier in MATLAB and submitted correct output waveforms.
- Students performed well in viva-voce and theoretical questions related to controlled rectifiers in exams.
- Some students modified the base model to simulate three-phase or fully controlled configurations, showing deeper understanding and curiosity.

Challenges Faced During Implementation

- **MATLAB Proficiency Gaps:** Some students were unfamiliar with Simulink, requiring introductory guidance.
- **Simulation Errors:** Incorrect pulse width and firing angle settings led to troubleshooting delays.
- **Limited Access to Licensed MATLAB:** Some students had difficulty accessing MATLAB at home due to license limitations, which was resolved via the campus lab sessions.

Peer Review & Critique Form Link: https://forms.office.com/r/fzhnpVdEdS