© COPYRIGHT EDWARDS LIMITED. THIS IS THE PROPERTY OF EDWARDS LIMITED.
IT MUST NOT BE COPIED OR OTHERWISE MADE USE OF WITHOUT WRITTEN PERMISSION.

CLASSIFICATION CONFIDENTIAL

**IMPORTANT: REMOVE ALL BURRS AND SHARP EDGES UNLESS OTHERWISE STATED.**

**DO NOT SCALE - IF IN DOUBT ASK**

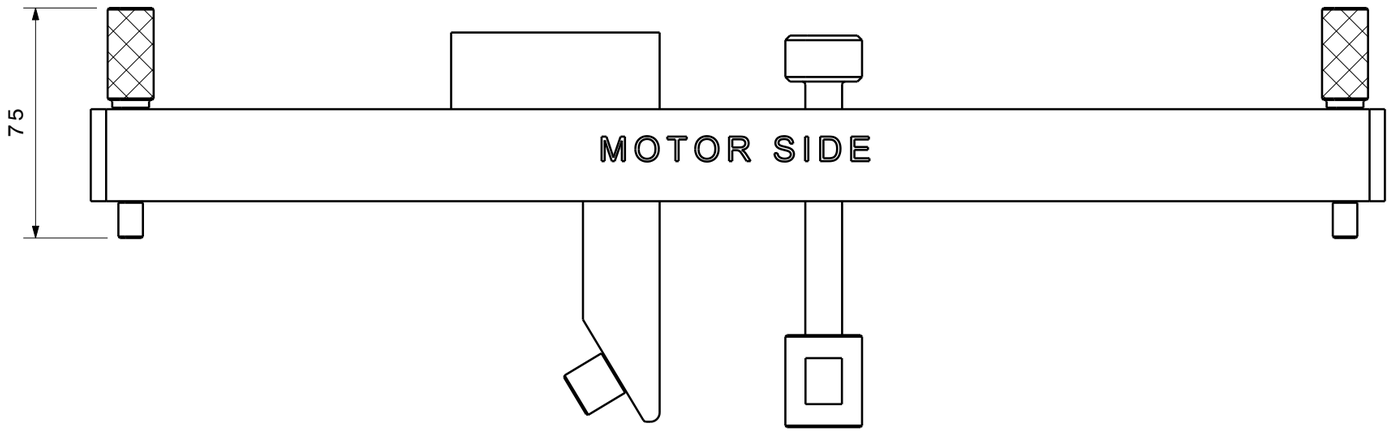


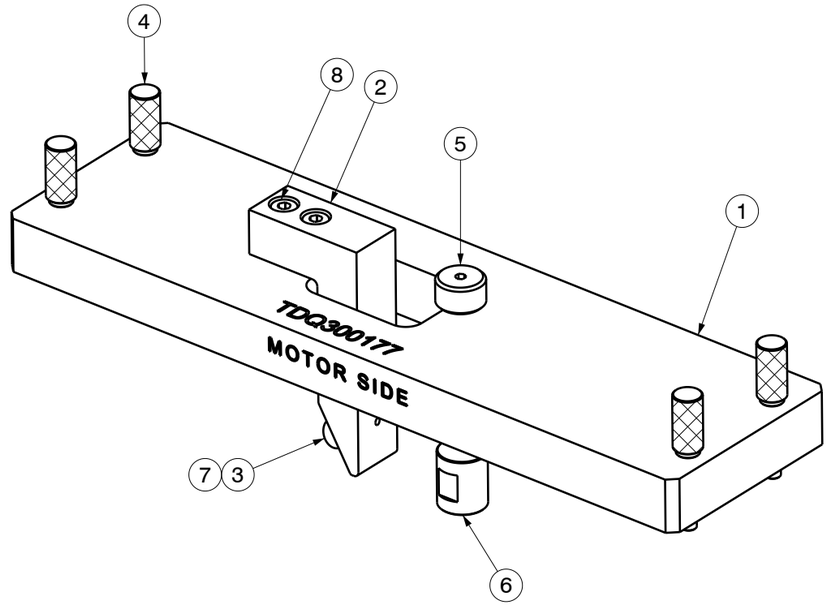


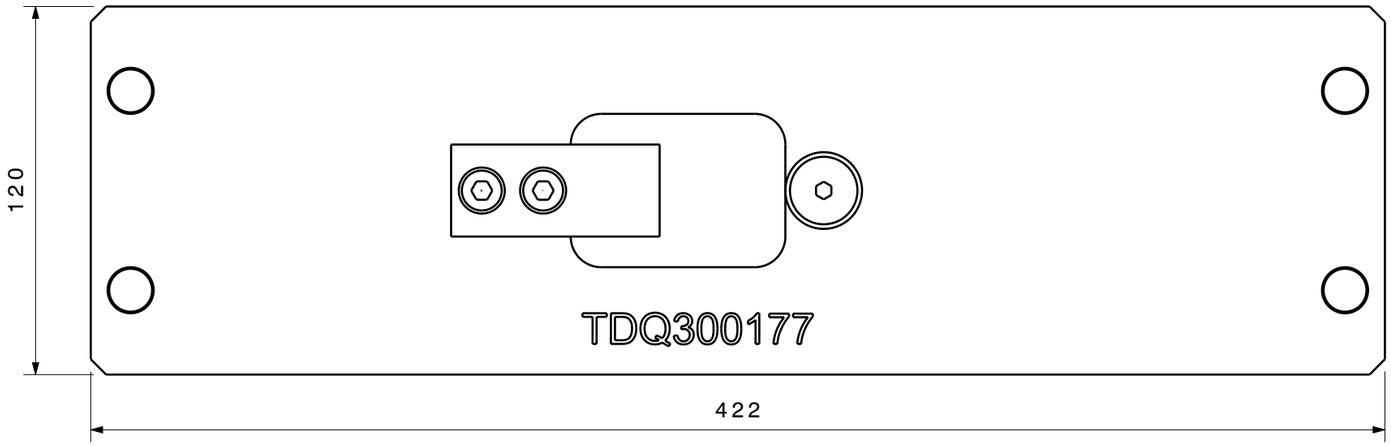


| ITEM | PART NUMBER | DESCRIPTION | QTY |
|---|---|---|---|
| 8 | 218231413 | M8X30 SOC HD CAP SCREW SS | 2 |
| 7 | TDQ300177-07 | SCREW M4 X 20 CSK SKT HD SCREW | 1 |
| 6 | TDQ300177-06 | CLAMP TIP | 1 |
| 5 | TDQ300177-05 | CLAMP SCREW | 1 |
| 4 | TDQ300177-04 | M8 THUMB SCREW | 4 |
| 3 | TDQ300177-03 | TIP | 1 |
| 2 | TDQ300177-02 | TIMING TOOL ARM | 1 |
| 1 | TDQ300177-01 | BASE PLATE | 1 |

BELOW GENERAL NOTES ARE APPLICABLE TO PARTS DRAWN ON SHEET 2 TO SHEET 4
1. ALL UNSPECIFIED EDGE CHAMFER 0.5x45°MAX
2. ALL UNSPECIFIED CORNER R0.5MAX

SCALE 1:3
DRWN GHOGREYOGE
DATE 2026-02-19
TECHNICAL -
APPR'D -

TOLERANCES
UNTOLERANCED DIMENSIONS
ISO 2768-mK

DESCRIPTION: TIMING TOOL ARM
MATERIAL: SEE NOTES
FINISH: SEE NOTES

| SIZE | DRAWING NUMBER | SHEET No |
|---|---|---|
| A3 | TDQ300177 | 1 OF 5 |

ISSUE 1
DRAWING NUMBER TDQ300177
SIZE A3
PROJECT MSR
REVISED BY: GHOGREYOGE
DATE: 2026-02-19
EC No: N/A
ISSUE 1

© COPYRIGHT EDWARDS LIMITED. THIS IS THE PROPERTY OF EDWARDS LIMITED.
IT MUST NOT BE COPIED OR OTHERWISE MADE USE OF WITHOUT WRITTEN PERMISSION.

CLASSIFICATION CONFIDENTIAL

**IMPORTANT: REMOVE ALL BURRS AND SHARP EDGES UNLESS OTHERWISE STATED.**

**DO NOT SCALE - IF IN DOUBT ASK**

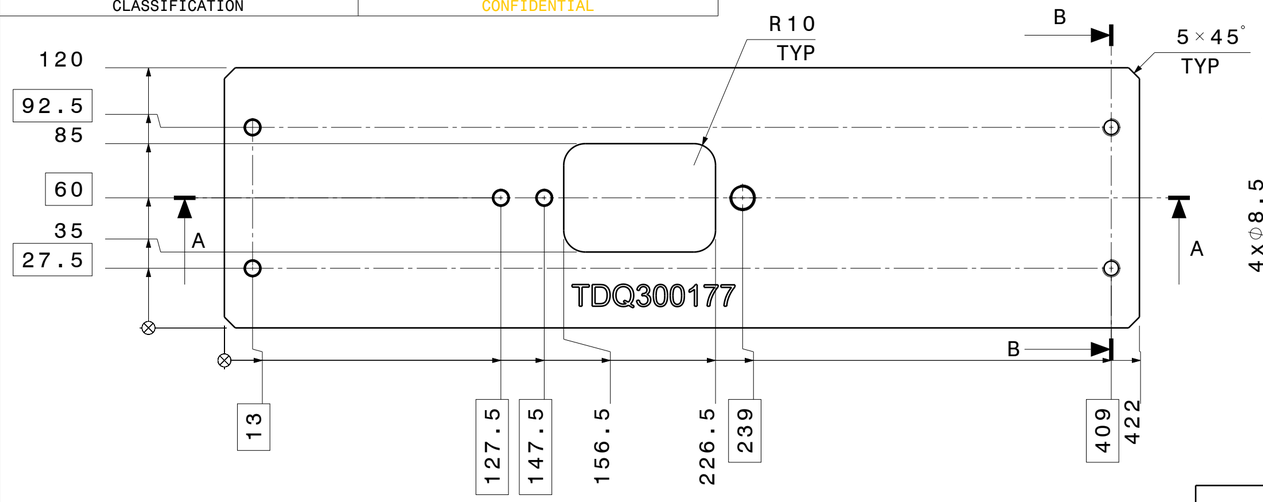


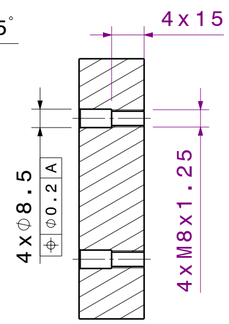


SECTION B-B

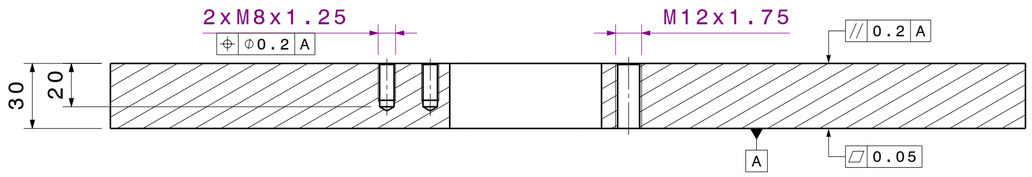


SECTION A-A

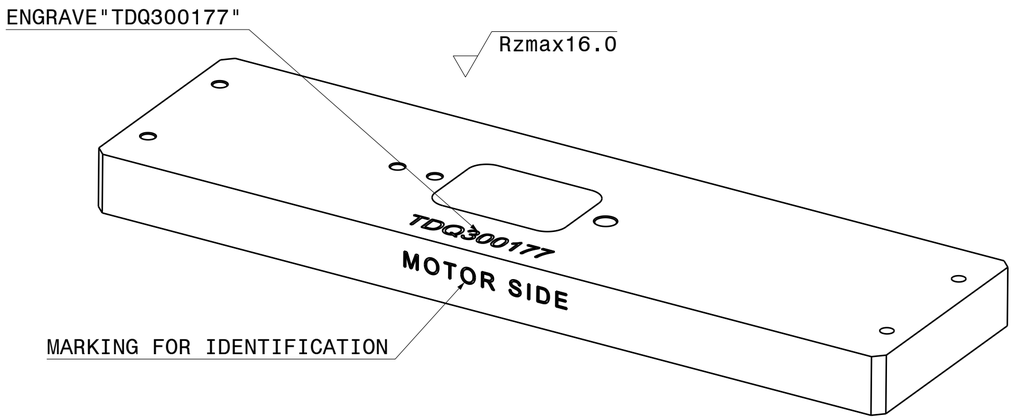


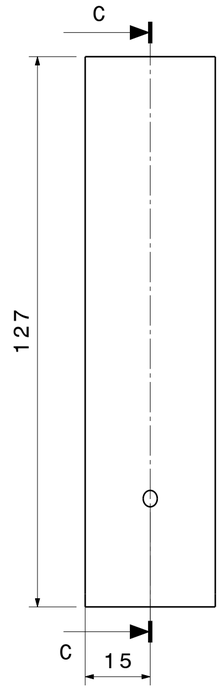


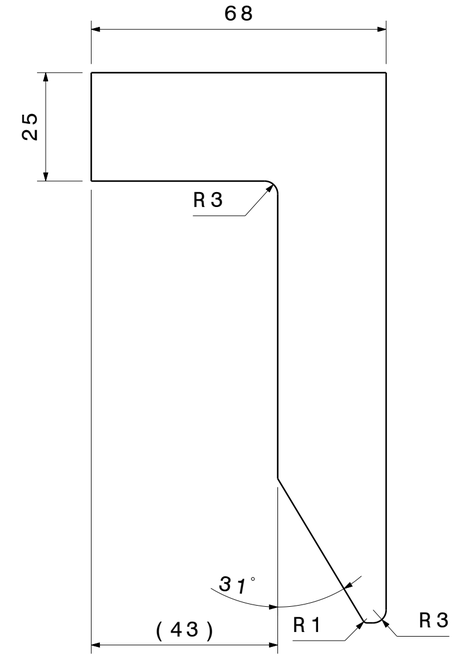


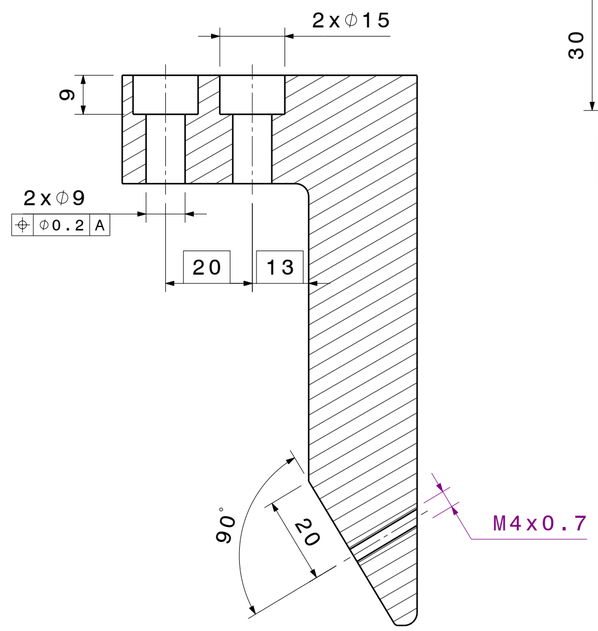


SECTION C-C

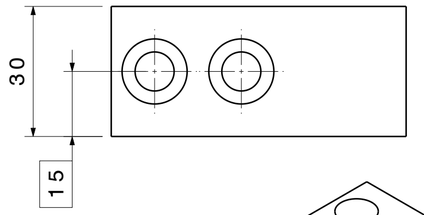


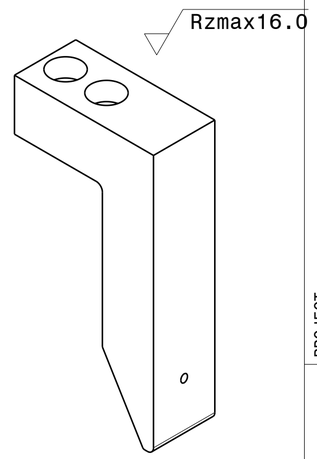


PART NUMBER: TDQ300177-02
DESCRIPTION: TIMING TOOL ARM
MATERIAL: EDM000136/ En8
FINISH: CHEMICAL BLACK

PART NUMBER: TDQ300177-01
DESCRIPTION: BASE PLATE
MATERIAL: EDM000136/ En8
FINISH: CHEMICAL BLACK

NOTE
HARDENED AND TEMPERED TO 60-70 kg/mm²

NOTE
HARDENED AND TEMPERED TO 60-70 kg/mm²

| | | | |
|---|---|---|---|
| SCALE 1:2 | TOLERANCES UNTOLERANCED DIMENSIONS ISO 2768-mK | DESCRIPTION | TIMING TOOL ARM |
| DRWN GHOGREYOGE | | MATERIAL | SEE NOTES |
| DATE 2026-02-19 | | FINISH | SEE NOTES |
| TECHNICAL - | | SIZE / DRAWING NUMBER / SHEET No | A2 / TDQ300177 / 2 OF 5 |
| APPR'D - | | ISSUE | 1 |

ISSUE 1
DRAWING NUMBER TDQ300177
SIZE A2
PROJECT MSR
REVISED BY: GHOGREYOGE
DATE: 2026-02-19
EC No: N/A

© COPYRIGHT EDWARDS LIMITED. THIS IS THE PROPERTY OF EDWARDS LIMITED.
IT MUST NOT BE COPIED OR OTHERWISE MADE USE OF WITHOUT WRITTEN PERMISSION.

CLASSIFICATION: CONFIDENTIAL

**IMPORTANT: REMOVE ALL BURRS AND SHARP EDGES UNLESS OTHERWISE STATED.**

**DO NOT SCALE - IF IN DOUBT ASK**

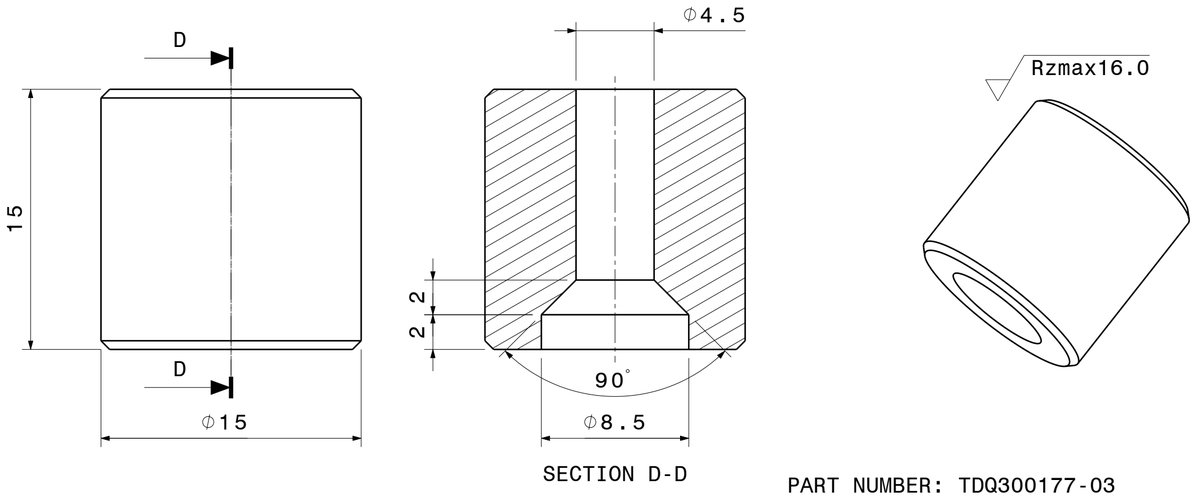


SECTION D-D

PART NUMBER: TDQ300177-03
DESCRIPTION: TIP
MATERIAL: EDM000800/ BRASS CW614N
FINISH: NATURAL

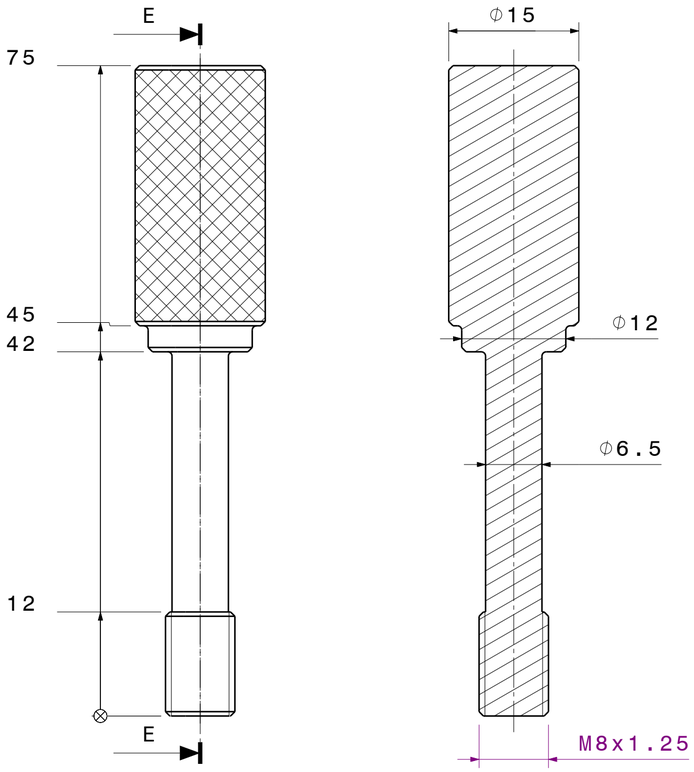


SECTION E-E

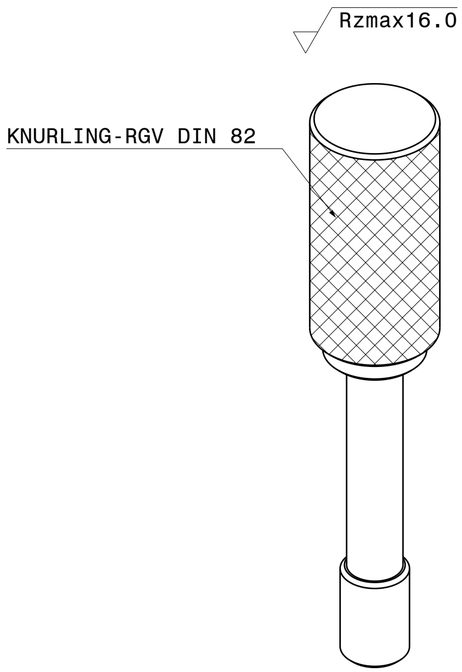


NOTE
HARDENED AND TEMPERED TO 60-70 kg/mm²

PART NUMBER: TDQ300177-04
DESCRIPTION: M8 THUMB SCREW
MATERIAL: EDM000136/ En8
FINISH: CHEMICAL BLACK

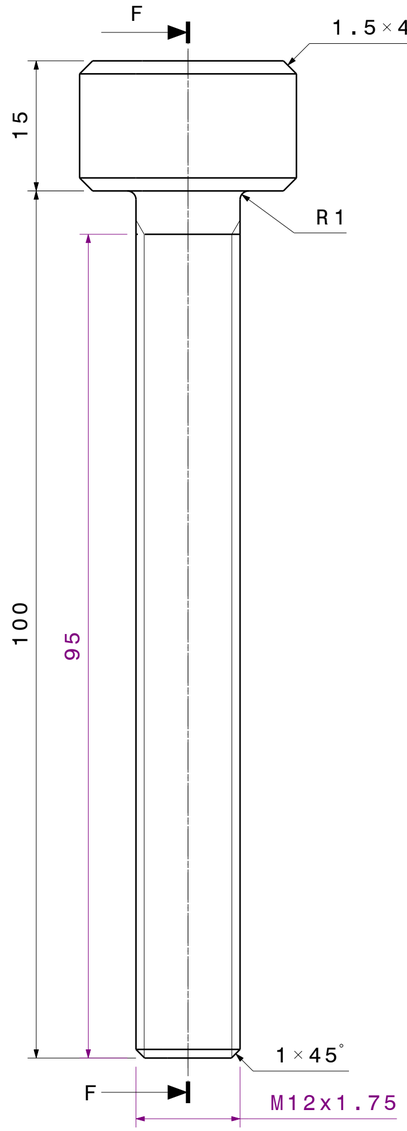


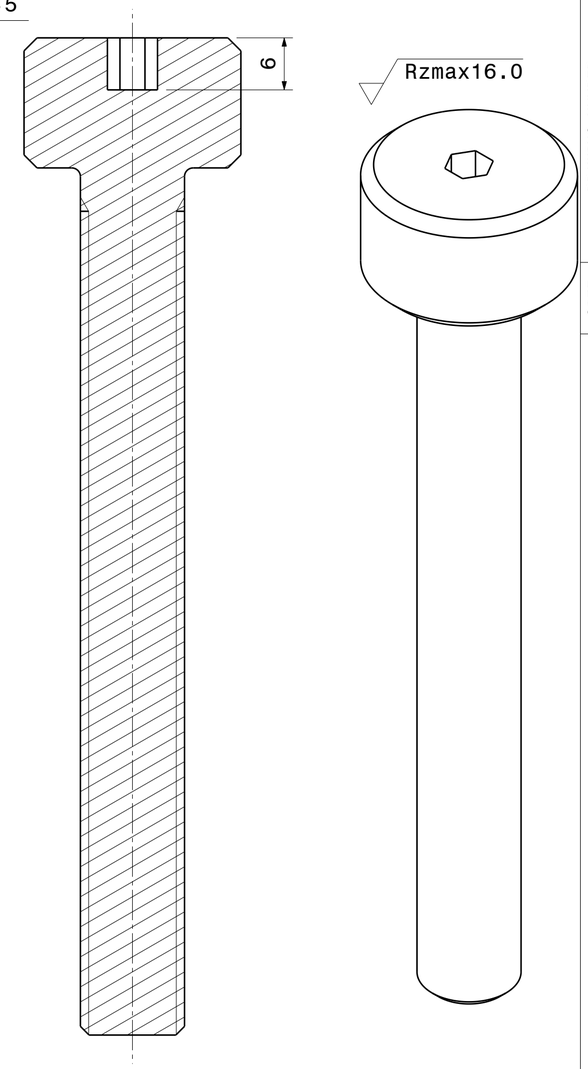


SECTION F-F

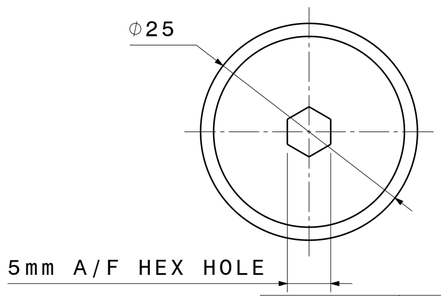


PART NUMBER: TDQ300177-05
DESCRIPTION: CLAMP SCREW
MATERIAL: EDM000136/ En8
FINISH: CHEMICAL BLACK

NOTE
HARDENED AND TEMPERED TO 60-70 kg/mm²

| | | | |
|---|---|---|---|
| SCALE 4:1 | TOLERANCES UNTOLERANCED DIMENSIONS ISO 2768-mK | DESCRIPTION | TIMING TOOL ARM |
| DRWN GHOGREYOGE | | MATERIAL | SEE NOTES |
| DATE 2026-02-19 | | FINISH | SEE NOTES |
| TECHNICAL - | | | |
| APPR'D - | | | |

| SIZE | DRAWING NUMBER | SHEET No | ISSUE |
|---|---|---|---|
| A2 | TDQ300177 | 3 OF 5 | 1 |

ISSUE 1
DRAWING NUMBER TDQ300177
SIZE A2
PROJECT MSR
REVISED BY: GHOGREYOGE
DATE: 2026-02-19
EC No: N/A

© COPYRIGHT EDWARDS LIMITED. THIS IS THE PROPERTY OF EDWARDS LIMITED.
IT MUST NOT BE COPIED OR OTHERWISE MADE USE OF WITHOUT WRITTEN PERMISSION.

CLASSIFICATION CONFIDENTIAL

**IMPORTANT: REMOVE ALL BURRS AND SHARP EDGES UNLESS OTHERWISE STATED.**

**DO NOT SCALE - IF IN DOUBT ASK**

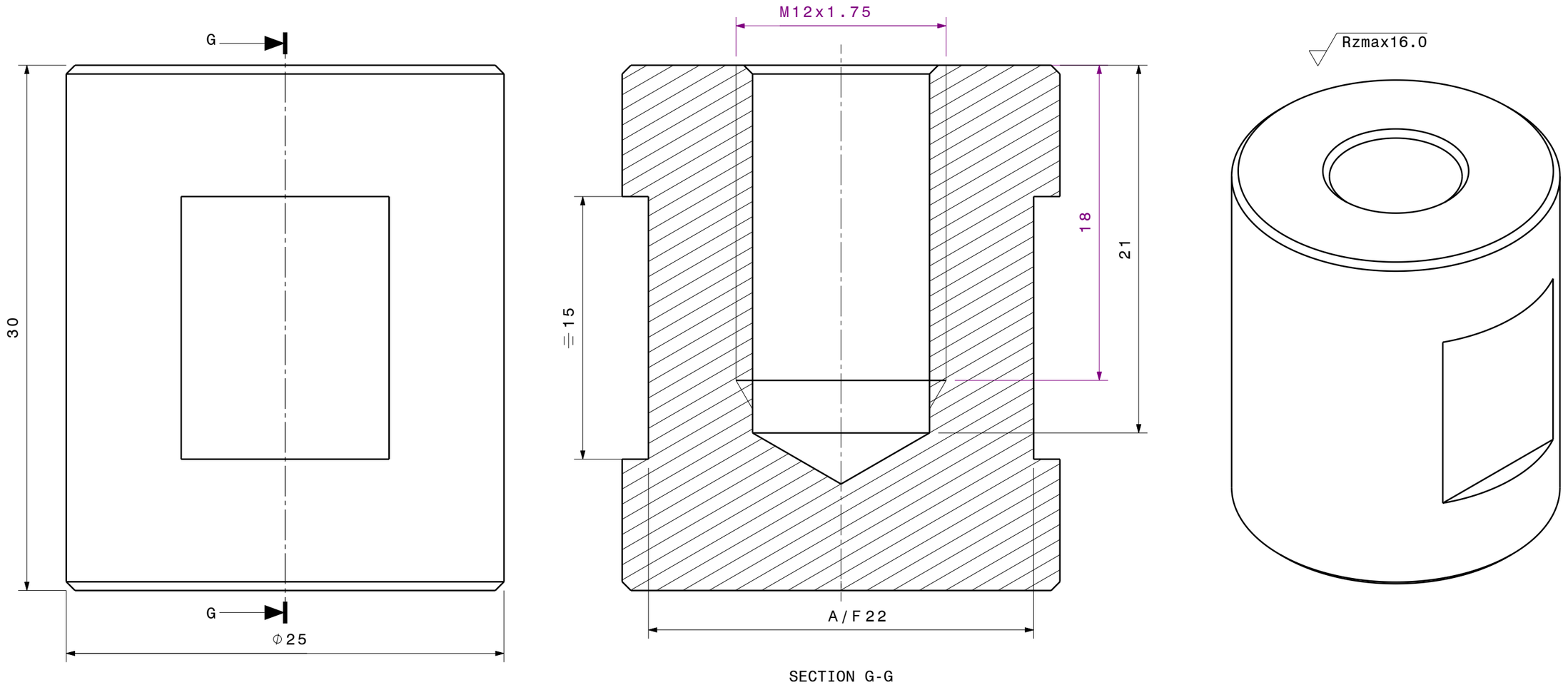


SECTION G-G

PART NUMBER: TDQ300177-06
DESCRIPTION: CLAMP SCREW
MATERIAL: EDM000800/ BRASS CW614N
FINISH: NATURAL

| | | | |
|---|---|---|---|
| SCALE 4:1 | TOLERANCES UNTOLERANCED DIMENSIONS ISO 2768-mK | DESCRIPTION | TIMING TOOL ARM |
| DRWN GHOGREYOGE | | MATERIAL | SEE NOTES |
| DATE 2026-02-19 | | FINISH | SEE NOTES |
| TECHNICAL - | | SIZE: A3 | DRAWING NUMBER: TDQ300177 |
| APPR'D - | | SHEET No: 4 OF 5 | ISSUE: 1 |

ISSUE 1
DRAWING NUMBER TDQ300177
SIZE A3
PROJECT MSR
REVISED BY: GHOGREYOGE
DATE: 2026-02-19
EC No: N/A

# HISTORY SHEET

| Iss | Revised By | Date | Approved Design | Approved Tech' | Approved Manuf' | Approved Purchas' | Approved Quality |
|---|---|---|---|---|---|---|---|
| 1 | GHOGREYOGE | 2026-02-19 | CHEN L | - | - | - | - |

**Reason for modification**

INITIAL RELEASE

| **Detail of modification** | **EC No:** N/A |
|---|---|
| FIRST RELEASE | **Approval Email :** |

ISSUE 1

DRAWING NUMBER TDQ300177

SIZE A3

PROJECT MSR

REVISED BY: GHOGREYOGE

EC No: N/A

DATE: 2026-02-19

EDWARDS

© COPYRIGHT EDWARDS LIMITED. THIS IS THE PROPERTY OF EDWARDS LIMITED.
IT MUST NOT BE COPIED OR OTHERWISE MADE USE OF WITHOUT WRITTEN PERMISSION.

| DESCRIPTION | DRAWING NUMBER | SHEET No | ISSUE |
|---|---|---|---|
| TIMING TOOL ARM | TDQ300177 | 5 OF 5 | 1 |