© COPYRIGHT EDWARDS LIMITED. THIS IS THE PROPERTY OF EDWARDS LIMITED.
IT MUST NOT BE COPIED OR OTHERWISE MADE USE OF WITHOUT WRITTEN PERMISSION.

CLASSIFICATION CONFIDENTIAL

IMPORTANT: REMOVE ALL BURRS AND SHARP EDGES UNLESS OTHERWISE STATED.

DO NOT SCALE - IF IN DOUBT ASK

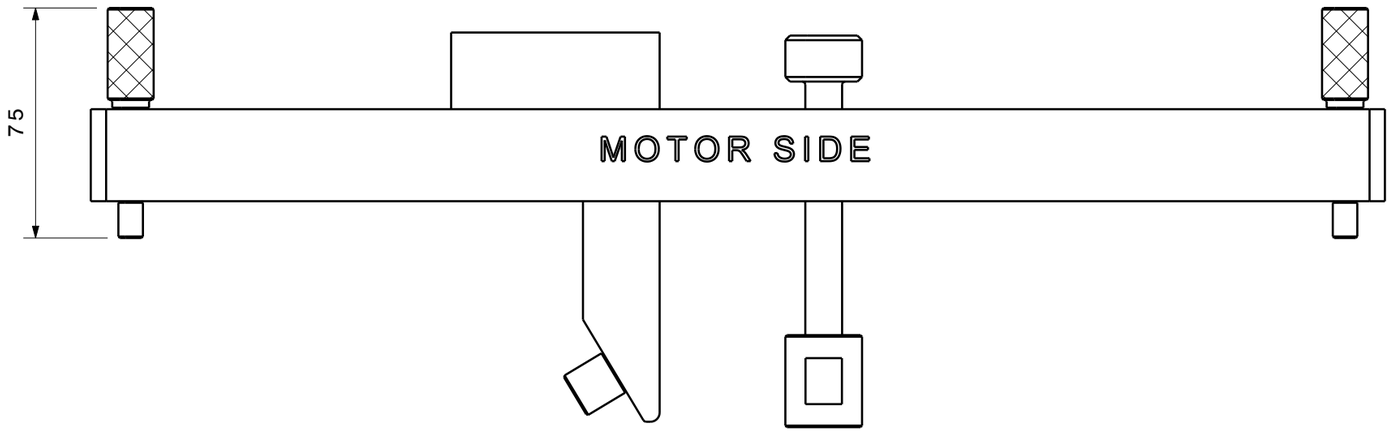

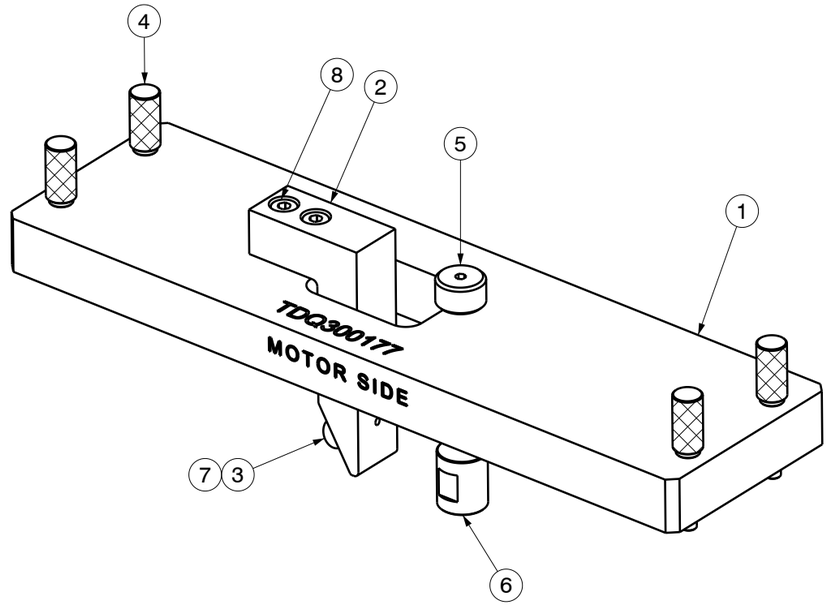

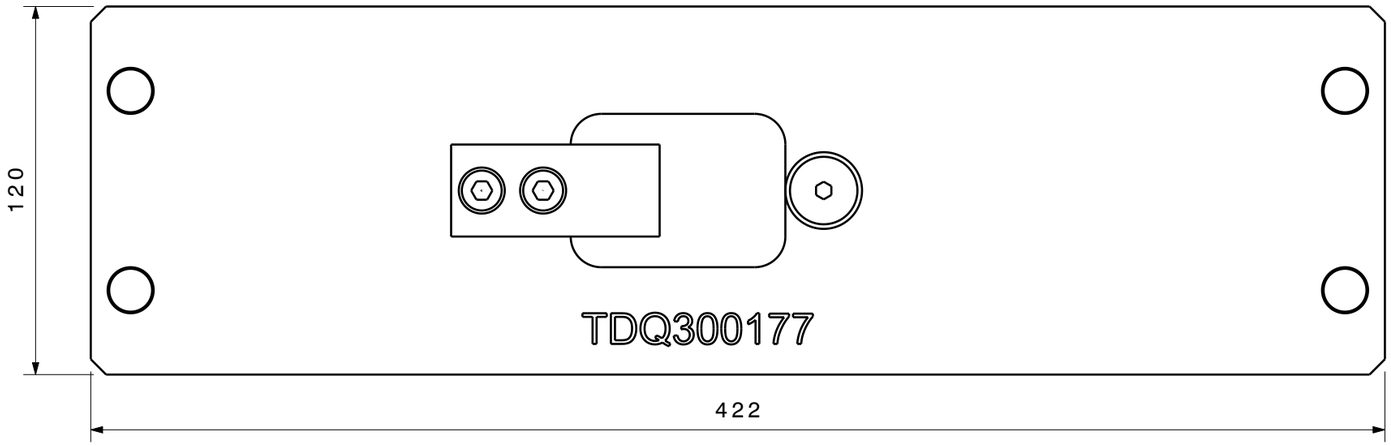

ITEM	PART NUMBER	DESCRIPTION	QTY
8	218231413	M8X30 SOC HD CAP SCREW SS	2
7	TDQ300177-07	SCREW M4 X 20 CSK SKT HD SCREW	1
6	TDQ300177-06	CLAMP TIP	1
5	TDQ300177-05	CLAMP SCREW	1
4	TDQ300177-04	M8 THUMB SCREW	4
3	TDQ300177-03	TIP	1
2	TDQ300177-02	TIMING TOOL ARM	1
1	TDQ300177-01	BASE PLATE	1

SCALE 1:3
DRWN GHOGREYOGE
DATE 2026-02-19
TECHNICAL -
APPR'D -

TOLERANCES
UNTOLERANCED DIMENSIONS
ISO 2768-mK

DESCRIPTION: TIMING TOOL ARM
MATERIAL: SEE NOTES
FINISH: SEE NOTES

SIZE	DRAWING NUMBER	SHEET No
A3	TDQ300177	1 OF 5

ISSUE 1
DRAWING NUMBER TDQ300177
SIZE A3
PROJECT MSR
REVISED BY: GHOGREYOGE
DATE: 2026-02-19
EC No: N/A
ISSUE 1

BELOW GENERAL NOTES ARE APPLICABLE TO PARTS DRAWN ON SHEET 2 TO SHEET 4
1. ALL UNSPECIFIED EDGE CHAMFER 0.5x45°MAX
2. ALL UNSPECIFIED CORNER R0.5MAX

© COPYRIGHT EDWARDS LIMITED. THIS IS THE PROPERTY OF EDWARDS LIMITED.
IT MUST NOT BE COPIED OR OTHERWISE MADE USE OF WITHOUT WRITTEN PERMISSION.

CLASSIFICATION CONFIDENTIAL

IMPORTANT: REMOVE ALL BURRS AND SHARP EDGES UNLESS OTHERWISE STATED.

DO NOT SCALE - IF IN DOUBT ASK

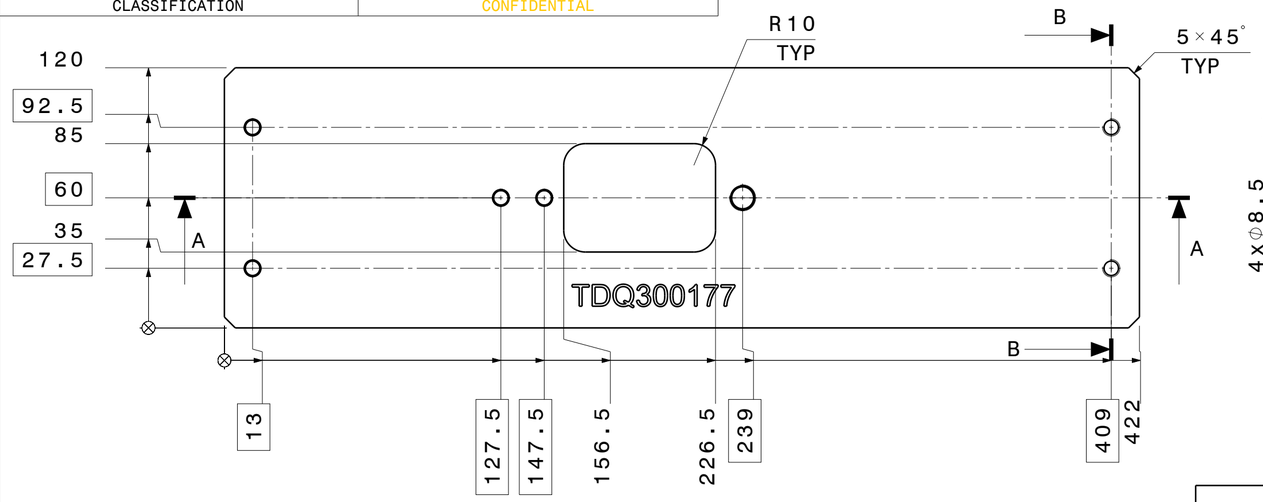

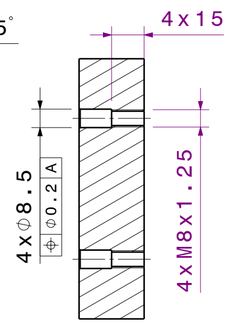

SECTION B-B

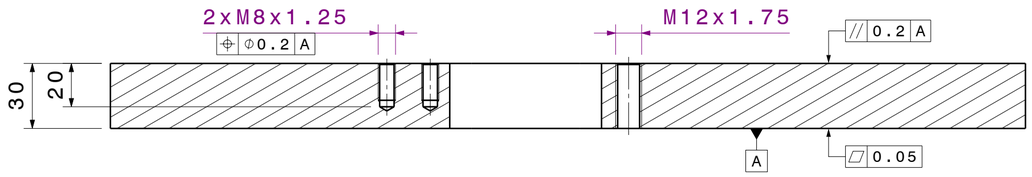

SECTION A-A

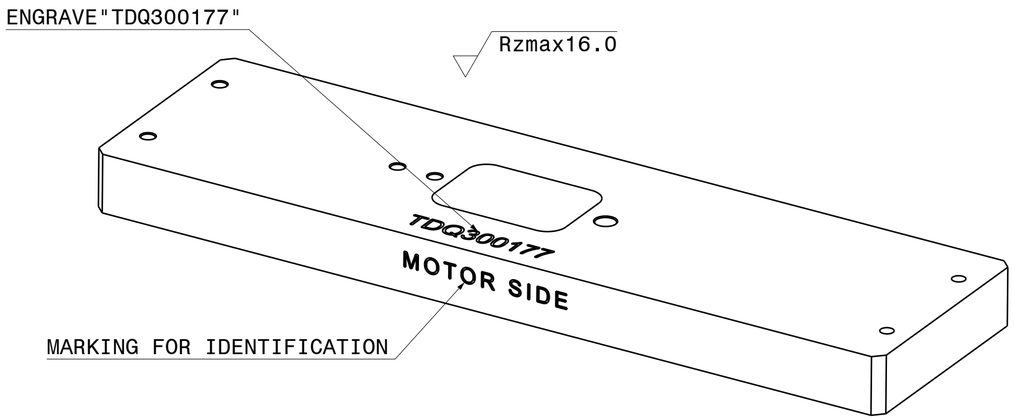

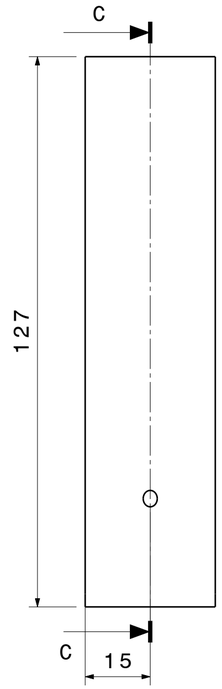

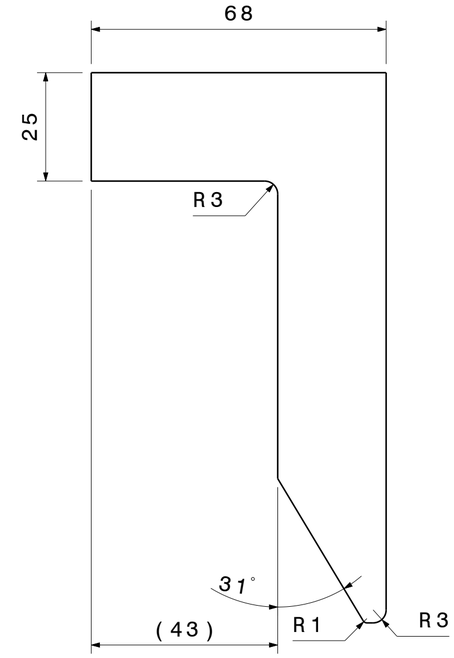

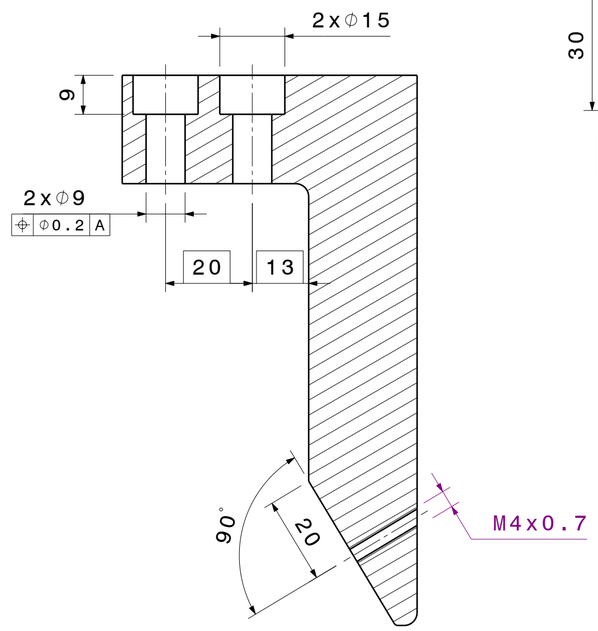

SECTION C-C

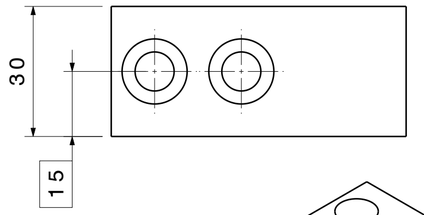

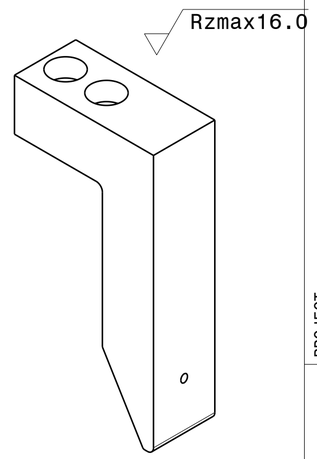

PART NUMBER: TDQ300177-02
DESCRIPTION: TIMING TOOL ARM
MATERIAL: EDM000136/ En8
FINISH: CHEMICAL BLACK

PART NUMBER: TDQ300177-01
DESCRIPTION: BASE PLATE
MATERIAL: EDM000136/ En8
FINISH: CHEMICAL BLACK

NOTE
HARDENED AND TEMPERED TO 60-70 kg/mm²

NOTE
HARDENED AND TEMPERED TO 60-70 kg/mm²

SCALE 1:2	TOLERANCES UNTOLERANCED DIMENSIONS ISO 2768-mK	DESCRIPTION	TIMING TOOL ARM
DRWN GHOGREYOGE		MATERIAL	SEE NOTES
DATE 2026-02-19		FINISH	SEE NOTES
TECHNICAL -		SIZE / DRAWING NUMBER / SHEET No	A2 / TDQ300177 / 2 OF 5
APPR'D -		ISSUE	1

ISSUE 1
DRAWING NUMBER TDQ300177
SIZE A2
PROJECT MSR
REVISED BY: GHOGREYOGE
DATE: 2026-02-19
EC No: N/A

© COPYRIGHT EDWARDS LIMITED. THIS IS THE PROPERTY OF EDWARDS LIMITED.
IT MUST NOT BE COPIED OR OTHERWISE MADE USE OF WITHOUT WRITTEN PERMISSION.

CLASSIFICATION: CONFIDENTIAL

IMPORTANT: REMOVE ALL BURRS AND SHARP EDGES UNLESS OTHERWISE STATED.

DO NOT SCALE - IF IN DOUBT ASK

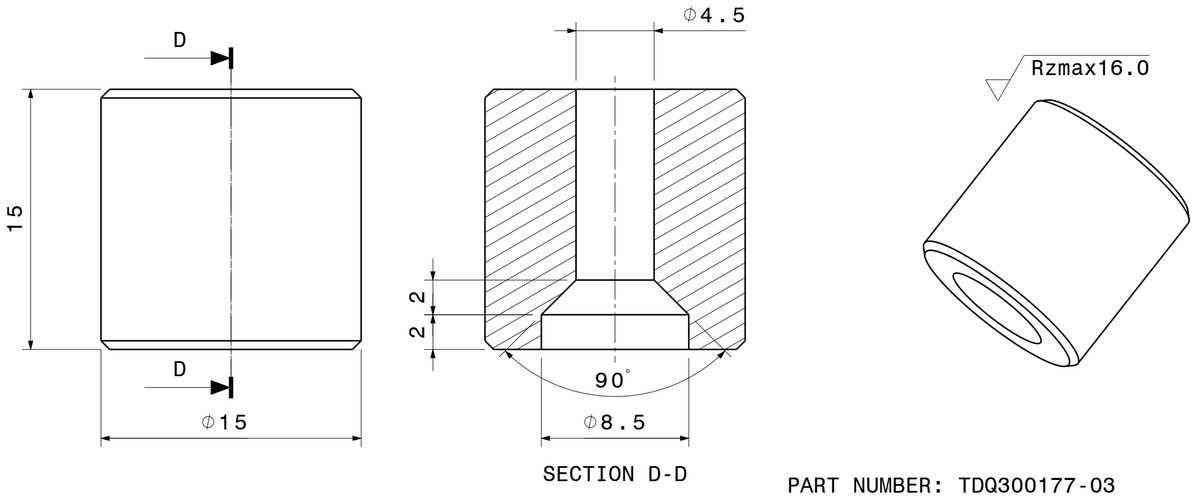

SECTION D-D

PART NUMBER: TDQ300177-03
DESCRIPTION: TIP
MATERIAL: EDM000800/ BRASS CW614N
FINISH: NATURAL

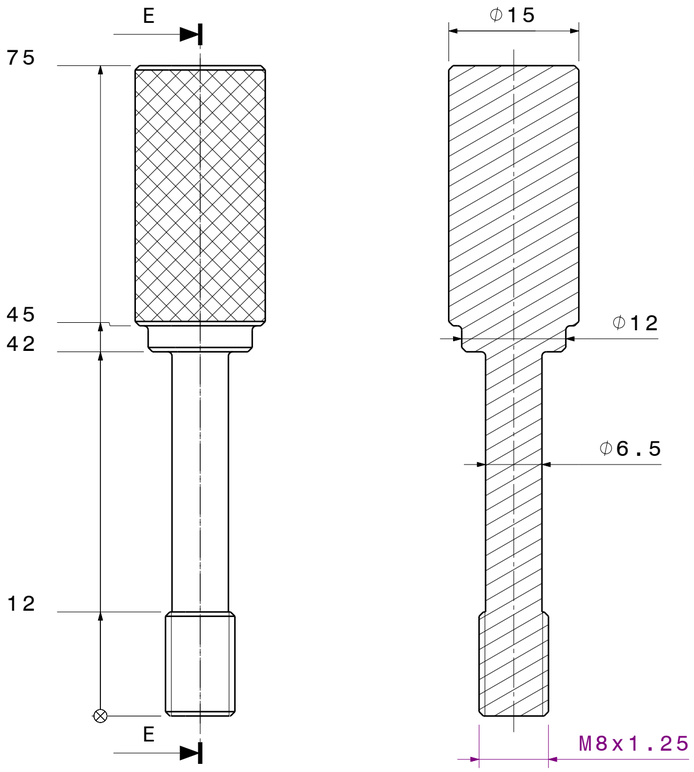

SECTION E-E

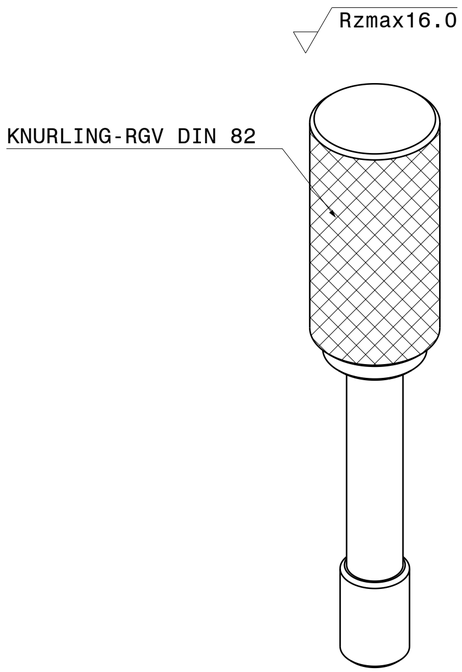

NOTE
HARDENED AND TEMPERED TO 60-70 kg/mm²

PART NUMBER: TDQ300177-04
DESCRIPTION: M8 THUMB SCREW
MATERIAL: EDM000136/ En8
FINISH: CHEMICAL BLACK

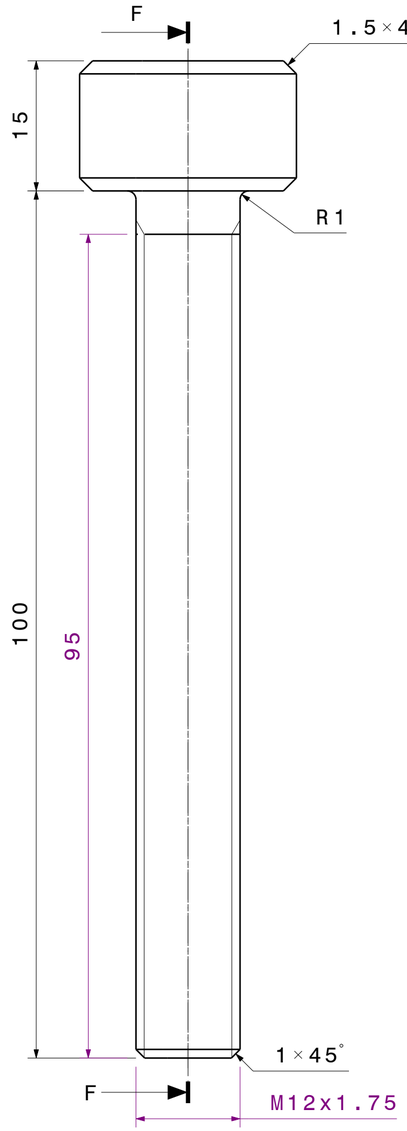

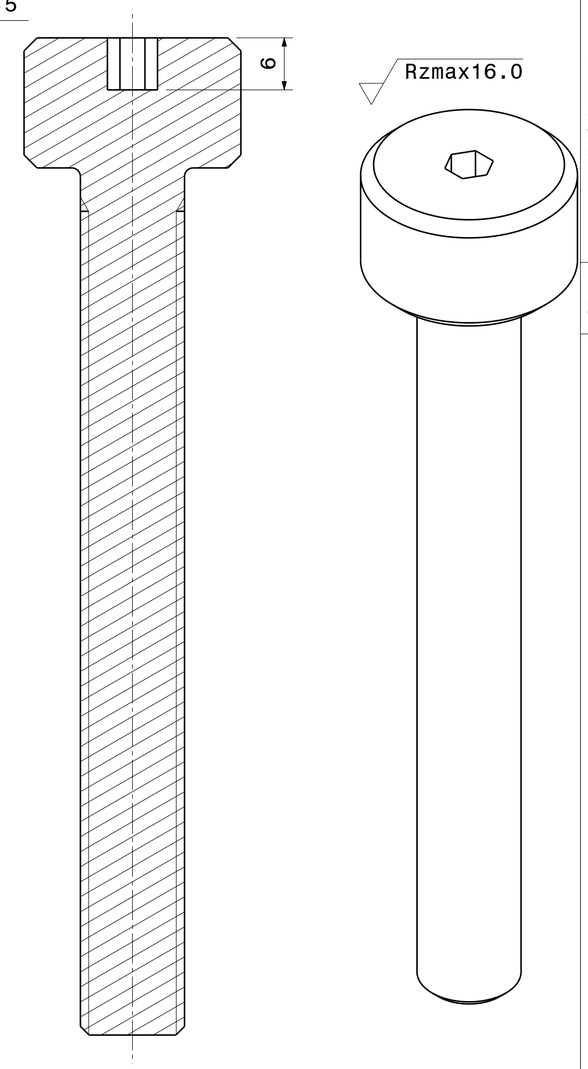

SECTION F-F

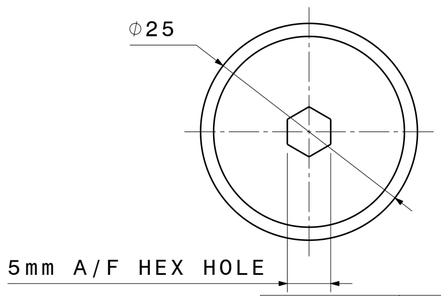

PART NUMBER: TDQ300177-05
DESCRIPTION: CLAMP SCREW
MATERIAL: EDM000136/ En8
FINISH: CHEMICAL BLACK

NOTE
HARDENED AND TEMPERED TO 60-70 kg/mm²

SCALE 4:1	TOLERANCES UNTOLERANCED DIMENSIONS ISO 2768-mK	DESCRIPTION	TIMING TOOL ARM
DRWN GHOGREYOGE		MATERIAL	SEE NOTES
DATE 2026-02-19		FINISH	SEE NOTES
TECHNICAL -			
APPR'D -			

SIZE	DRAWING NUMBER	SHEET No	ISSUE
A2	TDQ300177	3 OF 5	1

ISSUE 1
DRAWING NUMBER TDQ300177
SIZE A2
PROJECT MSR
REVISED BY: GHOGREYOGE
DATE: 2026-02-19
EC No: N/A

© COPYRIGHT EDWARDS LIMITED. THIS IS THE PROPERTY OF EDWARDS LIMITED.
IT MUST NOT BE COPIED OR OTHERWISE MADE USE OF WITHOUT WRITTEN PERMISSION.

CLASSIFICATION CONFIDENTIAL

IMPORTANT: REMOVE ALL BURRS AND SHARP EDGES UNLESS OTHERWISE STATED.

DO NOT SCALE - IF IN DOUBT ASK

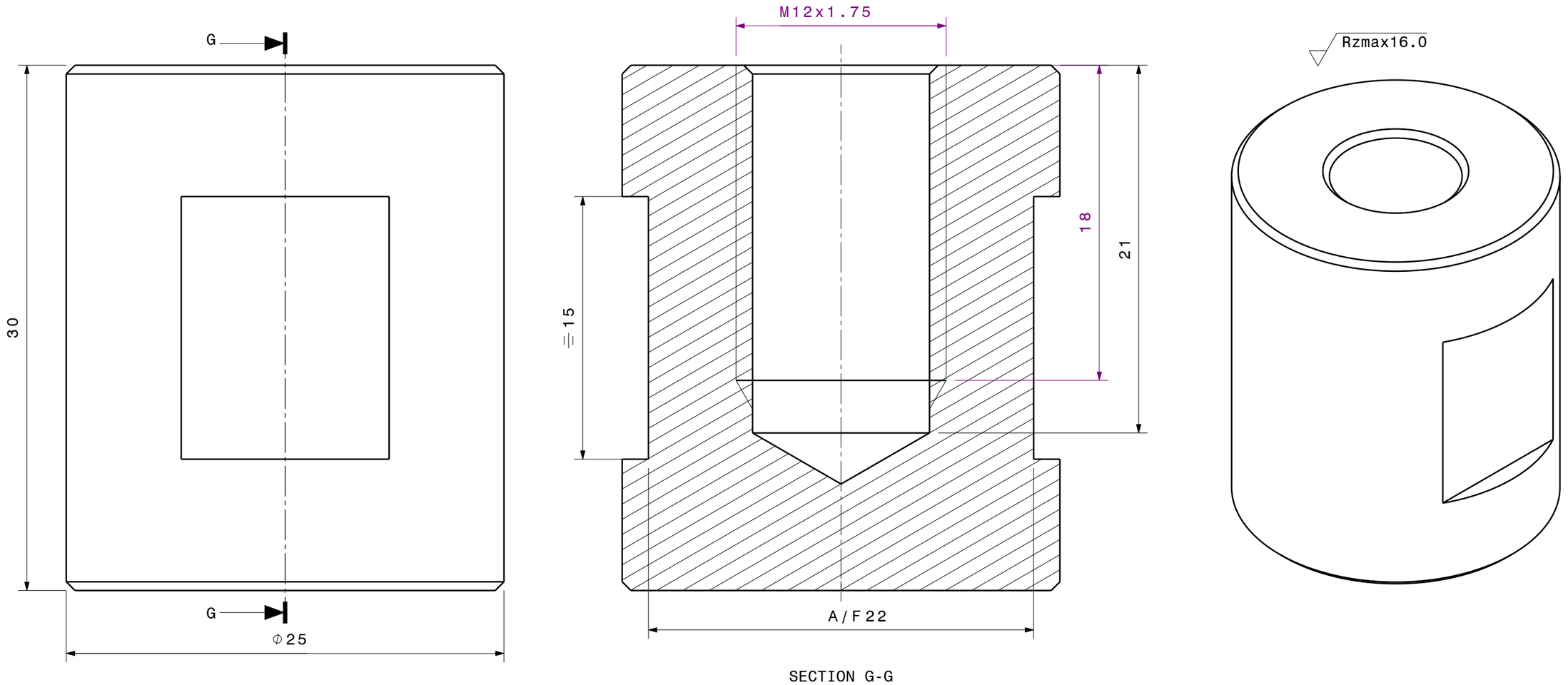

SECTION G-G

PART NUMBER: TDQ300177-06
DESCRIPTION: CLAMP SCREW
MATERIAL: EDM000800/ BRASS CW614N
FINISH: NATURAL

SCALE 4:1	TOLERANCES UNTOLERANCED DIMENSIONS ISO 2768-mK	DESCRIPTION	TIMING TOOL ARM
DRWN GHOGREYOGE		MATERIAL	SEE NOTES
DATE 2026-02-19		FINISH	SEE NOTES
TECHNICAL -		SIZE: A3	DRAWING NUMBER: TDQ300177
APPR'D -		SHEET No: 4 OF 5	ISSUE: 1

ISSUE 1
DRAWING NUMBER TDQ300177
SIZE A3
PROJECT MSR
REVISED BY: GHOGREYOGE
DATE: 2026-02-19
EC No: N/A

HISTORY SHEET

Iss	Revised By	Date	Approved Design	Approved Tech'	Approved Manuf'	Approved Purchas'	Approved Quality
1	GHOGREYOGE	2026-02-19	CHEN L	-	-	-	-

Reason for modification

INITIAL RELEASE

Detail of modification	**EC No:** N/A
FIRST RELEASE	**Approval Email :**

ISSUE 1

DRAWING NUMBER TDQ300177

SIZE A3

PROJECT MSR

REVISED BY: GHOGREYOGE

EC No: N/A

DATE: 2026-02-19

EDWARDS

© COPYRIGHT EDWARDS LIMITED. THIS IS THE PROPERTY OF EDWARDS LIMITED.
IT MUST NOT BE COPIED OR OTHERWISE MADE USE OF WITHOUT WRITTEN PERMISSION.

DESCRIPTION	DRAWING NUMBER	SHEET No	ISSUE
TIMING TOOL ARM	TDQ300177	5 OF 5	1