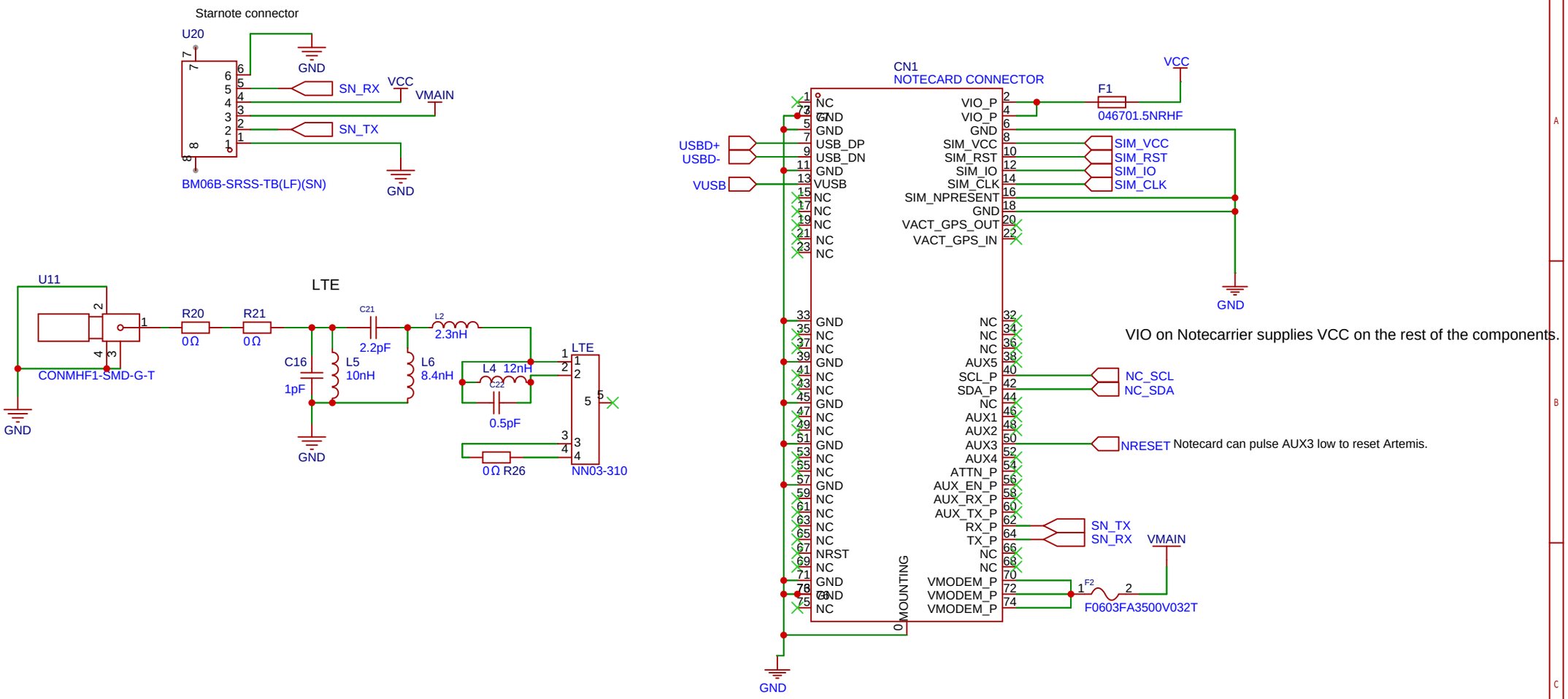

Page Name	Notecard, Antennas		
Schematic	sfy4_0_1		
Drawn by	EasyEDA		
VERSION	V0.1	Proj. Name	sfy4
Meteorologisk institutt	SIZE	This is PAGE # 1 OF 6	
	A4	Update Date	2026-02-23
		Create Date	2026-02-23

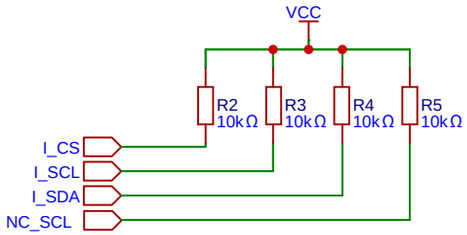

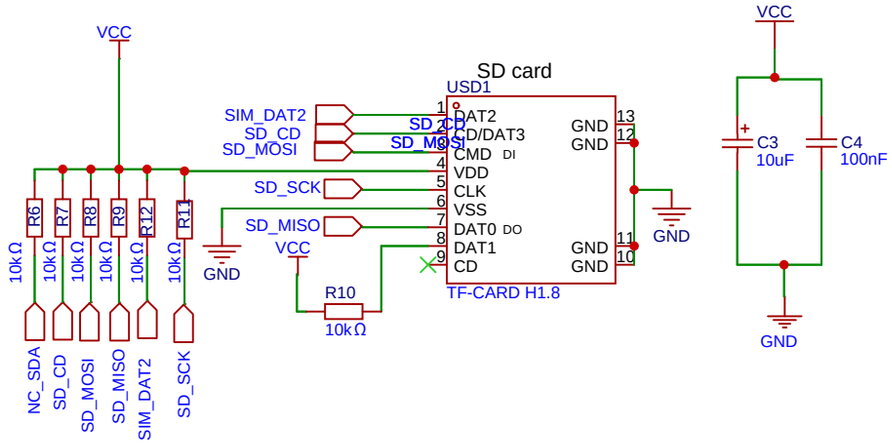

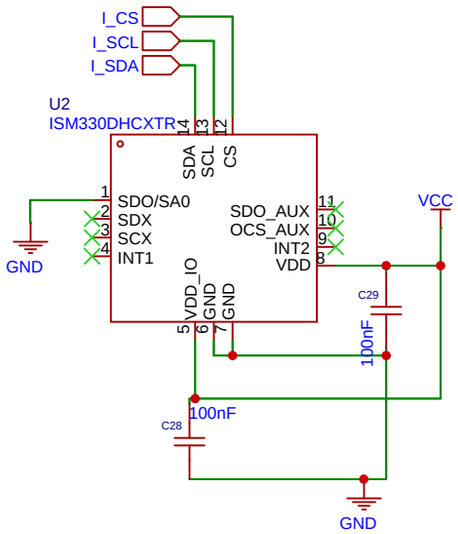

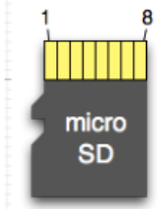

Pin	SD	SPI
1	DAT2	X
2	CD/DAT3	CS
3	CMD	DI
4	VDD	VDD
5	CLK	SCLK
6	VSS	VSS
7	DAT0	DO
8	DAT1	X

Page Name	IMU, Thermistor, SD card		
Schematic	sfy4_0_1		
Drawn by	EasyEDA		
VERSION	V0.1	Proj. Name	sfy4
Meteorologisk institutt	SIZE	This is PAGE #	2 OF 6
	A4	Update Date	2026-02-23
		Create Date	2026-02-23

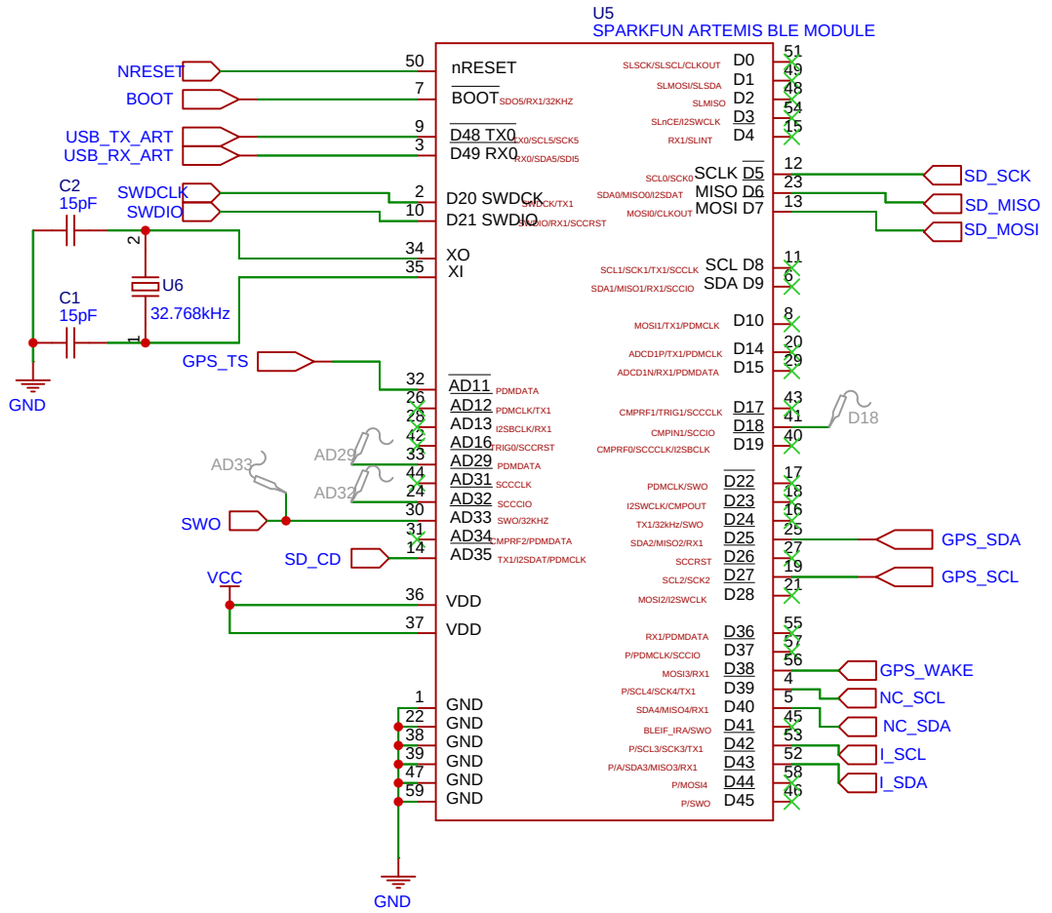

JTAG / SWD debug & programmer

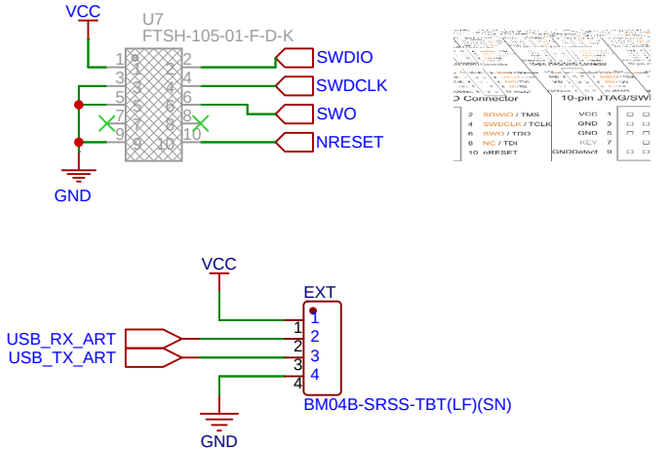

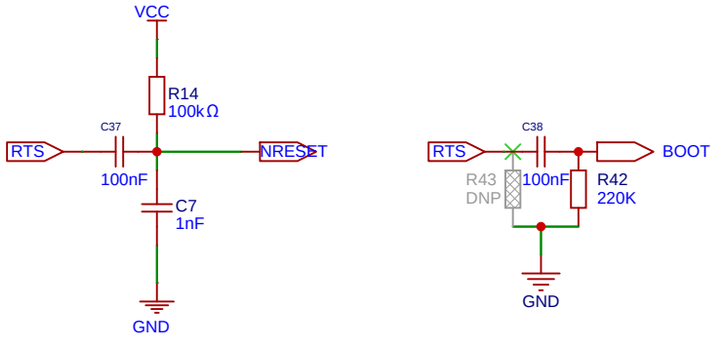

Page Name	MCU (Artemis)		
Schematic	sfy4_0_1		
Drawn by	EasyEDA		
VERSION	V0.1	Proj. Name	sfy4
Meteorologisk institutt	SIZE	This is PAGE #	3 OF 6
	A4	Update Date	2026-02-23
		Create Date	2026-02-23

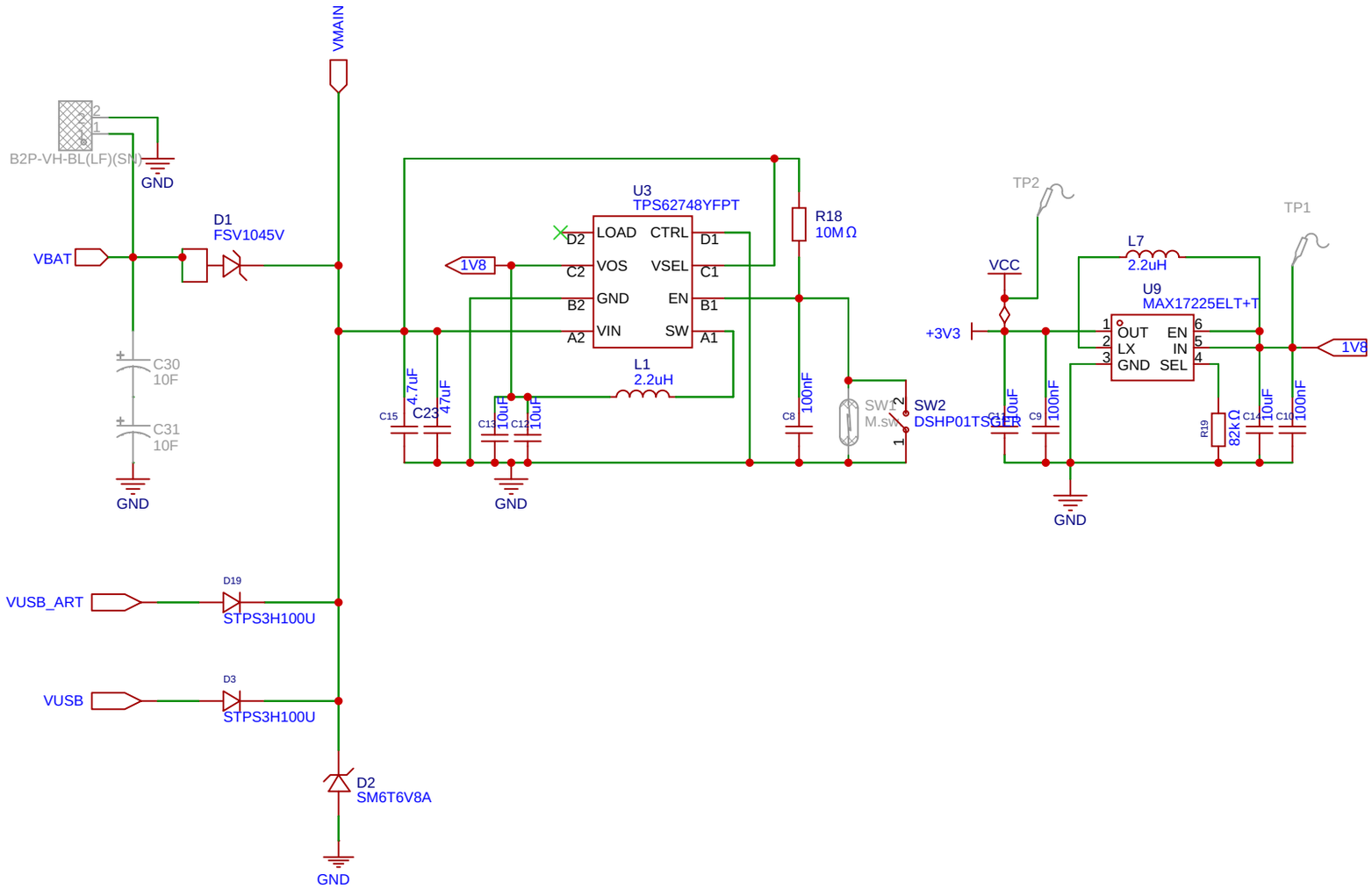

Page Name	Power		
Schematic	sfy4_0_1		
Drawn by	EasyEDA		
VERSION	V0.1	Proj. Name	sfy4
Meteorologisk institutt	SIZE	This is PAGE # 4 OF 6	
	A4	Update Date	2026-02-23
		Create Date	2026-02-23

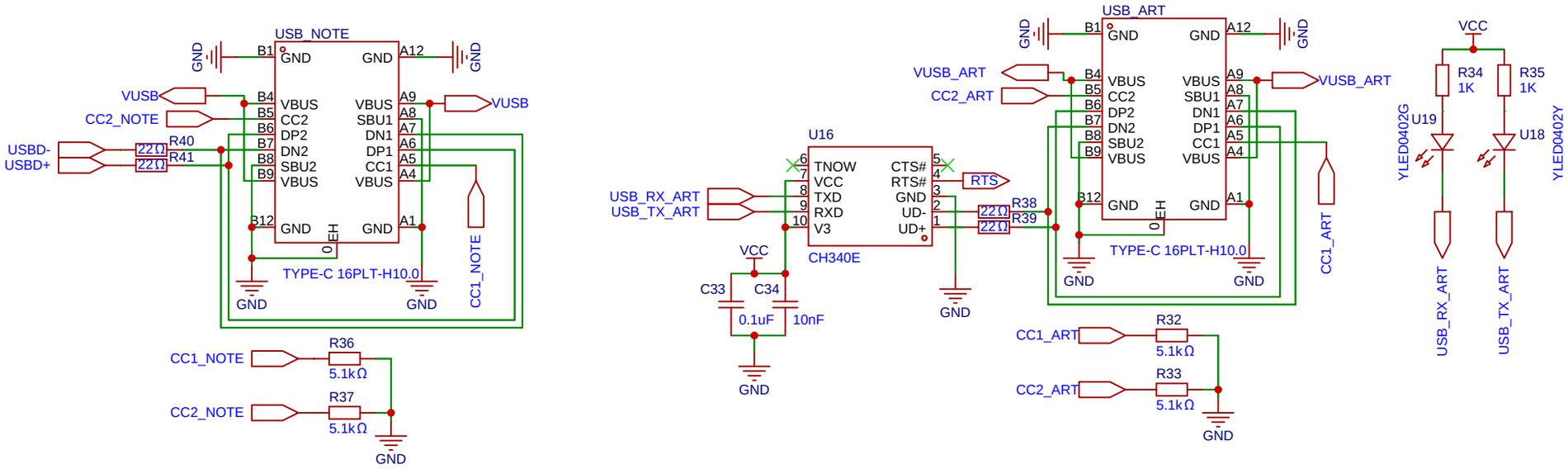

Page Name	USB		
Schematic	sfy4_0_1		
Drawn by	EasyEDA		
VERSION	V0.1	Proj. Name	sfy4
Meteorologisk institutt	SIZE	This is PAGE # 5 OF 6	
	A4	Update Date	2026-02-24
		Create Date	2026-02-23

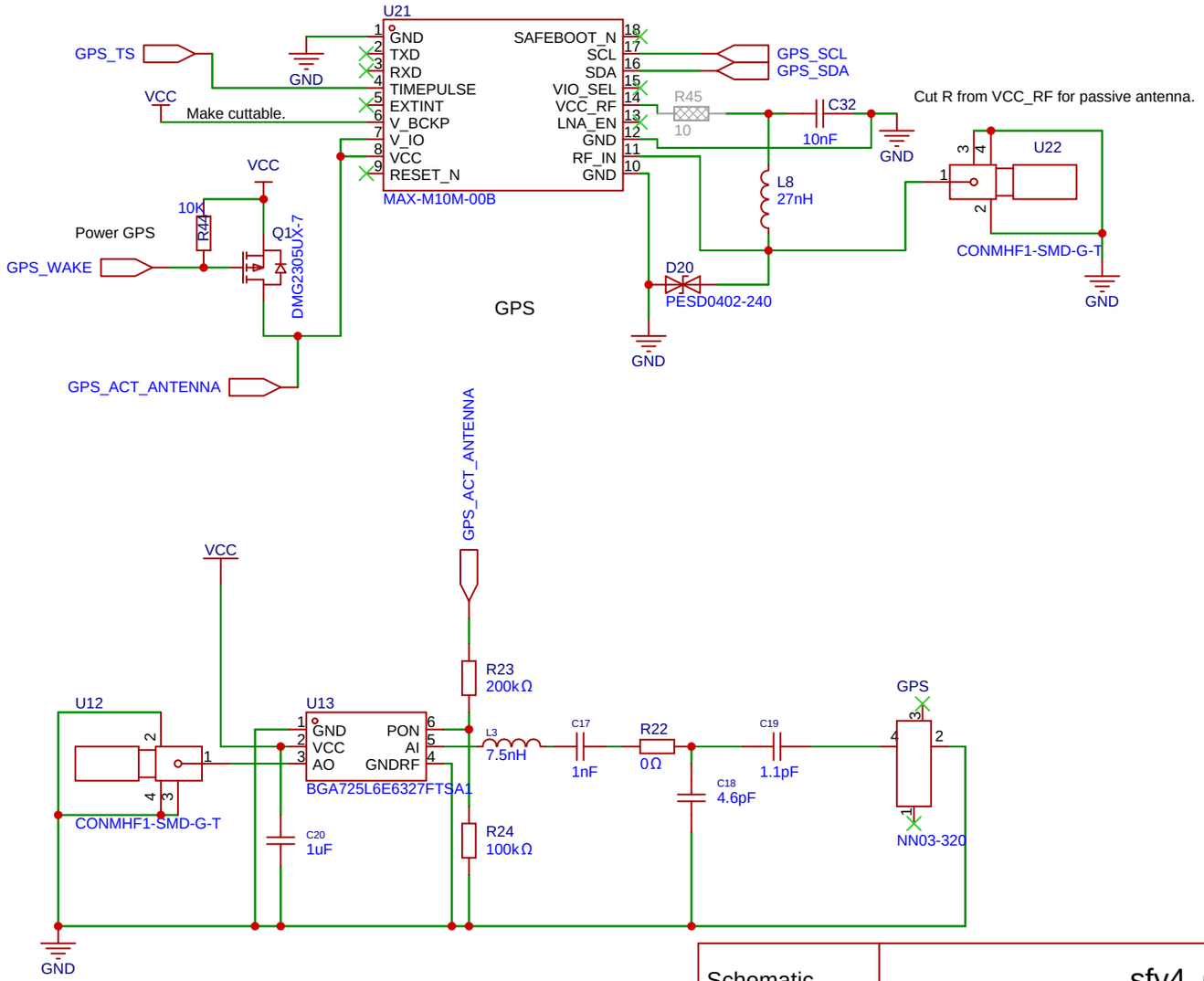

Schematic	sfy4_0_1	Create at	2026-02-23
		Update at	2026-02-23
Board	sfy4_0_1	Page	GPS
Drawn		sfy4	
Reviewed			
		Version	Size	Page 6 Total 6
EasyEDA		V1.0	A4	EasyEDA.com