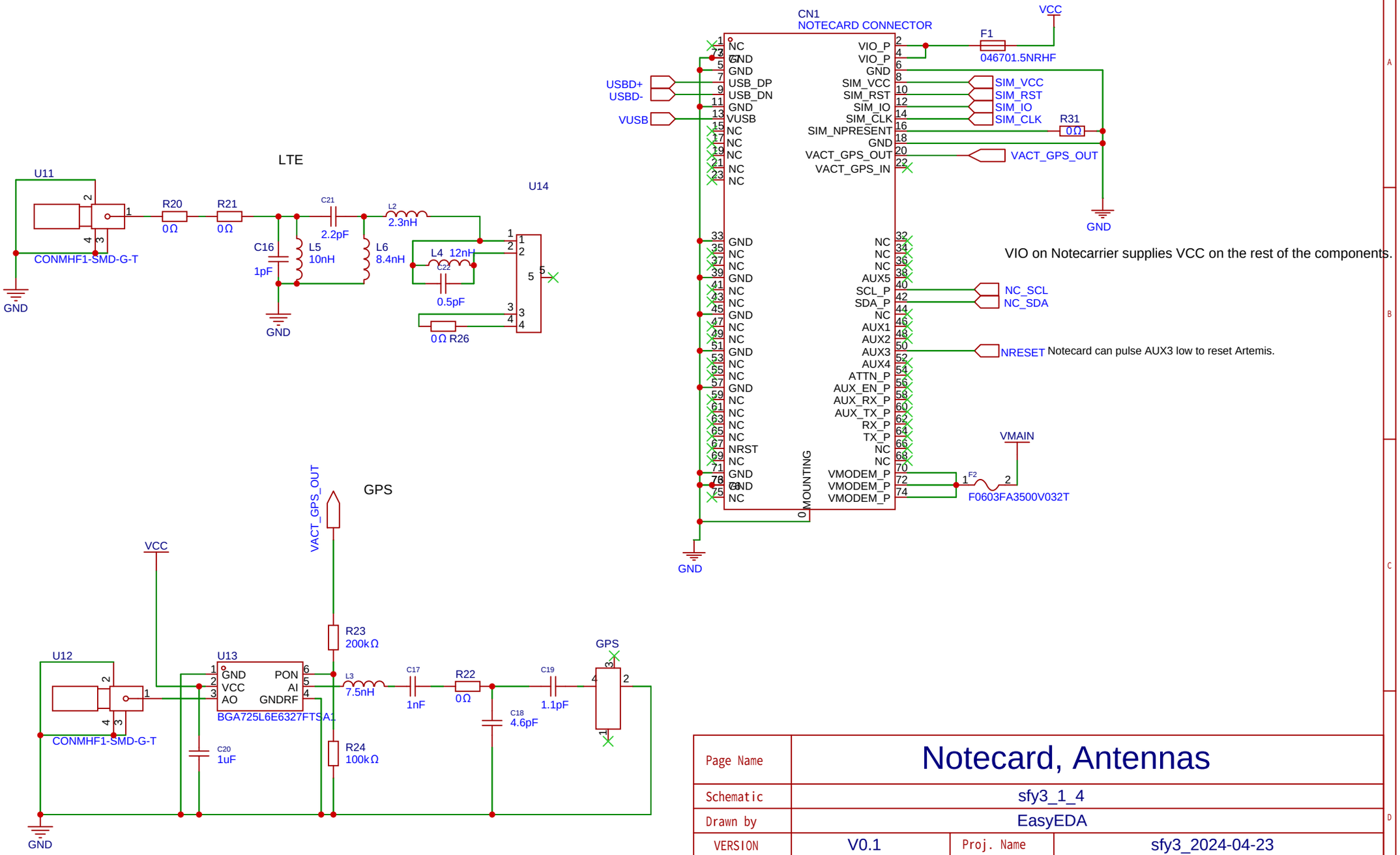

Page Name	Notecard, Antennas		
Schematic	sfy3_1_4		
Drawn by	EasyEDA		
VERSION	V0.1	Proj. Name	sfy3_2024-04-23
Meteorologisk institutt		SIZE	This is PAGE # 1 OF 5
		A4	Update Date 2026-02-09
			Create Date 2026-01-19

NN03-310

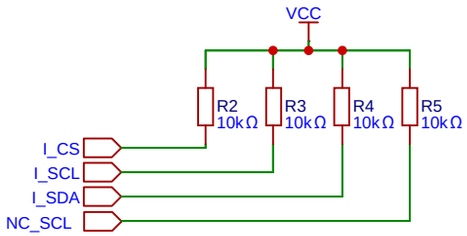

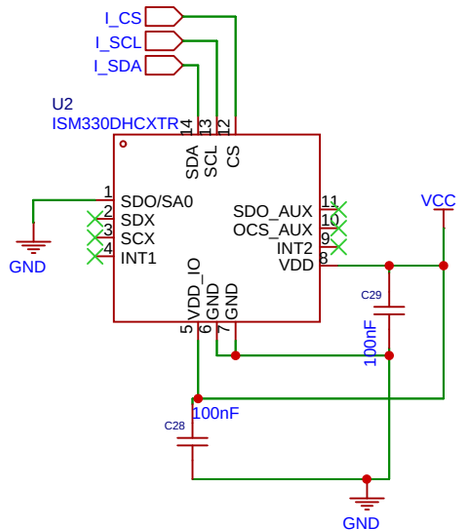

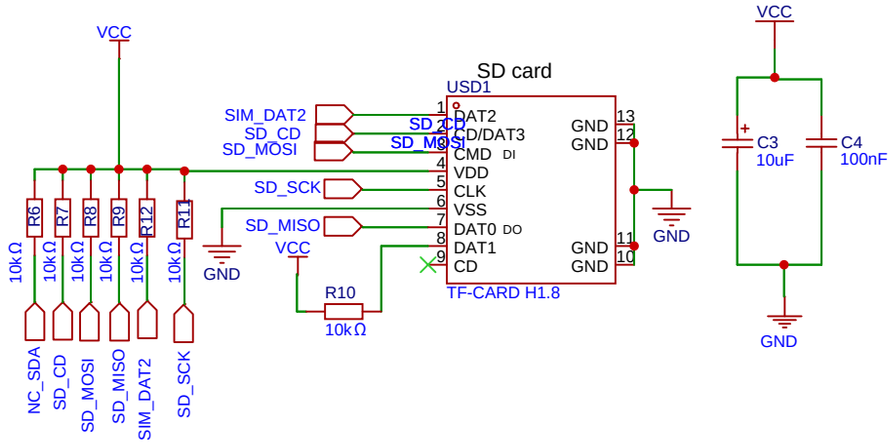

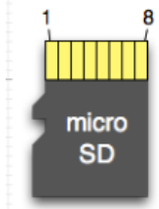

Pin	SD	SPI
1	DAT2	X
2	CD/DAT3	CS
3	CMD	DI
4	VDD	VDD
5	CLK	SCLK
6	VSS	VSS
7	DAT0	DO
8	DAT1	X

Page Name	IMU, Thermistor, SD card		
Schematic	sfy3_1_4		
Drawn by	EasyEDA		
VERSION	V0.1	Proj. Name	sfy3_2024-04-23
Meteorologisk institutt	SIZE	This is PAGE # 2 OF 5	
	A4	Update Date	2026-01-19
		Create Date	2026-01-19

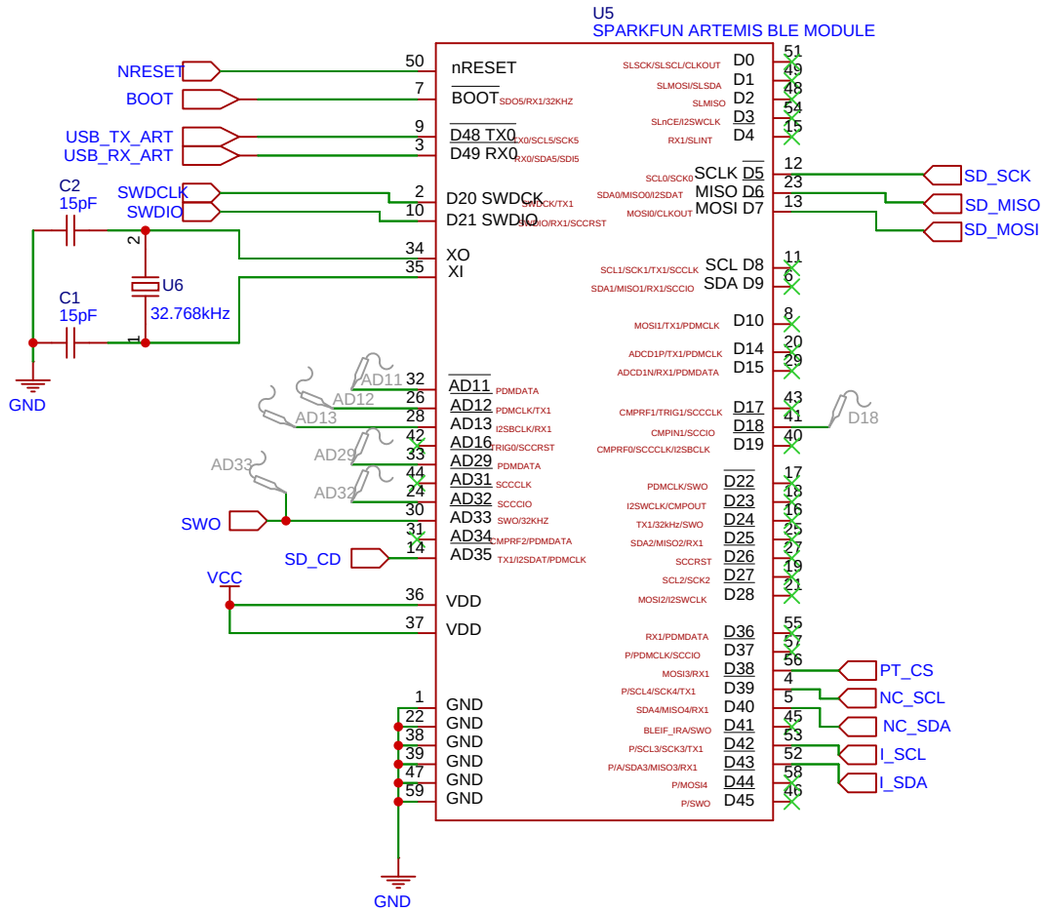

JTAG / SWD debug & programmer

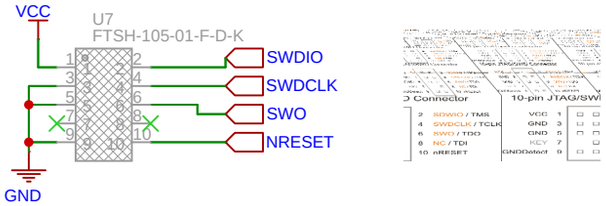

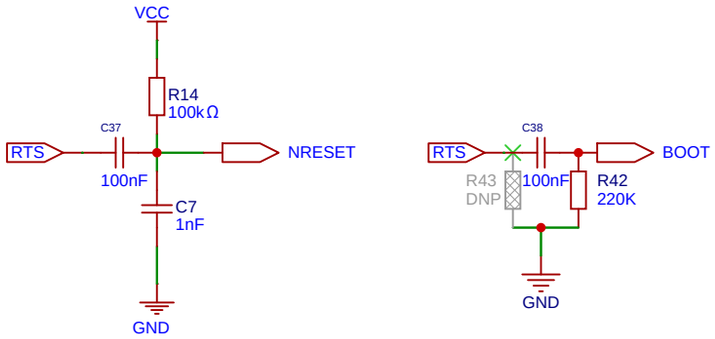

Page Name	MCU (Artemis)		
Schematic	sfy3_1_4		
Drawn by	EasyEDA		
VERSION	V0.1	Proj. Name	sfy3_2024-04-23
Meteorologisk institutt		SIZE	This is PAGE # 3 OF 5
		A4	Update Date 2026-01-19
			Create Date 2026-01-19

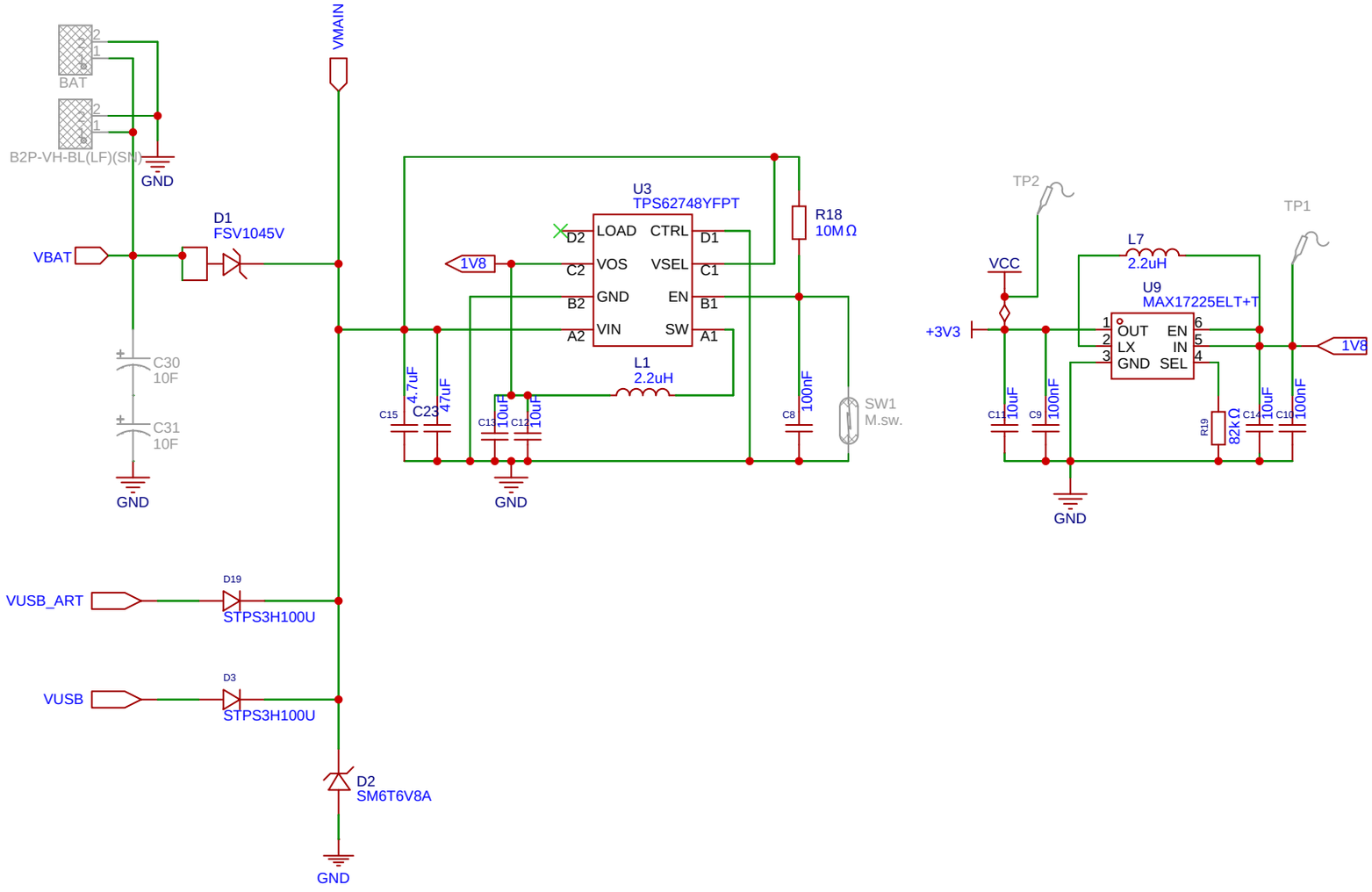

Page Name	Power		
Schematic	sfy3_1_4		
Drawn by	EasyEDA		
VERSION	V0.1	Proj. Name	sfy3_2024-04-23
Meteorologisk institutt	SIZE	This is PAGE # 4 OF 5	
	A4	Update Date	2026-01-19
		Create Date	2026-01-19

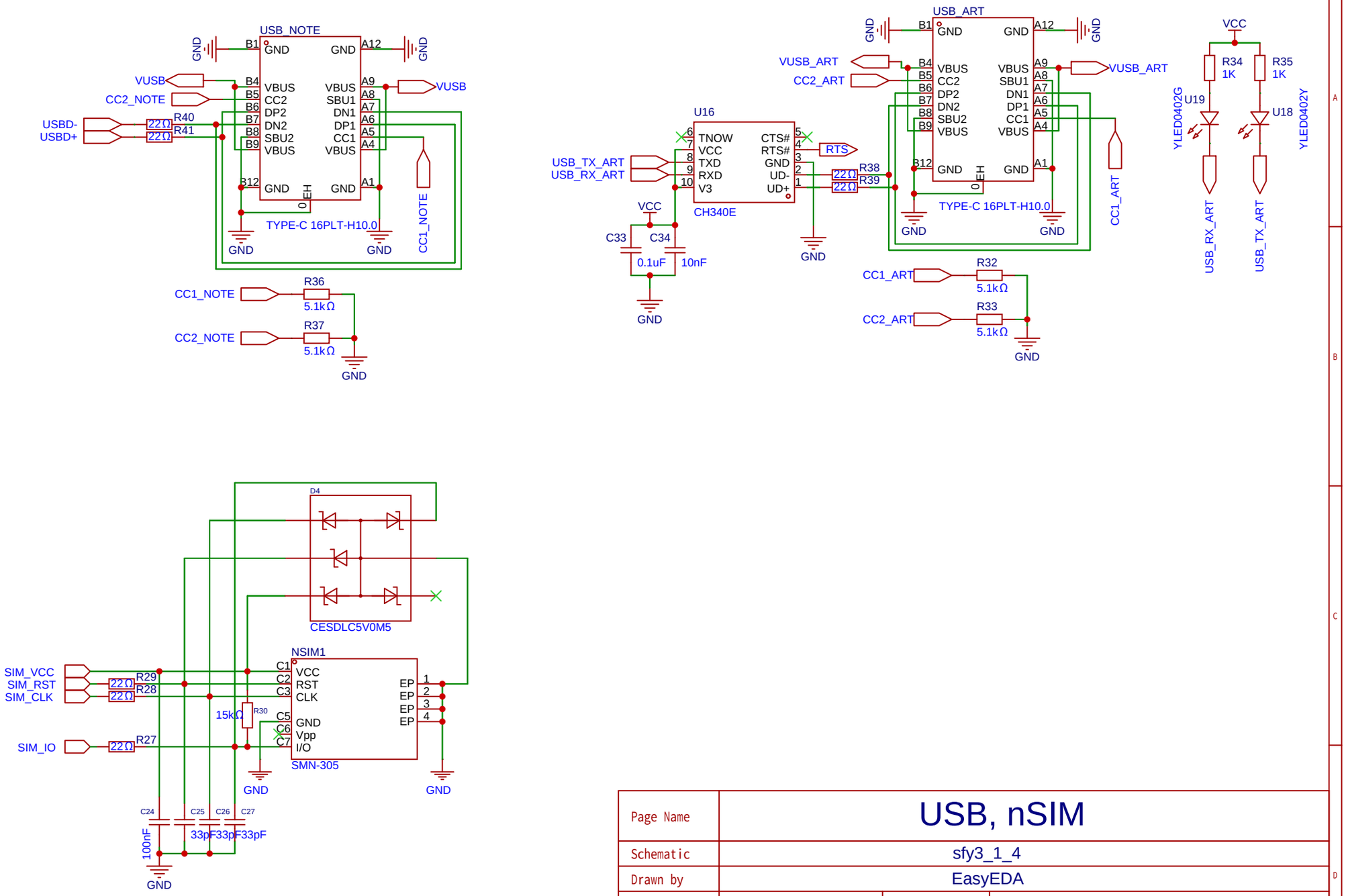

Page Name	USB, nSIM		
Schematic	sfy3_1_4		
Drawn by	EasyEDA		
VERSION	V0.1	Proj. Name	sfy3_2024-04-23
Meteorologisk institutt	SIZE	This is PAGE # 5 OF 5	
	A4	Update Date	2026-01-19
		Create Date	2026-01-19