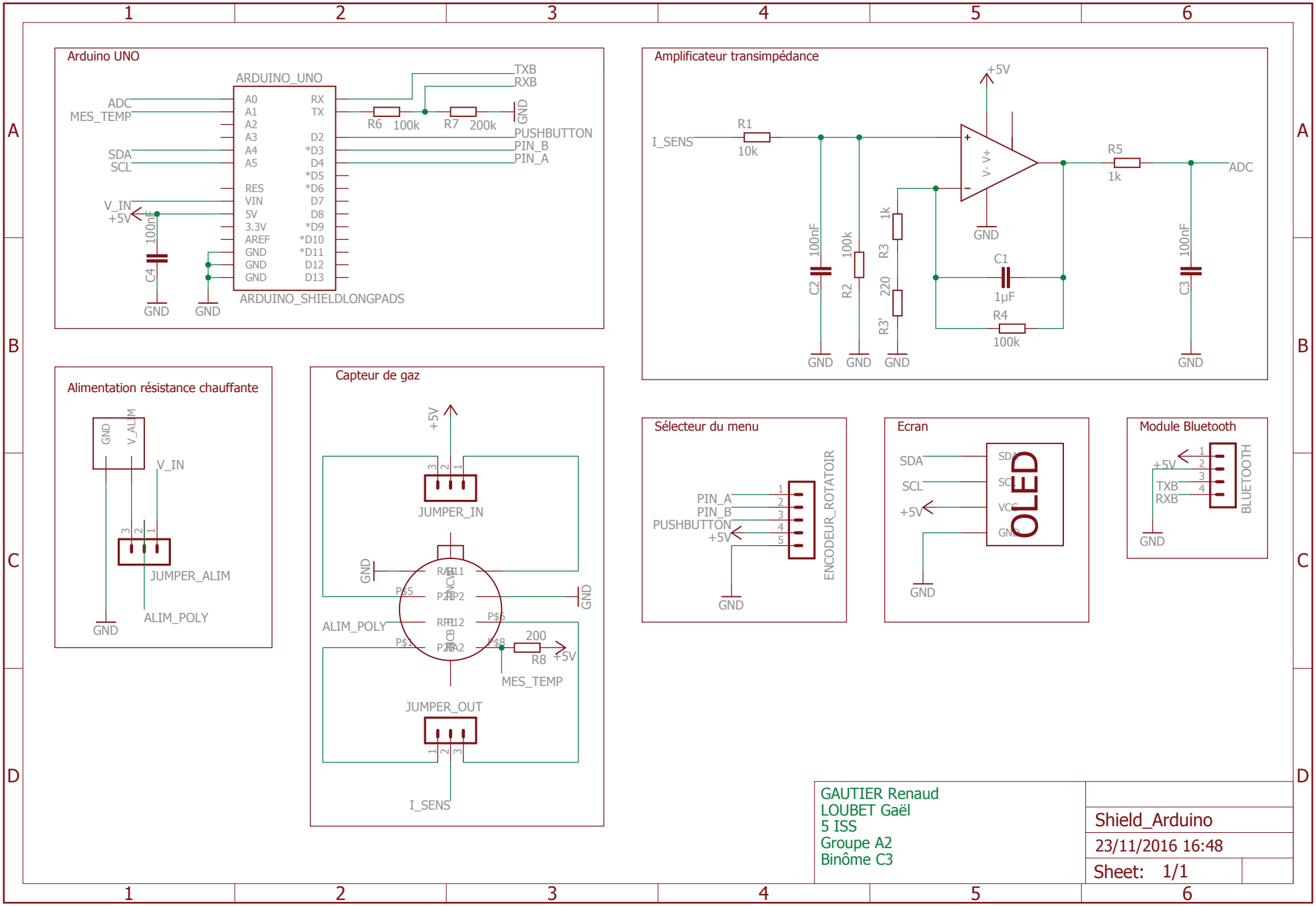
Arduino UNO
ARDUINO_UNO
ADC
MES_TEMP
SDA
SCL
V_IN
+5V
100nF
C4
GND
GND
A0
A1
A2
A3
A4
A5
RES
VIN
5V
3.3V
AREF
GND
GND
RX
TX
D2
*D3
D4
*D5
*D6
D7
D8
*D9
*D10
*D11
D12
D13
ARDUINO_SHIELDLONGPADS
TXB
RXB
R6 100k
R7 200k
GND
PUSHBUTTON
PIN_B
PIN_A
Amplificateur transimpédance
+5V
I_SENS
R1
10k
100nF
C2
100k
R2
1k
R3
220
R3'
GND
GND
GND
V- V+
GND
C1
1µF
R4
100k
R5
1k
ADC
100nF
C3
GND
Alimentation résistance chauffante
GND
V_ALIM
V_IN
JUMPER_ALIM
ALIM_POLY
GND
Capteur de gaz
+5V
JUMPER_IN
GND
GND
ALIM_POLY
200
R8
+5V
MES_TEMP
JUMPER_OUT
I_SENS
Sélecteur du menu
PIN_A
PIN_B
PUSHBUTTON
+5V
ENCODEUR_ROTATOIR
GND
Ecran
SDA
SCL
+5V
OLED
GND
Module Bluetooth
+5V
TXB
RXB
BLUETOOTH
GND
GAUTIER Renaud
LOUBET Gaël
5 ISS
Groupe A2
Binôme C3
Shield_Arduino
23/11/2016 16:48
Sheet: 1/1

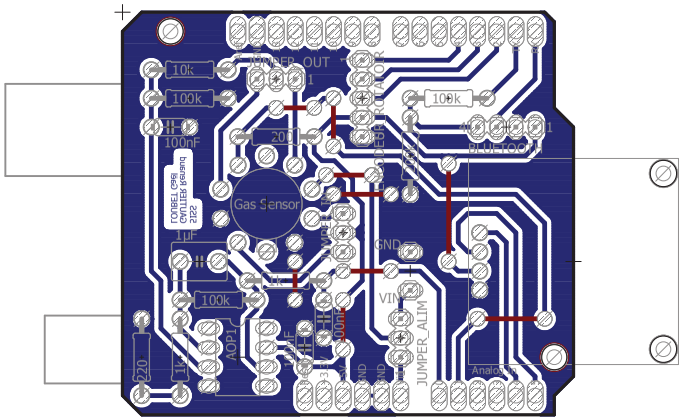
JUMPER_OUT
10k
100k
100nF
2200
Gas Sensor
1µF
100k
AOP1
1k
1k
1µF
1µF
100k
GND
VIN
JUMPER_ALIM
100k
Analog IN
PWM Out
Digital IN
TONBELL CPS
CONSULTING
2122

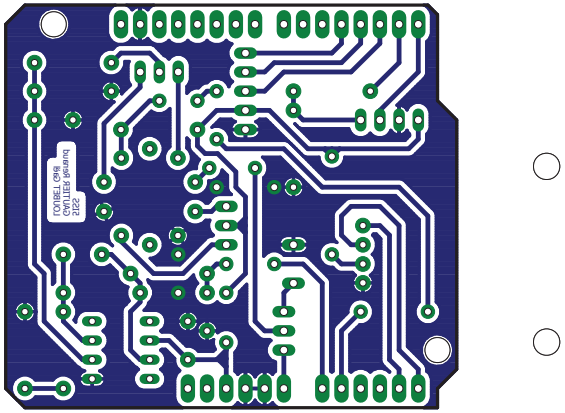

16/01/2017 13:57 U:\eagle\Shield_Arduino\Shield_Arduino.brd

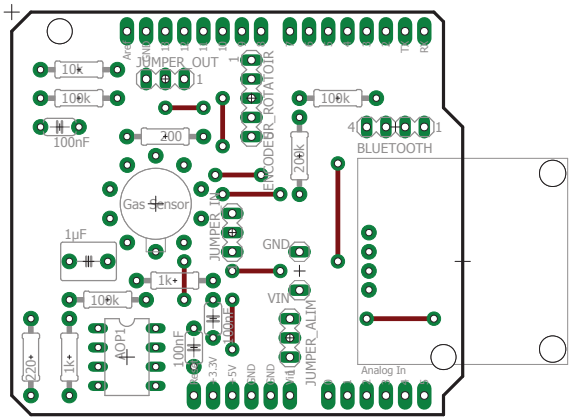
JUMPER_OUT
10k
100k
100nF
200
Gas sensor
1µF
1k
100k
OP1
220
1k
100nF
3.3V
5V
GND
GND
JUMPER_ALIM
VIN
GND
JUMPER_IN
ENCODER_ROTATOIR
100k
20k
BLUETOOTH
Analog In

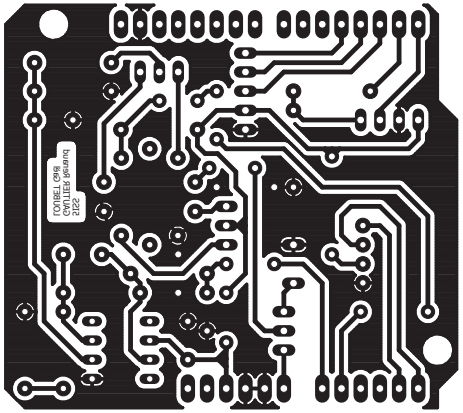

16/01/2017 13:50 U:\eagle\Shield_Arduino\Shield_Arduino.brd