BIOCHEMISTRY CUMULATIVE EXAM
April 14, 2000

Protein Structure and Folding

1(15pts each) Protein Folding: Physical basis for protein denaturation: Choose **four** and summarize how a protein denatures.

a) by extremes of pH

b) by denaturants (guanidium HCl and urea)

c) by heat

d) by GroEL/GroES type chaperons

e) by sodium dodecyl sulfate / beta-mercaptoethanol

(20pts each) Hemagglutinin induces membrane fusion and its structure undergoes major structural changes at pH 6. The schematic diagram below illustrates the large conformational differences between the high and low pH forms of hemagglutinin. Most of the secondary structure elements are essentially preserved but there are two important exceptions. First, the loop region B in the high pH form has changed into an alpha-helix producing a continuous 100 Å long helix composed of regions A, B and C at low pH. Second, an alpha-helical region in the middle of helix C and D has changed into a loop region.

a) Changes in ionic states of which amino acid residue types would most likely contribute to the large conformational change?
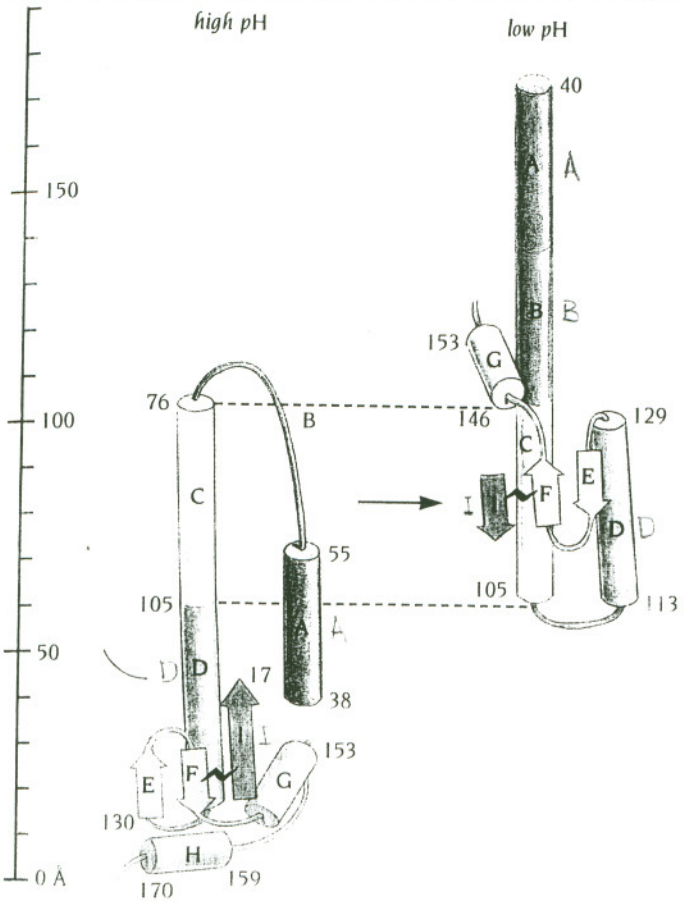
b) The conformational change induced by low pH is irreversible. The low pH form is more thermostable than the high pH form and does not revert to the initial state when pH is raised. What does this tell you about the relative stability of low and high pH hemagglutinins?