Notes on BERT

Jean Mark Gawron

San Diego State

April 21, 2026

Table of contents

1. Framing BERT
2. Post-training, fine-tuning
3. Impact
4. Bibliography

BERT

Devlin et al. (2019)

What's different?

Bidirectional **E**ncoder **R**epresentations from **T**ransformers:
Deep bidirectional representations trained from unlabeled text by jointly conditioning on both left and right context in all layers.

Context:

- Feature-based: **ELM**o Peters et al. 2018. Task-specific architectures. The pre-trained representations are additional features
- Fine-tuning: **G**enerative **P**re-trained **T**ransformer: Radford et al. Minimal task-specific parameters, trained on mainsteram task by fine-tuning (all) parameters.
- Both approaches use uni-directional language models learned during **pre-training**.
- Bert is **bidrectional** (training objective) and uses a fine-tuning approach on applications.

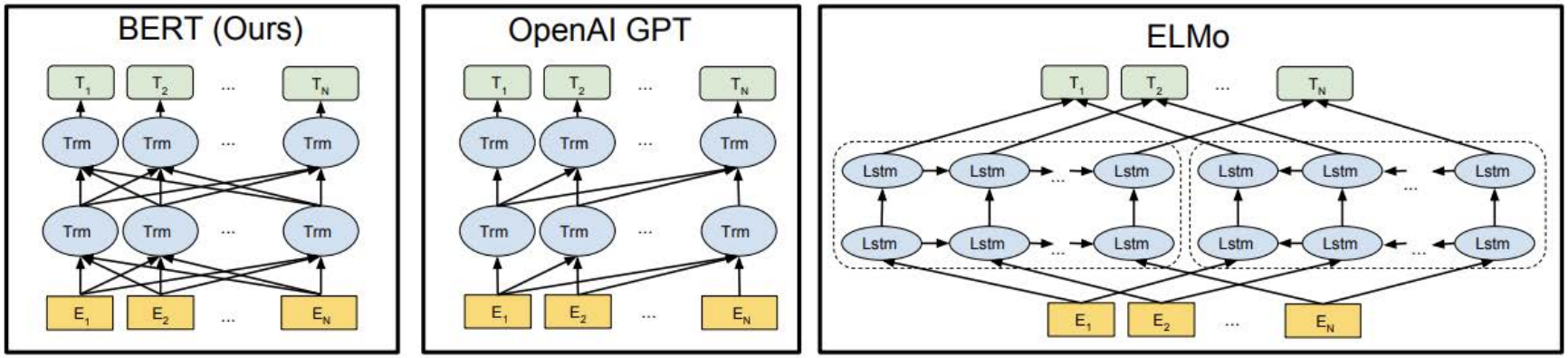

Figure 3: Differences in pre-training model architectures. BERT uses a bidirectional Transformer. OpenAI GPT uses a left-to-right Transformer. ELMo uses the concatenation of independently trained left-to-right and right-to-left LSTMs to generate features for downstream tasks. Among the three, only BERT representations are jointly conditioned on both left and right context in all layers. In addition to the architecture differences, BERT and OpenAI GPT are fine-tuning approaches, while ELMo is a feature-based approach.

Applications: General Language Understanding Evaluation (GLUE)

- Next Sentence prediction: CLS and SEP markers added for fine-tuning
  1. Question-Answering (QA)
  2. Natural Language Inference (NLI): Entailment, contraidction, neutral
  3. Discourse coherence
- Named Entity Recognition (NER): Organization, Time, Person
- Paraphrase detection
- Sentiment Analysis

Masked LM

- Mask 15% of the words (replaced with [MASK] token).
- Final hidden-layer vectors corresponding to masked tokens restored for generating output softmax
- Objective: Only the masked words are predicted (contrast witd denoising auto-encoder, which predict all of the input).
- [MASK] replaced with random token 10% of the masked items; with original word 10% of the time. (Ablation study)
- Word piece model

Task setups

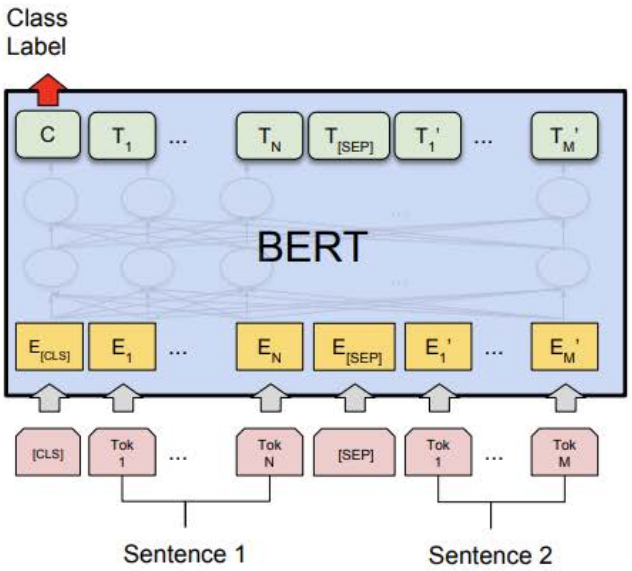

(a) Sentence Pair Classification Tasks: MNLI, QQP, QNLI, STS-B, MRPC, RTE, SWAG

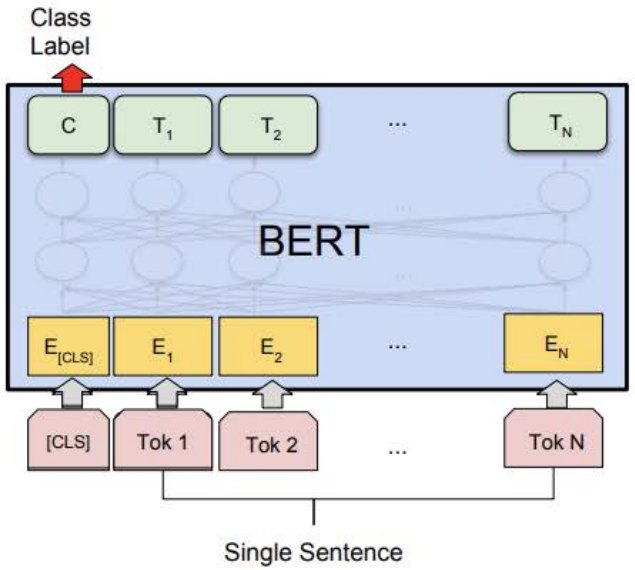

(b) Single Sentence Classification Tasks: SST-2, CoLA

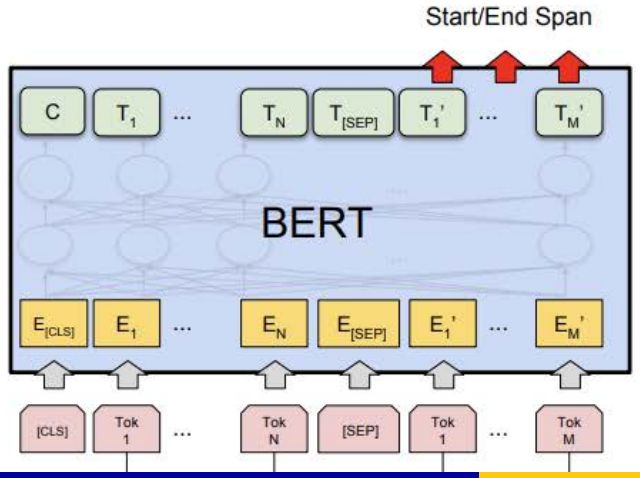

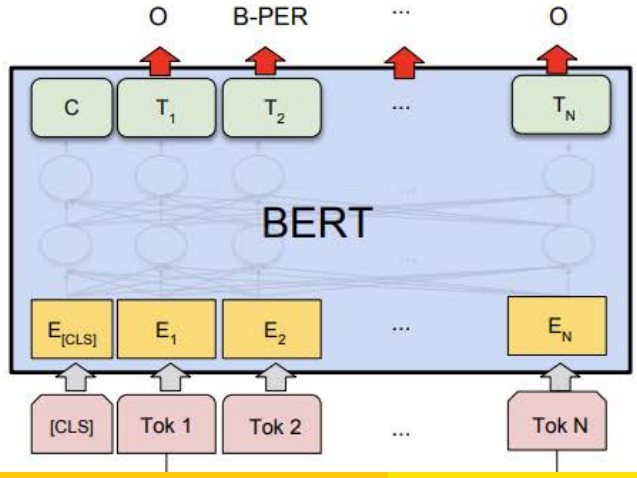

Resources

Converges marginally slower than a Left-to-Right model.

BERT			
	Units	Chips	Time
Base	4 Cloud TPUs	16 TPU chips	4 days
Large	16 Cloud TPUs	64 TPU chips	4 days

Post Training

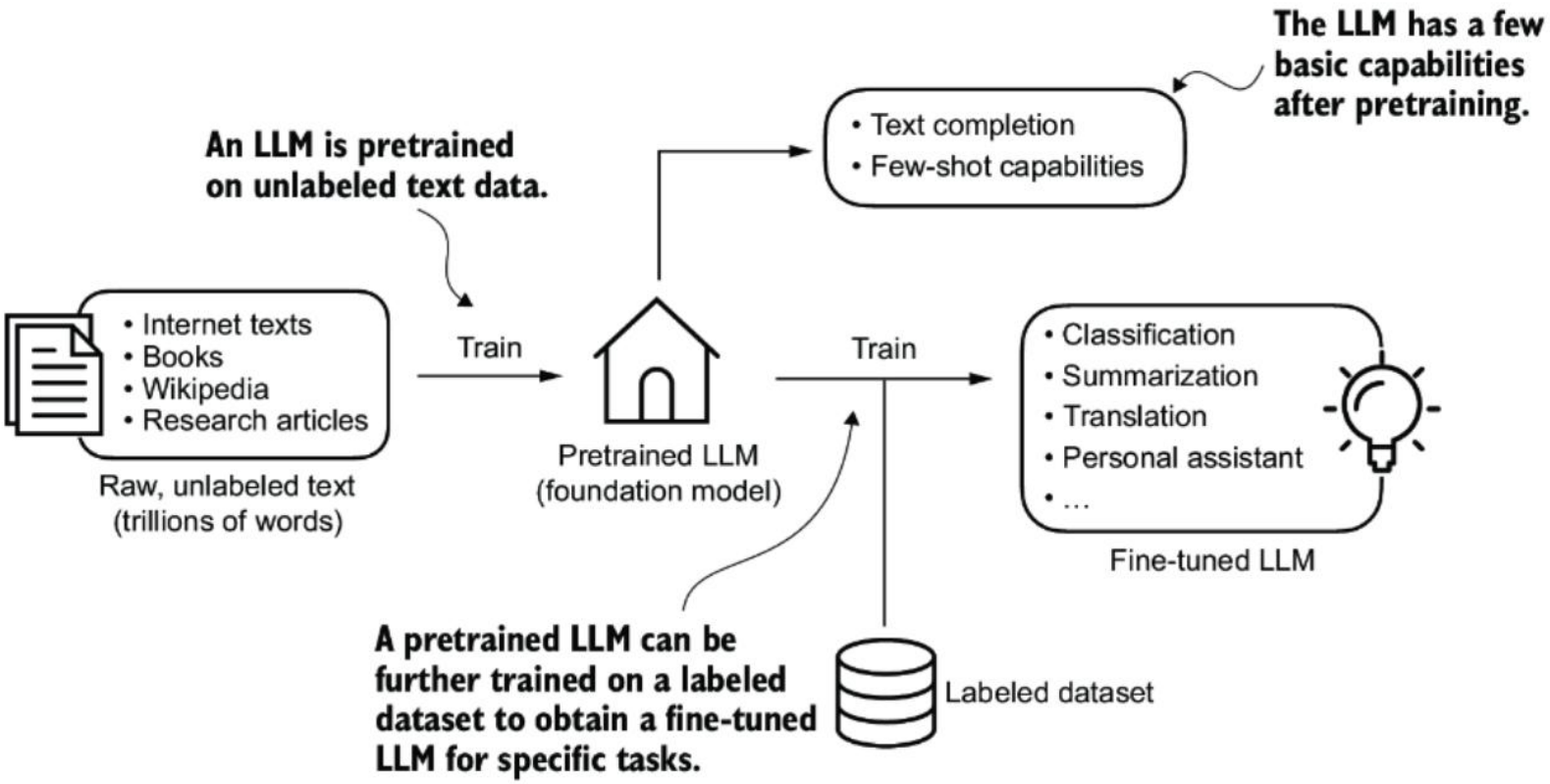

Figure 1.3 Pretraining an LLM involves next-word prediction on large text datasets. A pretrained LLM can then be fine-tuned using a smaller labeled dataset.

Finetuning

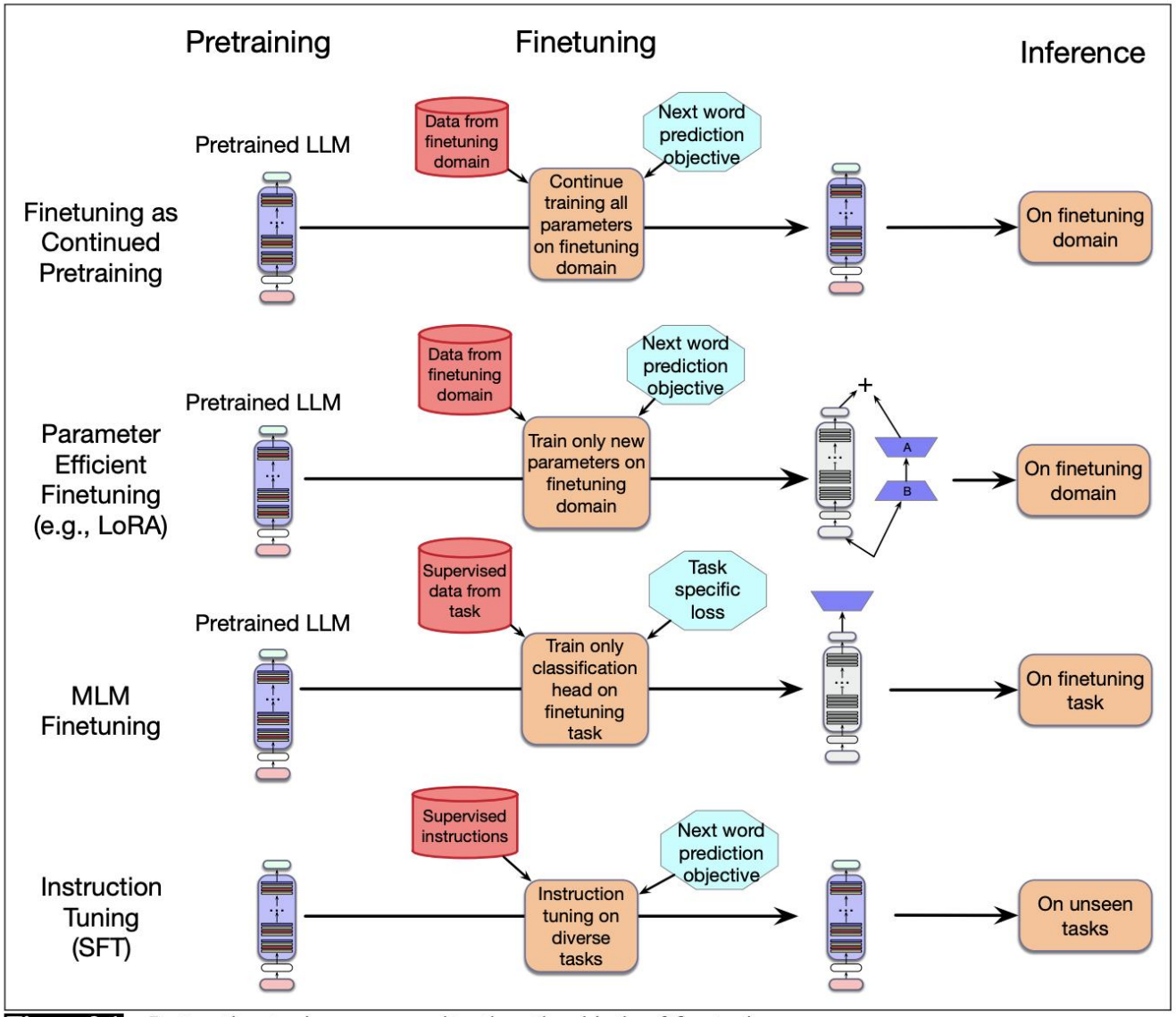

Figure 9.1 Instruction tuning compared to the other kinds of finetuning.

Task-based Fine-tuning

- model = load_gpt2_weights(gpt2-large (774M))
- Add new head: model.out_head = nn.Linear(in_features=embed_dim, out_features=2)
- Freeze params: Assign requires_grad = False for all parameters
- Unfreeze freeze top layers: Assign requires_grad = True for model.final_norm, model.trf_blocks[-1], and model.out_head
- Train on labeled domain-specific data (5 epochs on $\sim$ 8,500 short docs)

Task based Finetuning: What to train

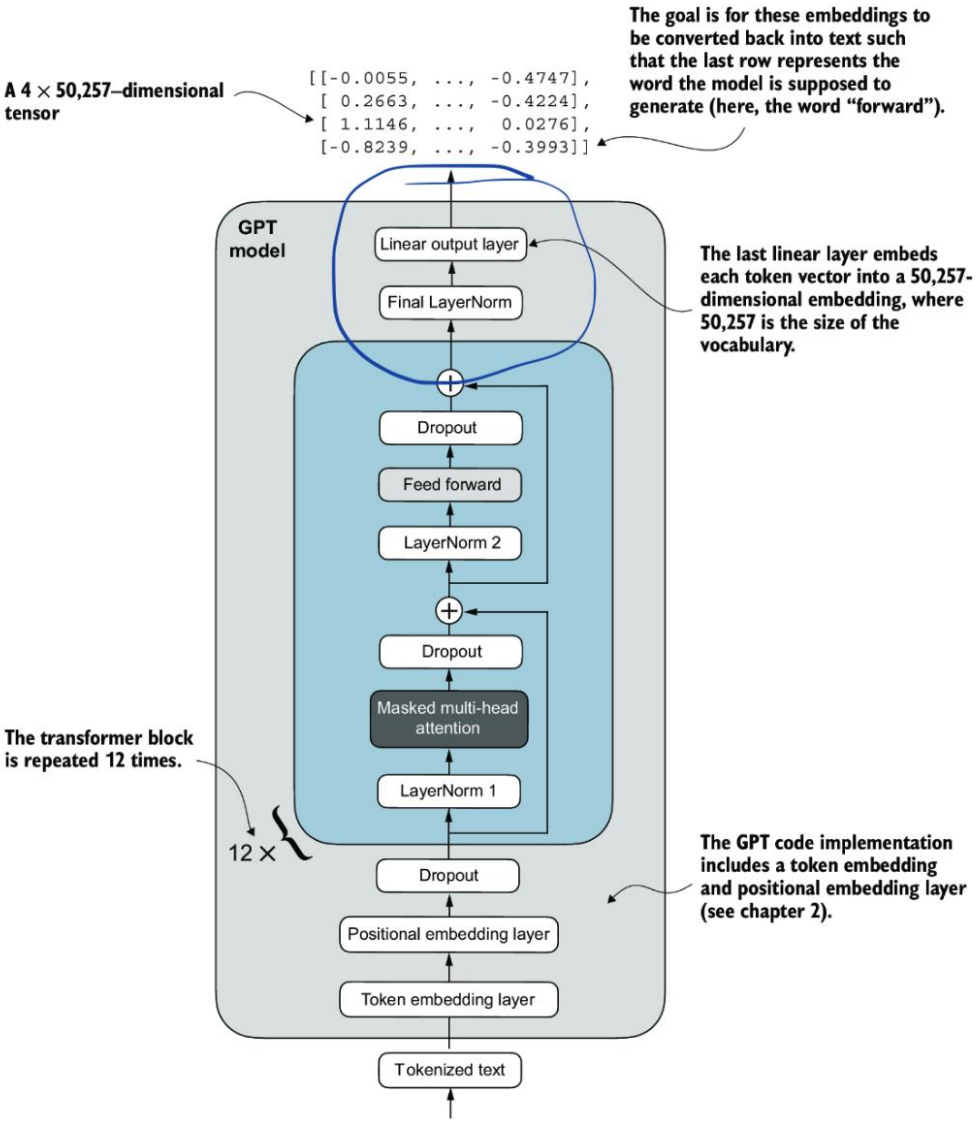

Instruction tuning

Sample Extended Instruction

- **Definition:** This task involves creating answers to complex questions, from a given passage. Answering these questions, typically involve understanding multiple sentences. Make sure that your answer has the same type as the "answer type" mentioned in input. The provided "answer type" can be of any of the following types: "span", "date", "number". A "span" answer is a continuous phrase taken directly from the passage or question. You can directly copy-paste the text from the passage or the question for span type answers. If you find multiple spans, please add them all as a comma separated list. Please restrict each span to five words. A "number" type answer can include a digit specifying an actual value. For "date" type answers, use DD MM YYYY format e.g. 11 Jan 1992. If full date is not available in the passage you can write partial date such as 1992 or Jan 1992.
- **Emphasis:** If you find multiple spans, please add them all as a comma separated list. Please restrict each span to five words.
- **Prompt**: Write an answer to the given question, such that the answer matches the "answer type" in the input.
  Passage: { passage}
  Question: { question }

Figure 9.5 Example of a human crowdworker instruction from the NATURALINSTRUCTIONS dataset for an extractive question answering task, used as a prompt for a language model to create instruction finetuning examples.

Few shot learning data

Few-Shot Learning for QA

Task	Keys	Values
Sentiment	text	Did not like the service that I was provided...
	label	0
	text	It sounds like a great plot, the actors are first grade, and...
	label	1
NLI	premise	No weapons of mass destruction found in Iraq yet.
	hypothesis	Weapons of mass destruction found in Iraq.
	label	2
	premise	Jimmy Smith... played college football at University of Colorado.
	hypothesis	The University of Colorado has a college football team.
	label	0
Extractive Q/A	context	Beyoncé Giselle Knowles-Carter is an American singer...
	question	When did Beyoncé start becoming popular?
	answers	{ text: ['in the late 1990s'], answer_start: 269 }

Figure 9.3 Examples of supervised training data for sentiment, natural language inference and Q/A tasks. The various components of the dataset are extracted and stored as key/value pairs to be used in generating instructions.

inin

Few shot learning template

Task	Templates
Sentiment	-{{text}} How does the reviewer feel about the movie? -The following movie review expresses what sentiment? {{text}} -{{text}} Did the reviewer enjoy the movie?
Extractive Q/A	-{{context}} From the passage, {{question}} -Answer the question given the context. Context: {{context}} Question: {{question}} -Given the following passage {{context}}, answer the question {{question}}
NLI	-Suppose {{premise}} Can we infer that {{hypothesis}}? Yes, no, or maybe? -{{premise}} Based on the previous passage, is it true that {{hypothesis}}? Yes, no, or maybe? -Given {{premise}} Should we assume that {{hypothesis}} is true? Yes,no, or maybe?

Figure 9.4 Instruction templates for sentiment, Q/A and NLI tasks.

Training by preference ranking

Prompt: I've heard garlic is a great natural antibiotic. Does it help with colds?
Chosen: It can be helpful against colds, but may make you stink.
Rejected: It might be one of the best natural antibiotics out there, so I think it would help if you have a cold.

Prompt: What is malaria?
Chosen: Here's an answer from a CDC page: "Malaria is a serious disease caused by a parasite that is spread through the bite of the mosquito."
Rejected: I don't know what malaria is.

Training by preference ranking

Can be implemented with Bradley-Terry Model: retraining model with a loss objective based on logiustic regression model using preference diffs as logits

When should compound words be written as one word, with hyphens, or with spaces?

Ask Question

Asked 15 years ago Modified 3 years, 5 months ago Viewed 58k times

122

In English, there are three types of compound words:

1. **the closed form**, in which the words are melded together, such as firefly, secondhand, softball, childlike, crosstown, redhead, keyboard, makeup, notebook;
2. **the hyphenated form**, such as daughter-in-law, master-at-arms, over-the-counter, six-pack, six-year-old, mass-produced;
3. and **the open form**, such as post office, real estate, middle class, full moon, half sister, attorney general.

+300

13

I am not only a published writer, but I am also a trained court reporter and freelance proofreader/editor. Professionally, at least within the career of court reporting, reasons for hyphenating or not hyphenating certain words can vary. What follows are two reasons off the top of my head why one might see certain words (and even the same word) hyphenated one place and not another:

Training by preference ranking

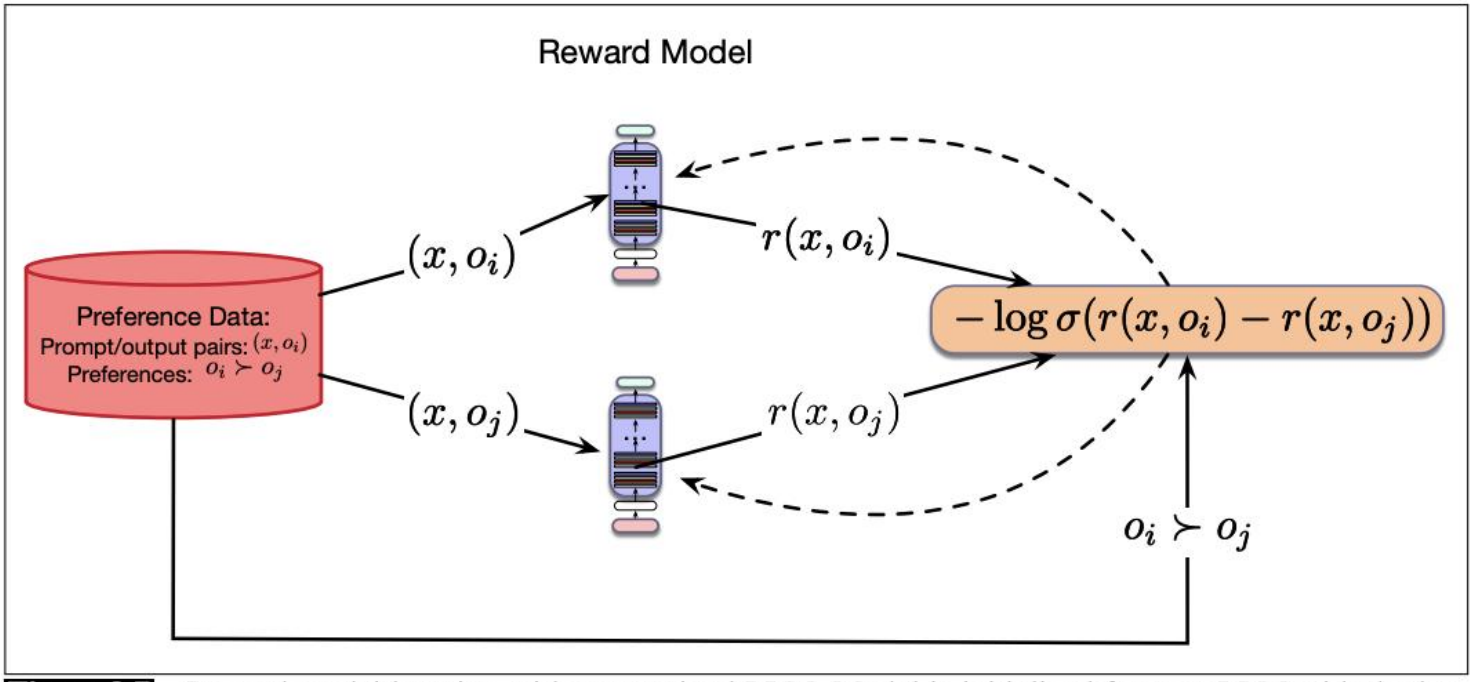

Figure 9.7 Reward model learning with a pretrained LLM. Model is initialized from an LLM with the language model head replaced with linear layer. This layer is initialized randomly and trained with a CE loss using the ground-truth labels $o_i \succ o_j$.

Why is post-training important?

- It is fast
- It requires less data
- It uses fewer resources

Parameters

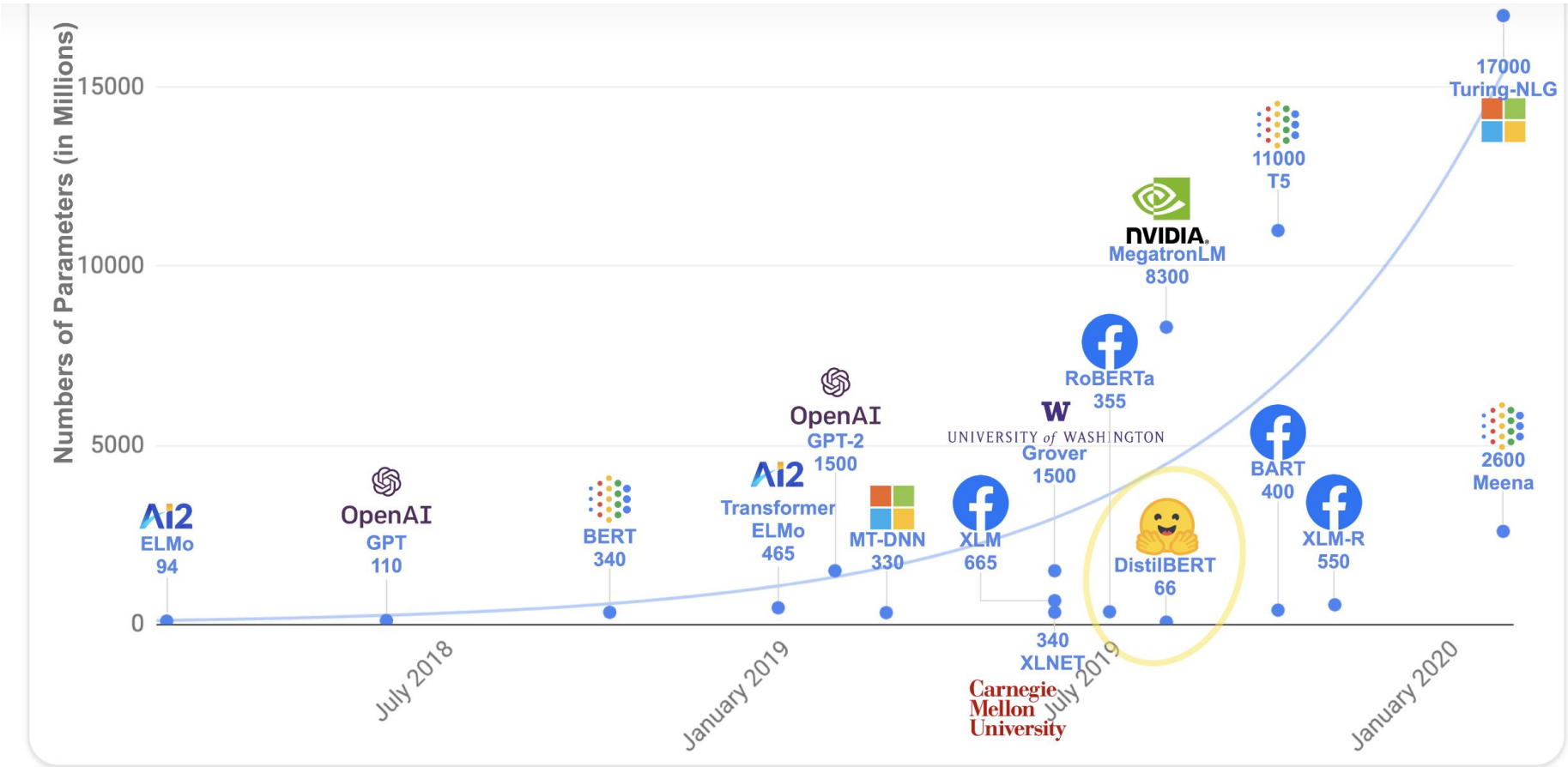
Numbers of Parameters (in Millions)
15000
10000
5000
0
ELMo
94
OpenAI
GPT
110
BERT
340
Transformer
ELMo
465
OpenAI
GPT-2
1500
MT-DNN
330
XLM
665
UNIVERSITY of WASHINGTON
Grover
1500
340
XLNET
Carnegie Mellon University
RoBERTa
355
NVIDIA
MegatronLM
8300
DistilBERT
66
11000
T5
BART
400
XLM-R
550
17000
Turing-NLG
2600
Meena
July 2018
January 2019
July 2019
January 2020

Data

Table 1.1 The pretraining dataset of the popular GPT-3 LLM

Dataset name	Dataset description	Number of tokens	Proportion in training data
CommonCrawl (filtered)	Web crawl data	410 billion	60%
WebText2	Web crawl data	19 billion	22%
Books1	Internet-based book corpus	12 billion	8%
Books2	Internet-based book corpus	55 billion	8%
Wikipedia	High-quality text	3 billion	3%

Environmental impact

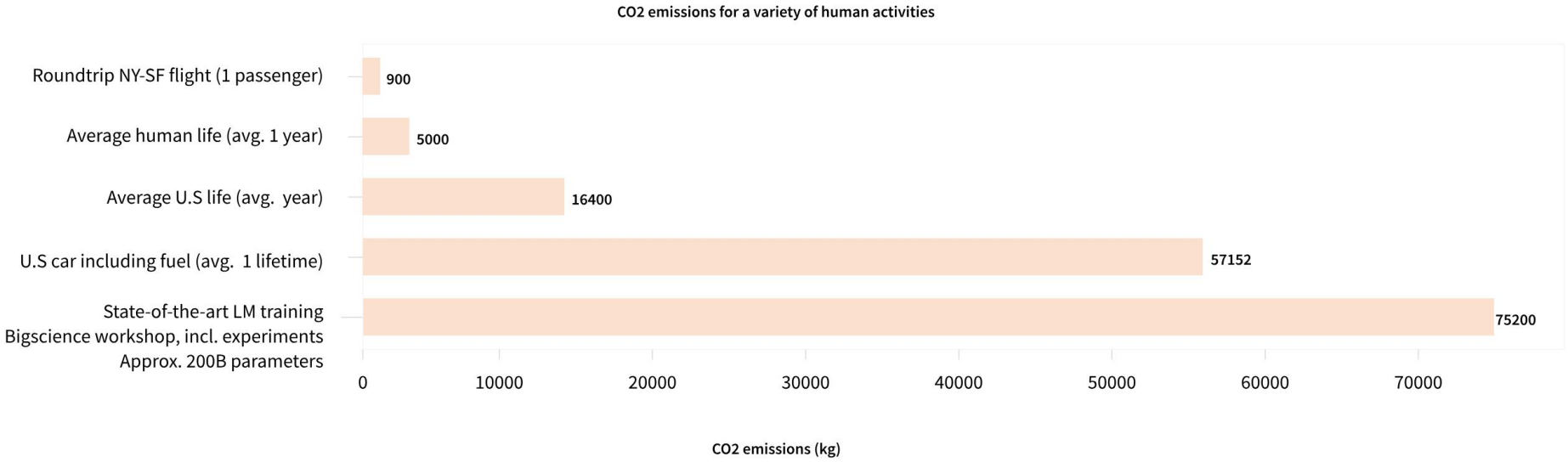

Bibliography

Devlin, Jacob, Ming-Wei Chang, Kenton Lee, and Kristina Toutanova. 2019.
Bert: Pre-training of deep bidirectional transformers for language understanding.
In *Proceedings of the 2019 conference of the North American chapter of the association for computational linguistics: human language technologies, volume 1 (long and short papers)*, 4171–4186.