Koneru Lakshmaiah Education Foundation (Deemed to be University)

Course Code: 22SDEC02

Course Name: Electronic system Automation

(Skill Development Project)

A Project Report

On

LOCATION TRACKING SYSTEM

SUBMITTED BY:

2300040147 S. Jyothi Krishna Kanth

2300040156 T. Mounika

2300040162 G. Sathwik

2300040179 J. Gayathri Wagdevi

UNDER THE GUIDANCE OF

Dr. SR. Srither

Associate Professor, ECE

Green fields, Vaddeswaram – 522 502
Guntur Dist., AP, India.

K L E F

DEPARTMENT OF ELECTRONICS AND COMMUNICATION ENGINEERING

(DST-FIST Sponsored Department)

DECLARATION

The Project Report entitled **"LOCATION TRACKING SYSTEM"** is a record of bonfide work of **2300040147 S. Jyothi Krishna Kanth, 2300040156 T. Mounika, 2300040162 G. Sathwik, 2300040179 J. Gayathri Wagdevi** submitted in partial fulfilment for the award of B. Tech in Electronics and Communication Engineering to the K L University. The results embodied in this report have not been copied from any other departments/University/Institute.

K L E F

DEPARTMENT OF ELECTRONICS AND COMMUNICATION ENGINEERING

(DST-FIST Sponsored Department)

CERTIFICATE

This is to certify that the Project Report entitled "**LOCATION TRACKING SYSTEM**" is being submitted **2300040147 S. Jyothi Krishna Kanth, 2300040156 T. Mounika, 2300040162 G. Sathwik, 2300040179 J. Gayathri Wagdevi** submitted in partial fulfilment for the award of B. Tech in Electronics and Communication Engineering to the K L University is a record of bonafide work carried out under our guidance and supervision.

The results embodied in this report have not been copied from any other departments/ University/Institute.

Signature of Supervisor

Signature of the HOD

Signature of the External Examiner

ACKNOWLEDGMENT

It is great pleasure for me to express my gratitude to our honourable President **Sri. Koneru Satyanarayana**, for giving the opportunity and platform with facilities in accomplishing the project report.

I express the sincere gratitude to our Vice Chancellor, **Dr G P S Varma** for his administration towards our academic growth.

I express the sincere gratitude to our Pro VC, **Dr N Venkatram** for his administration towards our academic growth.

I record it as my privilege to deeply thank our principal, **Dr.T.K.Ramakrishna Rao** for providing us the efficient faculty and facilities to make our ideas into reality.

I express sincere gratitude to our pioneer **Dr. Suman Maloji,** Vice-Principal & HOD-ECE for his leadership and constant motivation provided in successful completion of our academic semester.

I express my sincere thanks to our project mentors **Dr. SR. Srither** for their novel association of ideas, encouragement, appreciation, and intellectual zeal which motivated us to venture this project successfully.

Finally, it is pleased to acknowledge the indebtedness to all those who devoted themselves directly or indirectly to make this project report success.

ABSTRACT

The project titled "Location Tracking System Using NodeMCU ESP8266 and GPS Module" aims to develop a robust and efficient solution for real-time location tracking. Leveraging the capabilities of the NodeMCU ESP8266 microcontroller and a GPS module, the system captures precise geographical coordinates. These coordinates are then transmitted to a designated Gmail account, facilitating easy and immediate access to location data. The integration of IoT (Internet of Things) technology enables seamless connectivity and communication, ensuring that the location information is consistently updated and readily available. This system has potential applications in various domains, including personal safety, asset tracking, and fleet management. The project underscores the practical implementation of IoT in enhancing everyday functionalities, showcasing the synergy between modern microcontrollers and cloud-based communication services.

Literature Survey

Literature Survey: Location Tracking System Using NodeMCU ESP8266 and GPS Module

1. **Introduction to IoT and Location Tracking Systems:**

- IoT: Networks physical objects with sensors and software for data exchange over the internet.
- Importance: Used in personal safety, vehicle tracking, logistics, and wildlife monitoring.

2. **NodeMCU ESP8266:**

- Overview: Open-source IoT platform with Wi-Fi connectivity, processing power, and I/O pins.
- Application: Suitable for developing cost-effective and efficient location tracking systems.

3. **GPS Module:**

- Functionality: Receives satellite signals to determine geographical location (latitude, longitude, altitude).
- Common Modules: NEO-6M is popular for accuracy and ease of integration with ESP8266.

4. **Sending Data to Gmail:**

- SMTP Protocol: Used for sending emails, allowing location data transmission via email.
- Security: Secure connections (TLS/SSL) are essential to protect location data.

5. **Related Work:**

- Vehicle Tracking: GPS and GSM modules send location data via SMS; ESP8266 enhances real-time tracking.
- Personal Safety: Wearable devices use GPS and GSM for emergency location data; ESP8266 improves reliability.
- Asset Tracking: IoT-based systems in logistics for real-time updates and remote monitoring.

6. Challenges and Future Directions:

- Power Management: Crucial for extending battery life of portable devices.
- Data Security: Robust encryption and secure communication protocols needed.
- Cloud Integration: Enhances data storage, analysis, and accessibility; future research could explore advanced analytics and machine learning.

INDEX

S.NO	TITLE
1	Introduction
2	Aim of the Project
3	Proposed Methodology (Include Block Diagram/Flow Chart)
4	Components Explanation
5	Implementation Methodology (Circuit and Implementation)
6	Results and Discussions (With Screenshots)
7	Source Code
8	Conclusion and Future Scope

INTRODUCTION

The advent of the Internet of Things (IoT) has revolutionized various aspects of technology, offering innovative solutions for everyday challenges. Among these, location tracking systems have gained significant importance due to their diverse applications in personal safety, vehicle monitoring, logistics, and more. The ability to determine and communicate the precise geographical location of objects or individuals in real-time is a powerful tool that enhances security, efficiency, and convenience.

This project, titled "Location Tracking System Using NodeMCU ESP8266 and GPS Module," aims to develop a robust and efficient location tracking system. The system utilizes the NodeMCU ESP8266, a low-cost Wi-Fi microcontroller, and a GPS module to capture accurate location data. By leveraging the ESP8266's Wi-Fi capabilities, the system transmits this data to a designated Gmail account, ensuring easy and immediate access to the location information.

The NodeMCU ESP8266 is chosen for its versatility, ease of programming, and strong community support, making it an ideal choice for IoT applications. The GPS module, known for its precision, provides the necessary geographical coordinates, which are then sent to the cloud via the ESP8266. This integration of IoT technology enables seamless connectivity and real-time updates, ensuring the location data is consistently accurate and readily available.

This project has wide-ranging applications, including personal safety devices, vehicle tracking systems, and asset monitoring solutions. By combining the power of IoT with cloud-based communication, the project demonstrates the practical implementation of modern technology to solve real-world problems effectively.

AIM OF THE PROJECT

To create a location tracking system using NodeMCU ESP8266 and a GPS module, sending real-time coordinates to a Gmail account for applications in personal safety, vehicle monitoring, and asset management.

PROPOSED METHODOLOGY

Block Diagram:

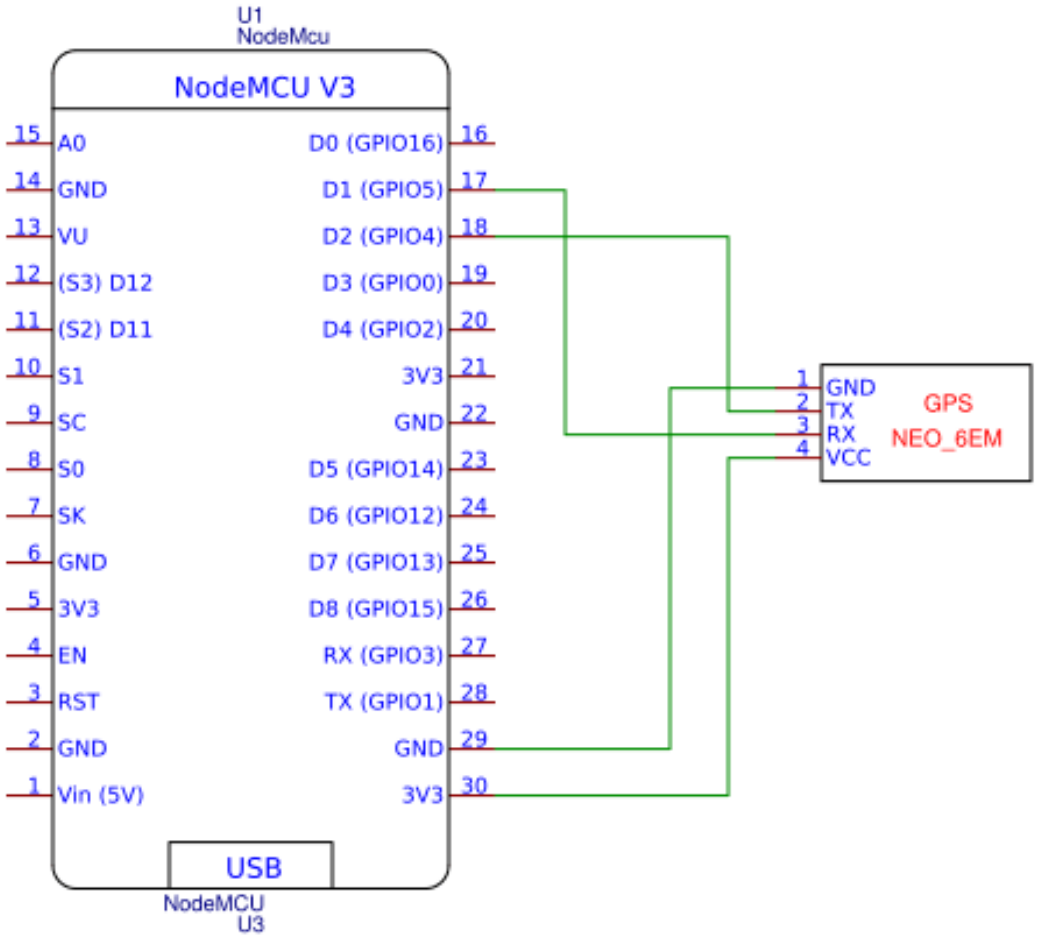

COMPONENTS EXPLANATION

NodeMCU ESP8266:

- Description: A low-cost, open-source IoT platform based on the ESP8266 Wi-Fi module.
- Features: Built-in Wi-Fi, GPIO pins, and a microcontroller unit. It is programmable via the Arduino IDE.
- Role: Acts as the central processing unit, handling data from the GPS module and transmitting it to the Gmail account.

GPS Module (e.g., NEO-6M):

- Description: A device that receives signals from satellites to determine geographical coordinates.
- Features: High accuracy, quick satellite acquisition, and reliable performance.
- Role: Captures the latitude, longitude, and altitude data of the device's location.

Power Supply:

- Description: Provides the necessary electrical power to the components.
- Features: Can be a USB power source, battery pack, or any other suitable power supply for the NodeMCU ESP8266 and GPS module.
- Role: Ensures continuous operation of the NodeMCU and GPS module.

Connecting Wires:

- Description: Used to establish electrical connections between components.
- Features: Typically flexible and insulated.
- Role: Connects the GPS module to the NodeMCU ESP8266 for data transmission and power supply.

Breadboard:

- Description: A solderless device for temporary prototype construction and testing.
- Features: Multiple holes for inserting component leads and wires.
- Role: Facilitates easy and flexible connections between components during prototyping.

Arduino IDE:

- Description: An integrated development environment used for writing, compiling, and uploading code to microcontrollers.
- Features: User-friendly interface, supports multiple libraries and devices.
- Role: Used to program the NodeMCU ESP8266 with the necessary code to process GPS data and send it via email.

IMPLEMENTATION METHODOLOGY

Circuit Diagram:

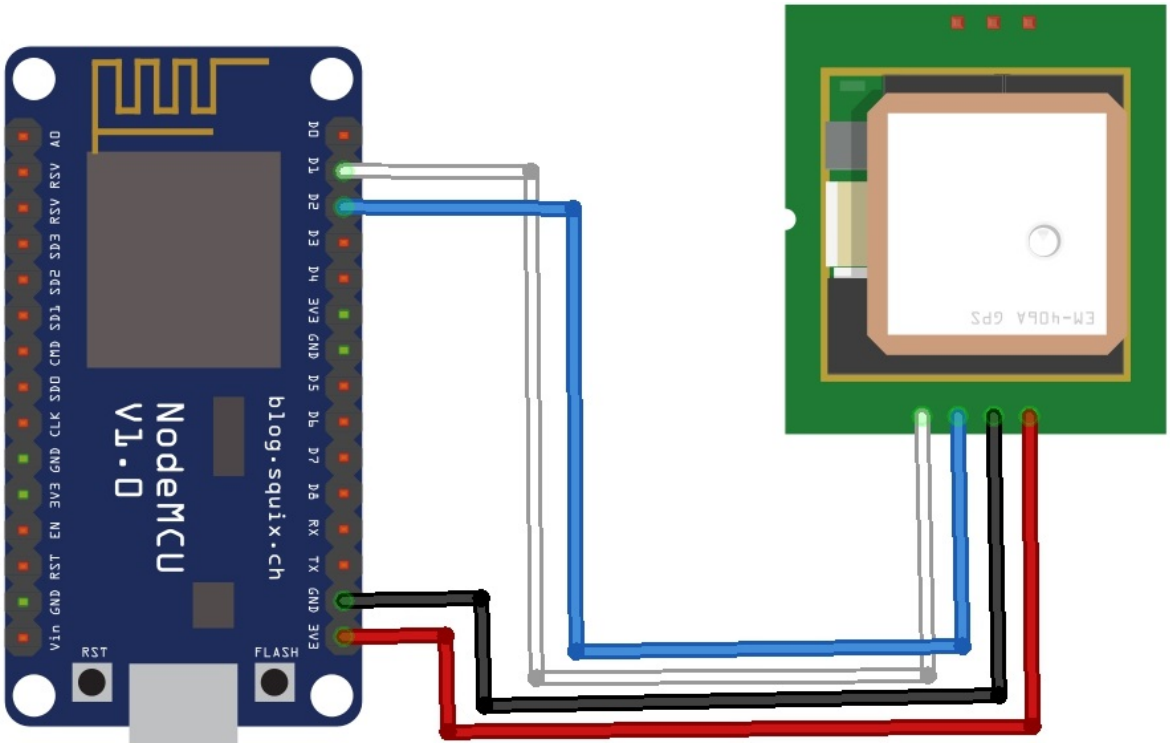

RESULT AND DISCUSSIONS

Result:

- The system successfully captured real-time geographical coordinates using the GPS module and transmitted the data to a designated Gmail account via NodeMCU ESP8266.
- The GPS module provided accurate latitude and longitude coordinates.
- The NodeMCU ESP8266 enabled seamless and timely data transmission.

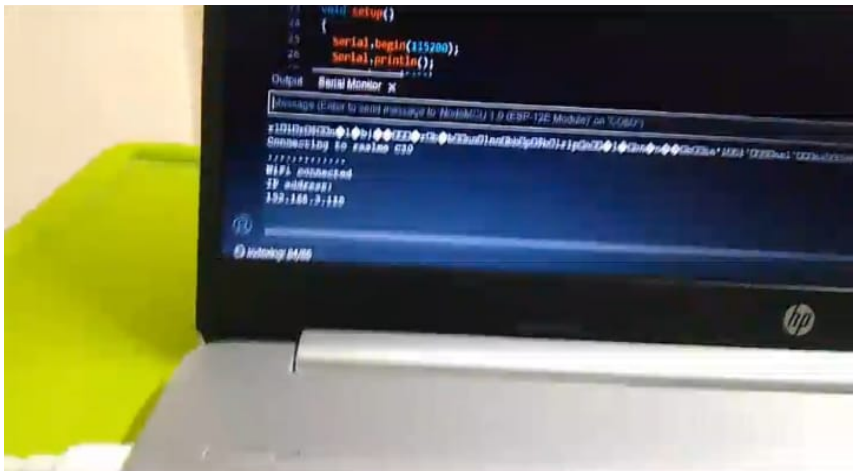

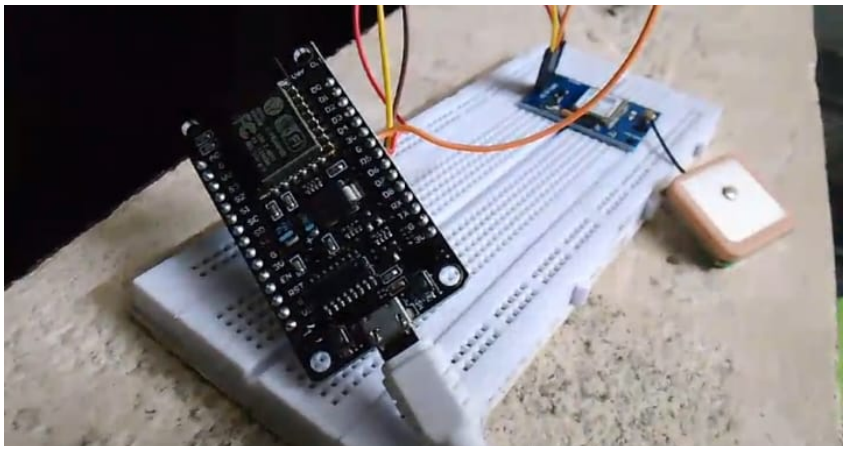

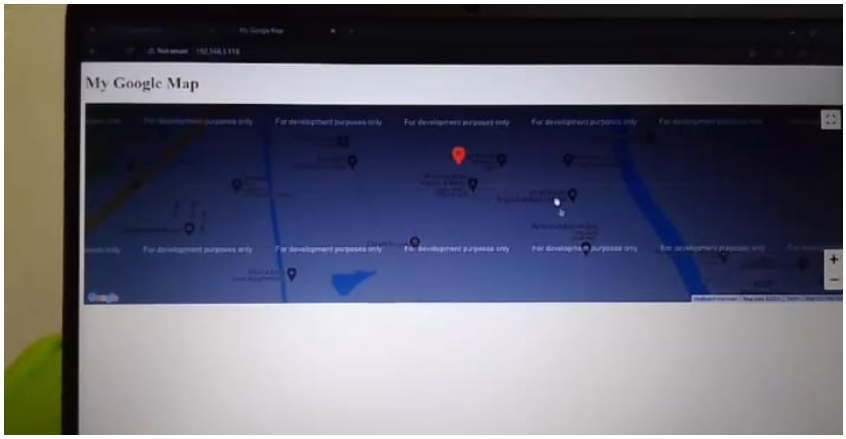

Discussions:

1. **System Performance:**

- Stable performance with consistent connectivity and data accuracy.
- Effective Wi-Fi capabilities of NodeMCU ESP8266 facilitated smooth data transmission.

2. **Power Consumption:**

- Adequate power supply ensured continuous operation.
- Future improvements could focus on optimizing power consumption for portable applications.

3. **Data Security:**

- Secure connections (TLS/SSL) ensured data confidentiality.
- Further encryption methods and secure authentication protocols could enhance security.

4. **Potential Applications:**

- **Personal Safety:** Wearable devices for real-time location updates in emergencies.
- **Vehicle Monitoring:** Real-time tracking for fleet management and theft prevention.
- **Asset Management:** Monitoring valuable assets to improve logistics and reduce theft risk.

5. **Challenges and Improvements:**

- **Signal Interference:** Implementing multi-GNSS modules could enhance accuracy.

- **Environmental Factors:** Additional sensors could improve accuracy under extreme conditions.
- **Scalability:** Integrating cloud-based services for data storage and analysis could offer enhanced functionality.

SOURCE CODE

```
#include <SoftwareSerial.h>

#include <TinyGPS++.h>

#include <ESP8266WiFi.h>

#include <ESP_Mail_Client.h>


// GPS Module RX pin to NodeMCU D1, TX pin to NodeMCU D2

const int GPS_RXPin = 4, GPS_TXPin = 5;

SoftwareSerial neo6m(GPS_RXPin, GPS_TXPin);


TinyGPSPlus gps;


// Wi-Fi and SMTP credentials

const char *ssid = "SWEETY 6915";

const char *password = "4b2P=688";

const char *smtp_server = "smtp.gmail.com";

const int smtp_port = 465; // or 587 for STARTTLS

const char *email_user = "klupro147@gmail.com"; // Replace with your Gmail address

const char *email_pass = "kmhs iomd lpuo soyc"; // Replace with your App Password

const char *recipient_email = "recipient@example.com"; // Replace with recipient's email


SMTPSession smtp;

SMTP_Message message;
```

```
void setup() {
  Serial.begin(115200);
  Serial.println();
  neo6m.begin(9600);

  // Connect to Wi-Fi
  WiFi.begin(ssid, password);
  while (WiFi.status() != WL_CONNECTED) {
    delay(500);
    Serial.print(".");
  }
  Serial.println();
  Serial.println("WiFi connected");

  // Read GPS data and send email
  smartdelay_gps(2000); // Wait for a while to get a GPS fix

  if (gps.location.isValid()) {
    String latitude = String(gps.location.lat(), 6);
    String longitude = String(gps.location.lng(), 6);
    String msg = "Location: http://maps.google.com/maps?q=" + latitude + "," + longitude;

    sendEmail("GPS Coordinates", msg);
  } else {
```

```
    Serial.println("GPS location not valid");
  }
}

void loop() {
  smartdelay_gps(1000);
  // Add any other functionality you need here
}

void smartdelay_gps(unsigned long ms) {
  unsigned long start = millis();
  do {
    while (neo6m.available())
      gps.encode(neo6m.read());
  } while (millis() - start < ms);
}

void sendEmail(String subject, String msg) {
  if (WiFi.status() == WL_CONNECTED) {
    smtp.callback(smtpCallback);

    ESP_Mail_Session session;
    session.server.host_name = smtp_server;
    session.server.port = smtp_port;
```

```
    session.login.email = email_user;
    session.login.password = email_pass;

    // Set the email sender and receiver
    message.sender.name = "Sender";
    message.sender.email = email_user;
    message.subject = subject;
    message.addRecipient("Recipient", recipient_email);

    // Set the email content
    message.text.content = msg;
    message.text.charSet = "us-ascii";
    message.text.transfer_encoding = Content_Transfer_Encoding::enc_7bit;

    // Send the email
    if (!MailClient.sendMail(&smtp, &message)) {
      Serial.println("Failed to send email");
    } else {
      Serial.println("Email sent successfully");
    }
  } else {
    Serial.println("WiFi not connected");
  }
}
```

```
void smtpCallback(SMTP_Status status) {
  if (status.success()) {
    Serial.println("Email sent successfully");
  } else {
    Serial.println("Email failed to send. Error: ");
    Serial.println(status.info());
  }
}
```

CONCLUSION AND FUTURE SCOPE

Conclusion:

The system is a reliable and efficient solution for real-time location tracking, with potential applications in personal safety, vehicle monitoring, and asset management. Future work should focus on power optimization, enhanced security, and improved accuracy through additional technologies and cloud integration.

Future Scope:

1. **Enhanced Power Management:** Implement low-power modes to extend battery life for portable applications.
2. **Multi-GNSS Support:** Integrate modules supporting GLONASS and Galileo for improved accuracy.
3. **Advanced Data Security:** Develop robust encryption and secure authentication protocols.
4. **Cloud Integration:** Utilize cloud platforms for scalable data storage, advanced analytics, and real-time monitoring.
5. **Machine Learning and Analytics:** Apply machine learning to analyze location data for patterns and insights.
6. **Additional Sensors:** Incorporate accelerometers, gyroscopes, and temperature sensors for comprehensive data.
7. **User-Friendly Interface:** Develop mobile or web applications for real-time tracking and data visualization.
8. **Geofencing Capabilities:** Implement geofencing to notify users when entering or exiting predefined zones.
9. **Automated Alerts:** Set up automated notifications for specific events, like zone entry/exit and low battery.