Troubleshooting Cisco Catalyst 2960, 3560 and 3750 Series Switches

BRKCRS-3141

Cisco live!
July 10 – July 14, 2011 • Las Vegas, NV

“Technology makes it possible for people
to gain control over everything,

except over technology.“

John Tudor

Agenda –

- Product Overview
- Troubleshooting
  - CPU
  - Memory
  - Local Link Issues
  - Layer 2 Forwarding
  - Layer 3 IP Unicast
  - Quality of Service
  - TCAM Resource
  - Stacking (StackWise and StackWise Plus)
  - Hardware Health check
- Summary

3750-X

3750-E

3750v2

3560-X

3560-E

3560v2

2960-S

Compact

2960

© 2011 Cisco and/or its affiliates. All rights reserved.

Catalyst Fixed Switching

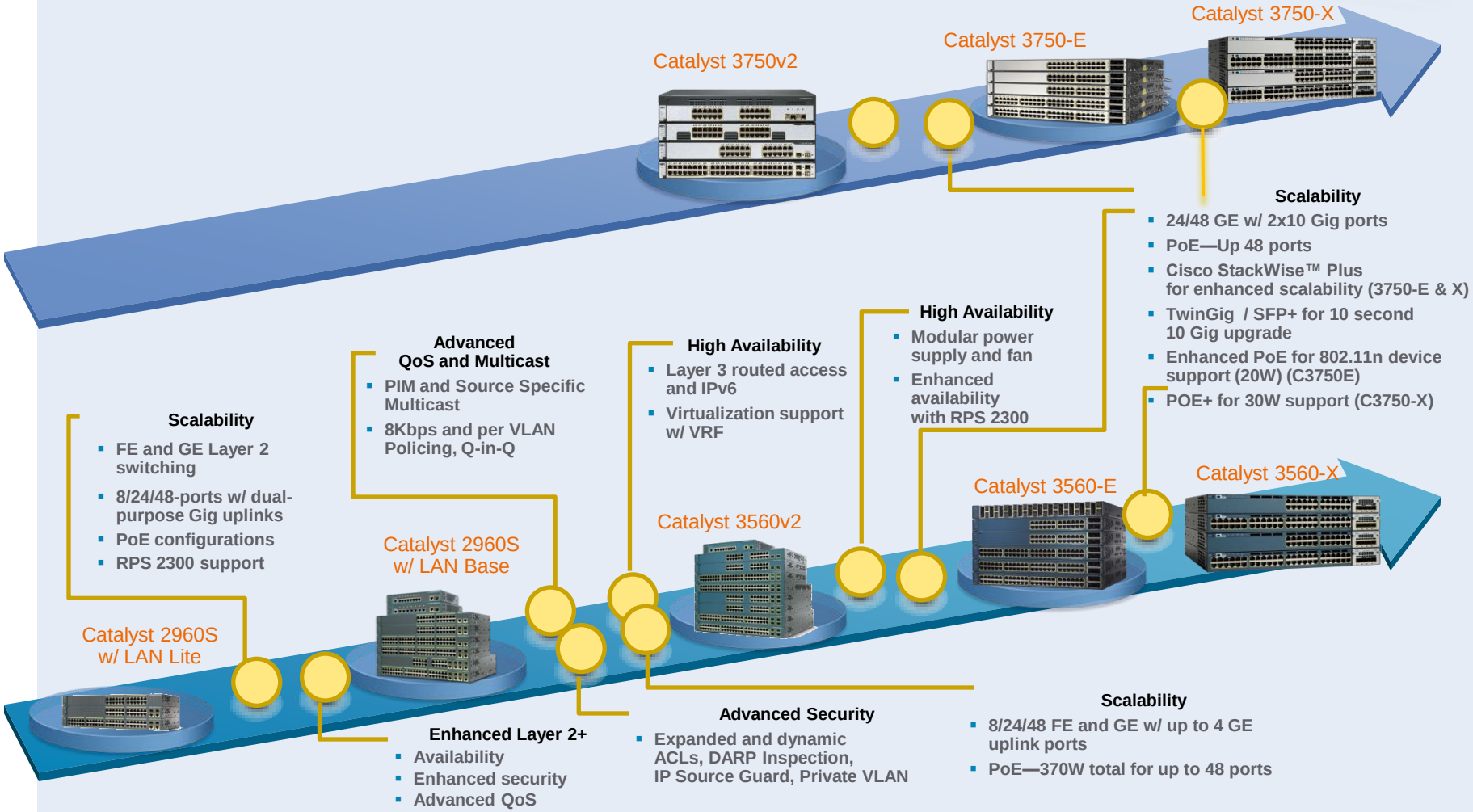

© 2011 Cisco and/or its affiliates. All rights reserved.

Catalyst 3750-E & 3750-X Architecture Overview:

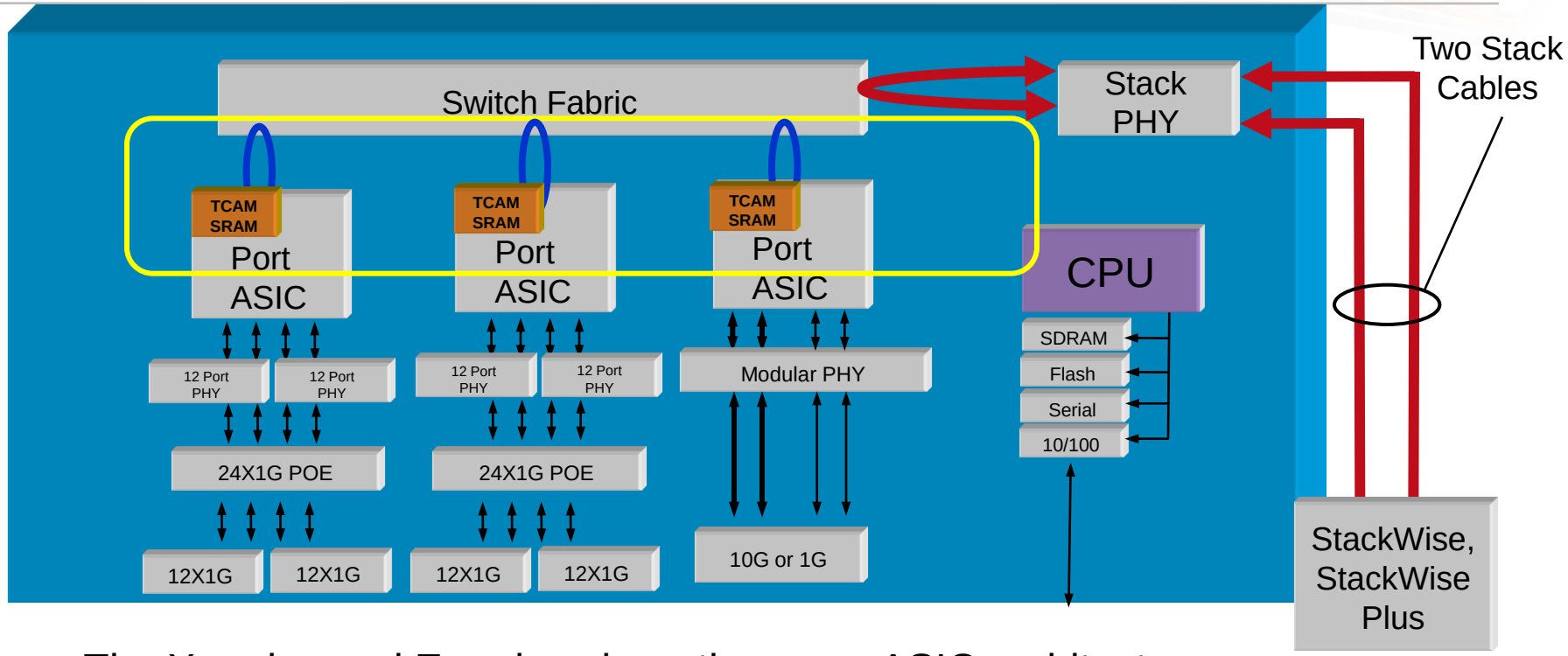

- The X-series and E-series share the same ASIC architecture
- The Switch fabric and Port ASIC is integrated in non-E series.
- Port ASIC to Switch Frabic: dual 13 Gigabit rings
- Switch Fabric speeds exceeds the 104 Gigabit interfaces

© 2011 Cisco and/or its affiliates. All rights reserved.

Catalyst 3750 Hardware Differences
Block Diagram — 48port POE

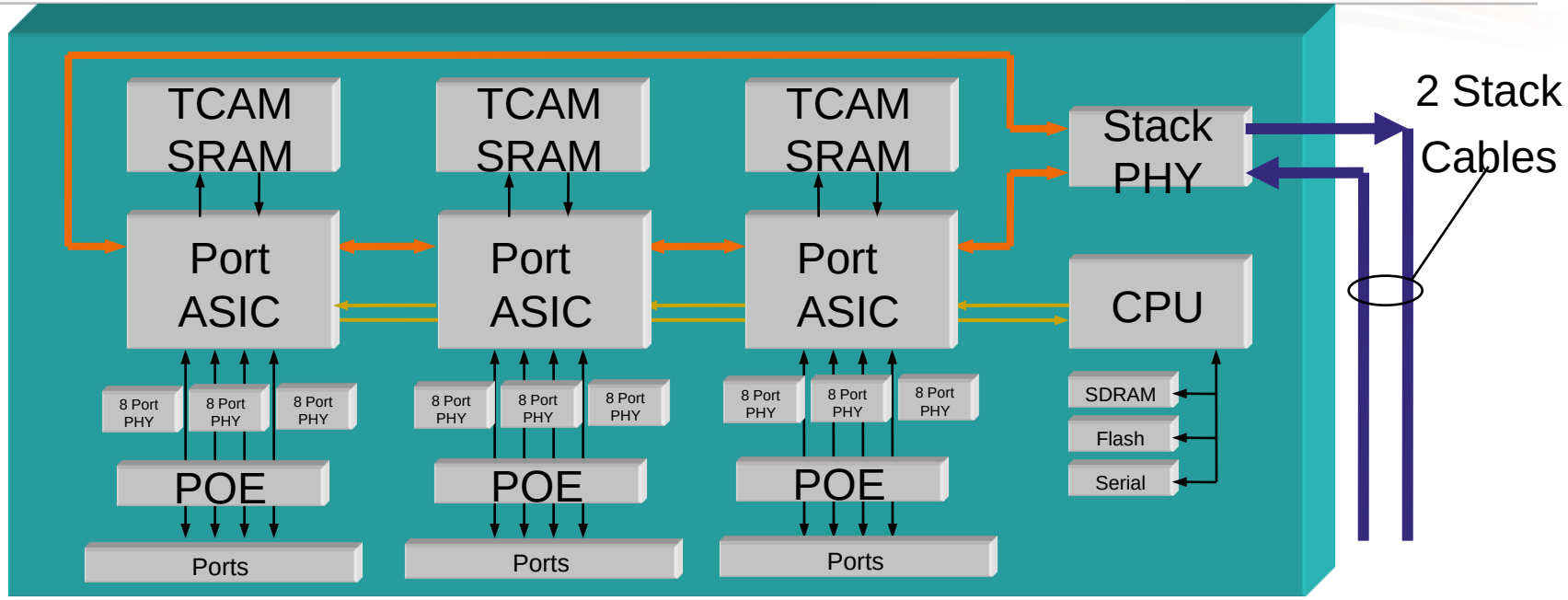

3750 and 3750-E Main Architectural Differences:

- 3750 Does not have a second tier switch fabric like the 3750-E and can not locally switch without sending packets on the ring
- 3750 has external TCAMs
- 3750 only runs in StackWise mode
- The number of interfaces per Port ASIC varies by platform.

© 2011 Cisco and/or its affiliates. All rights reserved. Cisco Public

C3750-X Switch Hardware Components: Areas of Focus

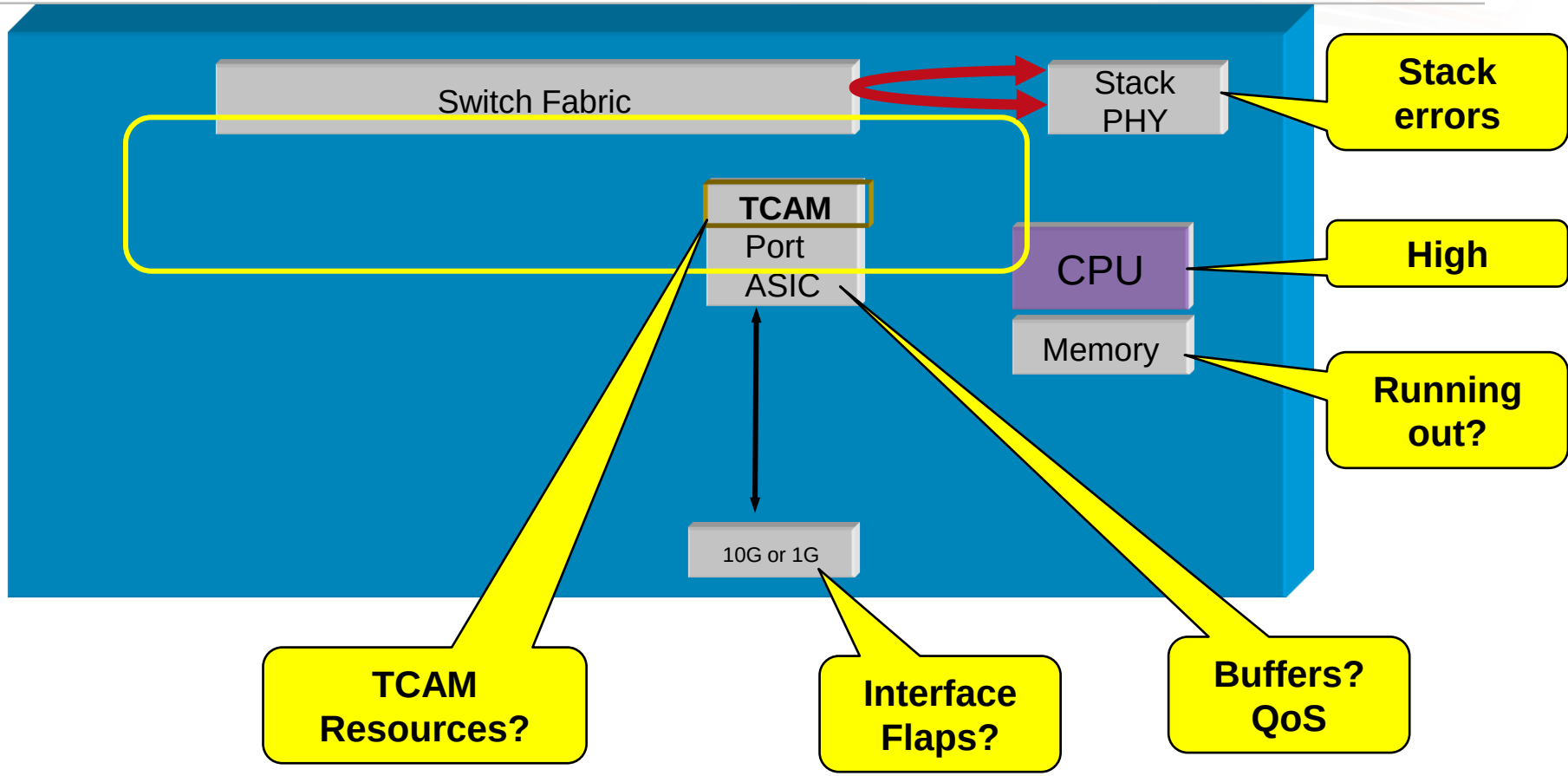

© 2011 Cisco and/or its affiliates. All rights reserved.

Before We Start

- Most outputs taken in this presentation are taken from a Catalyst 3750
- Troubleshooting the 2960, 2960S, 3560, 3560E, 3560X and 3750E, 3750X switches are basically the same
  - Differences called out
- Caution!!!
  - **debug** and **show platform** commands to follow in the slides.
  - Excessive debug output to console may disable switch
  - **show platform** commands are intended for in-depth troubleshooting by Cisco engineers
  - Use **debug** and **show platform** commands as advised by TAC only
- TroubleShooting Basics
  - Check the syslog for warnings and errors
  - Use common sense
  - Some TS techniques impact switch operation.

© 2011 Cisco and/or its affiliates. All rights reserved.

Agenda

- Product Overview
- Troubleshooting
  - CPU
  - Memory
  - Local Link Issues
  - Layer 2 Forwarding
  - Layer 3 IP Unicast
  - Quality of Service
  - TCAM resource
  - Stacking (StackWise and StackWise Plus)
  - General Switch Health
- Summary

3750-X

3750-E

3750

3560-X

3560-E

3560

2960-S

Compact

2960

© 2011 Cisco and/or its affiliates. All rights reserved.

Switch Hardware Components: CPU Functions

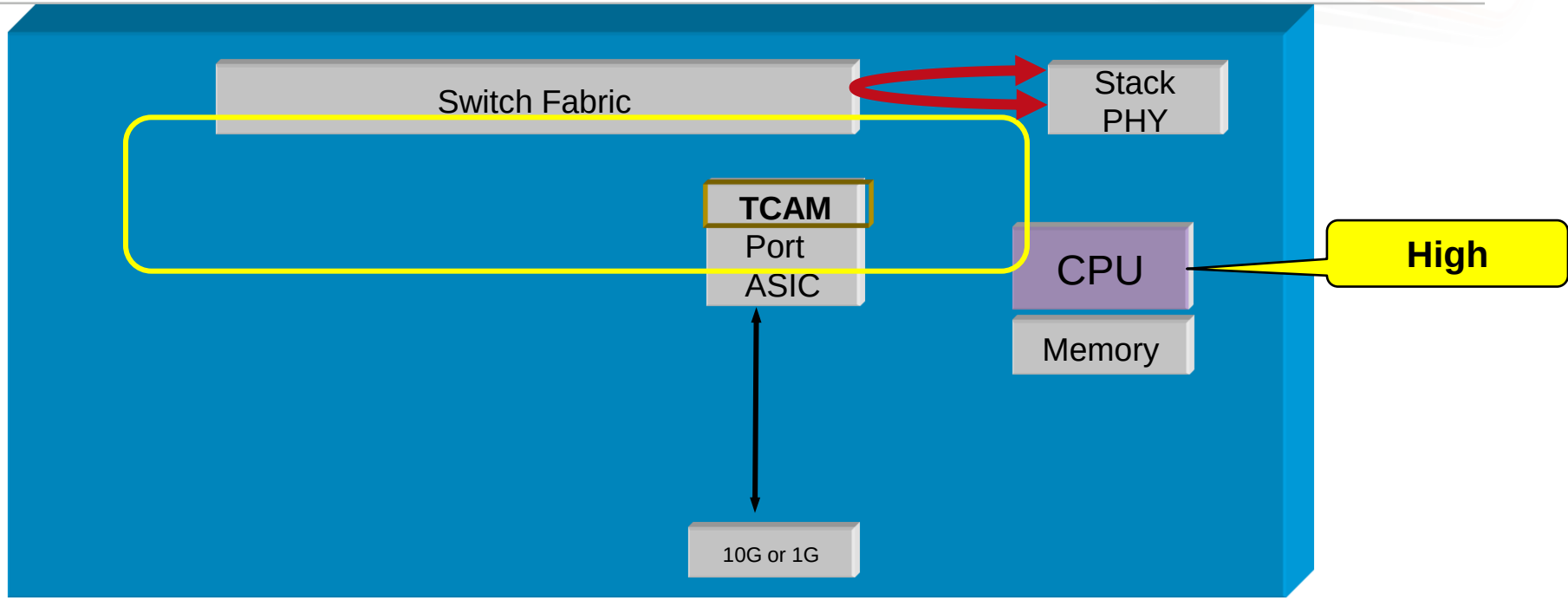

- Runs the IOS
- Processes Control Plane traffic (LACP / PAgP / VTP / STP / CDP / etc)
- Processes packets that are not switched in Hardware

  Packets with IP options, Packets with expired TTL, Glean packets, ARP, Snooping, Software ACLs, SNMP, etc.

© 2011 Cisco and/or its affiliates. All rights reserved.

CPU Utilization TroubleShooting

- High CPU Utilization is problematic because:
  - Delays in forwarding of network traffic
  - Catalyst switch unable to respond to network problems in timely fashion
  - Switch management can become blocked, as CPU does not respond
- Normal CPU Utilization varies by Model
  - Catalyst 2960, 3560, 3560G: ~6% (non-stacked models)
  - Catalyst 3750, 3750G: ~7% (stacked)
  - Catalyst 3750E: ~9% (stacked)
  - Catalyst 3750X: ~22% (stacked)
  - Catalyst 2960S: ~20% (stacked or non-stacked)
  - - feature set (LAN BASE, IP BASE, or IP SERVICES) will impact CPU util as well

© 2011 Cisco and/or its affiliates. All rights reserved.

CPU: Troubleshooting Processes

- CPU Utilization can become high due to 2 reasons:
  - Processes taking up resources
  - Forwarded Network Traffic

  *Note: show tech causes the virtual exec process to use some CPU resources
- Using CPU cycles is not a problem
- 6-8% is minimum - depending upon IOS Feature set (LAN Base, IP Base)
- Normal or Expected CPU Utilization 10-12%

  Depends on number of members in the stack, routing protocols, spanning tree instances, …

```
Switch# show processes cpu sorted
CPU utilization for five seconds: 8%/0%; one minute: 7%; five minutes: 7%
 PID Runtime(ms)   Invoked      uSecs   5Sec   1Min   5Min TTY Process
 137      736218   1947282        378  1.11%  1.05%  1.06%   0 Hulc LED Process
 101      551405     65519       8415  0.79%  0.79%  0.79%   0 hpm counter proc
   4       80310      7870      10204  0.47%  0.12%  0.11%   0 Check heaps
 114         998       806       1238  0.47%  0.03%  0.00%   0 Exec
```

```
Switch# show processes cpu history

Switch(config)# process cpu threshold type {total | process | interrupt} \
  rising percentage interval seconds [falling fall-percentage interval seconds]
```


© 2011 Cisco and/or its affiliates. All rights reserved. Cisco Public

CPU: Example High Utilization

High CPU of 99%,

no indication of the process that had caused it to spike to 99%

```
Sorted output: show proc cpu sorted

CPU utilization for five seconds: 99%/7%; one minute: 98%; five minutes: 87%
PID Runtime(ms)   Invoked      uSecs   5Sec   1Min   5Min TTY Process
196   897835293 538983117       1665  6.05%  6.74% 10.05%   0 IP Input
102    46542612  69782387        666  2.33%  1.79%  1.61%   0 hpm main process
  8     7967710     67451     118127  2.33%  0.29%  0.19%   0 Licensing Auto U
141    48894294 114699852        426  1.24%  1.01%  1.18%   0 Hulc LED Process
 68    45347109   1374466      32992  1.24%  0.85%  0.86%   0 Adjust Regions
```

- Solved by first understanding cause of Interrupts and IP Input process.

© 2011 Cisco and/or its affiliates. All rights reserved. Cisco Public

CPU: Troubleshooting Network Traffic

- CPU has 16 queues
  - Depth of CPU Qs cannot be modified
- Each queue reserves buffering for specific packet type
  - The HW (eg: the port asic) will drop on queue congestion
- Overload on one CPU Queue should not affect other Queues
- A lot of packets in a specific queue may be normal

© 2011 Cisco and/or its affiliates. All rights reserved.

CPU: The 16 Different Queues

```
 0:rpc                 1:stp                 2:ipc
 3:routing protocol    4:L2 protocol         5:remote console
 6:sw forwarding       7:host                8:broadcast
 9:cbt-to-spt          10:igmp snooping      11:icmp
12:logging             13:rpf-fail           14:dstats
15:cpu heartbeat
```

- CPU buffer pools are named **RxQ0 to RxQ15**
- Port ASIC can drop packets before reaching the CPU Q

  Check both locations (pools and asic queues)

```
 Switch# show platform port-asic stats  drop
Supervisor TxQueue Drop Statistics
    Queue  0: 0
    ......
    Queue  7: 10000
```

packets dropped before reaching the CPU

© 2011 Cisco and/or its affiliates. All rights reserved. Cisco Public

CPU: Layer 2 Control Protocol Qs

- STP has its own queue – Queue 1
- Layer 2 protocols queue for the rest – Queue 4

  CDP , PAgP, LACP, DTP, LLDP, UDLD

- Drops on these queues 1 or 4 can cause instability on the network

```
Switch# show controllers cpu-interface
cpu-queue-frames   retrieved   dropped    invalid    hol-block  stray
----------------- ---------- ---------- ---------- ---------- ----------
rpc                132917740  0          0          0          0
stp                31879262   0          23288714   0          0
ipc                10746915   0          0          0          0
routing protocol   267        0          0          0          0
L2 protocol        424610     0          0          0          0
remote console     1121711    0          105531     0          0
sw forwarding      0          0          0          0          0
host               345        0          0          0          0
broadcast          13931      0          55724      0          0
cbt-to-spt         0          0          0          0          0
igmp snooping      0          0          0          0          0
icmp               0          0          0          0          0
logging            0          0          0          0          0
rpf-fail           0          0          0          0          0
dstats             132935598  0          0          0          0
cpu heartbeat      82903147   0          0          0          0
```


© 2011 Cisco and/or its affiliates. All rights reserved. Cisco Public

CPU: Software Forwarding Queue (Q6)

- For Traffic that hardware cannot process
- SW forwarding performance is much lower than HW

To debug any CPU Q

```
Switch# debug platform cpu-queues software-fwd-q

SW-FWD-Q:Consumed by SW-Bridging: Remote Port Blocked L3If:Vlan101
    L2If:GigabitEthernet1/0/2 DI:0x2FD, LT:7, Vlan:101   SrcGPN:2, SrcGID:2,
    ACLLogIdx:0x0, MacDA:000f.f7e8.e042, MacSA: 0000.00bb.87df
    IP_SA:10.101.1.100 IP_DA:10.99.1.100 IP_Proto:255
```

```
Switch# show plat for <src intf> <srcmac> <dstmac> ip <srcip> <dstip> <L4Prot>
```

```
Switch# show plat for Gi1/0/2 00.00bb.87df 000f.f7e8.e042 ip 10.101.1.100
    10.99.1.100 255

Redirected by Input ACL. New destIndex is 0x02C7.

==========================================

Egress: ASIC 0, switch 1

        CPU queues: 6 14.
```


© 2011 Cisco and/or its affiliates. All rights reserved.

CPU: Routing Protocol Queue (Q3)

- Receives all traffic for routing protocols, like BGP, OSPF, EIGRP, HSRP, etc.
- Debug traffic received by CPU.

  In case below “routing-protocol-q” is shown

  Packet ingress intf, Dest MAC, SrcMAC, Dest IP, Src IP are shown

```
Switch# debug platform cpu-queues routing-protocol-q
Switch# debug standby
HSRP debugging is on
*Mar  6 00:47:39.260: RT-Q:Queued: Local Port Fwding L3If:Vlan100
    L2If:GigabitEthernet1/0/1 DI:0x12FC, LT:7, Vlan:100   SrcGPN:1, SrcGID:1,
    ACLLogIdx:0x0, MacDA:0100.5e00.0002, MacSA: 0018.ba88.1fc1
    IP_SA:10.1.1.2 IP_DA:224.0.0.2 IP_Proto:17
*Mar  6 00:47:39.260: HSRP: Vl100 Grp 0 Hello  in  10.1.1.2 Standby pri 100
    vIP 10.1.1.55
```


© 2011 Cisco and/or its affiliates. All rights reserved.

CPU: Host Queue (Q7)

- Used for all unicast traffic sent to the switch.

  TACACS, SSH, telnet, ping, etc.

```
Switch# debug platform cpu-queues host-q

*Mar  6 00:01:46.648: Host-Q:Queued L3If: Local Port Fwding L3If:Vlan100
    L2If:GigabitEthernet1/0/1 DI:0xB0, LT:7, Vlan:100   SrcGPN:489,
    SrcGID:488, ACLLogIdx:0x0, MacDA:000f.f7e8.e041, MacSA:
    0018.ba88.1fc1   IP_SA:10.1.1.2 IP_DA:10.1.1.1 IP_Proto:1


Switch# sh ip cef 10.1.1.1

10.1.1.1/32

  receive for Vlan100
```


© 2011 Cisco and/or its affiliates. All rights reserved.

CPU: Host Queue (Q7) – Drops

- Show buffer shows current buffer usage (RxQ7)
- When free buffers reaches below watermark(32), throttling might occur, resulting in packet drops

```
Switch# debug platform cpu-queues host-q

*Mar  6 00:01:46.648: Host-Q:Queued L3If: Local Port Fwding L3If:Vlan100
    L2If:GigabitEthernet1/0/1 DI:0xB0, LT:7, Vlan:100   SrcGPN:489,
    SrcGID:488, ACLLogIdx:0x0, MacDA:000f.f7e8.e041, MacSA:
    0018.ba88.1fc1   IP_SA:10.1.1.2 IP_DA:10.1.1.1 IP_Proto:1

   TPFFD:DC0001E9_00000064_00B00076-000000B0_A68A0000_00000000

Switch# show buffer | begin RxQ7

RxQ7 buffers, 2040 bytes (total 192, permanent 192):

     64 in free list (0 min, 192 max allowed)

     294 hits, 0 misses
```

Misses equals drops

© 2011 Cisco and/or its affiliates. All rights reserved.

CPU: ICMP Queue (Q11)

- Receives all traffic for which an ICMP message needs to be generated (**excluding PING**)
- Receives a copy of the traffic for which an ICMP packet needs to be generated. Hardware forwarding of the packet still occurs

```
Switch# debug ip icmp

Switch# debug platform cpu-queues icmp-q

*Mar  9 21:34:30.695: ICMP-Q:Queued to Process, use GW:10.1.1.3: Remote
    Port Blocked L3If:Vlan100 L2If:GigabitEthernet4/0/1 DI:0xB4, LT:7,
    Vlan:100   SrcGPN:163, SrcGID:163, ACLLogIdx:0x0,
    MacDA:0018.ba88.1fc1, MacSA: 000f.f7e8.e041   IP_SA:10.1.1.1
    IP_DA:77.1.1.1 IP_Proto:1

*Mar  9 21:34:30.695: ICMP: redirect sent to 10.1.1.1 for dest 77.1.1.1,
    use gw 10.1.1.3
```


© 2011 Cisco and/or its affiliates. All rights reserved.

CPU Utilization: Summary

- CPU utilization sustained below 50% will not cause problems.
- Example of Syslog msg for high CPU

  002182: *Jul 20 04:23:36: %SYS-1-CPURISINGTHRESHOLD: Threshold: Process CPU Utilization(Total/Intr): 9%/0%, Top 3 processes(Pid/Util): 214/3%, 153/0%, 159/0%

- Sorting the output is better than filtering the output with “exclude 0.00%” because that will exclude processes that you want to see.

```
Switch# show process cpu sorted
```

- 2960-S will have a higher CPU utilization than 10%

  Its is normal around 20% utilization

© 2011 Cisco and/or its affiliates. All rights reserved.

Agenda

- Product Overview
- Troubleshooting
  - CPU
  - Memory
  - Local Link Issues
  - Layer 2 Forwarding
  - Layer 3 IP Unicast
  - Quality of Service
  - TCAM resource
  - Stacking (StackWise and StackWise Plus)
  - General Switch Health
- Summary

3750-X

3750-E

3750

3560-X

3560-E

3560

2960-S

Compact

2960

© 2011 Cisco and/or its affiliates. All rights reserved.

Switch Hardware Components: Memory

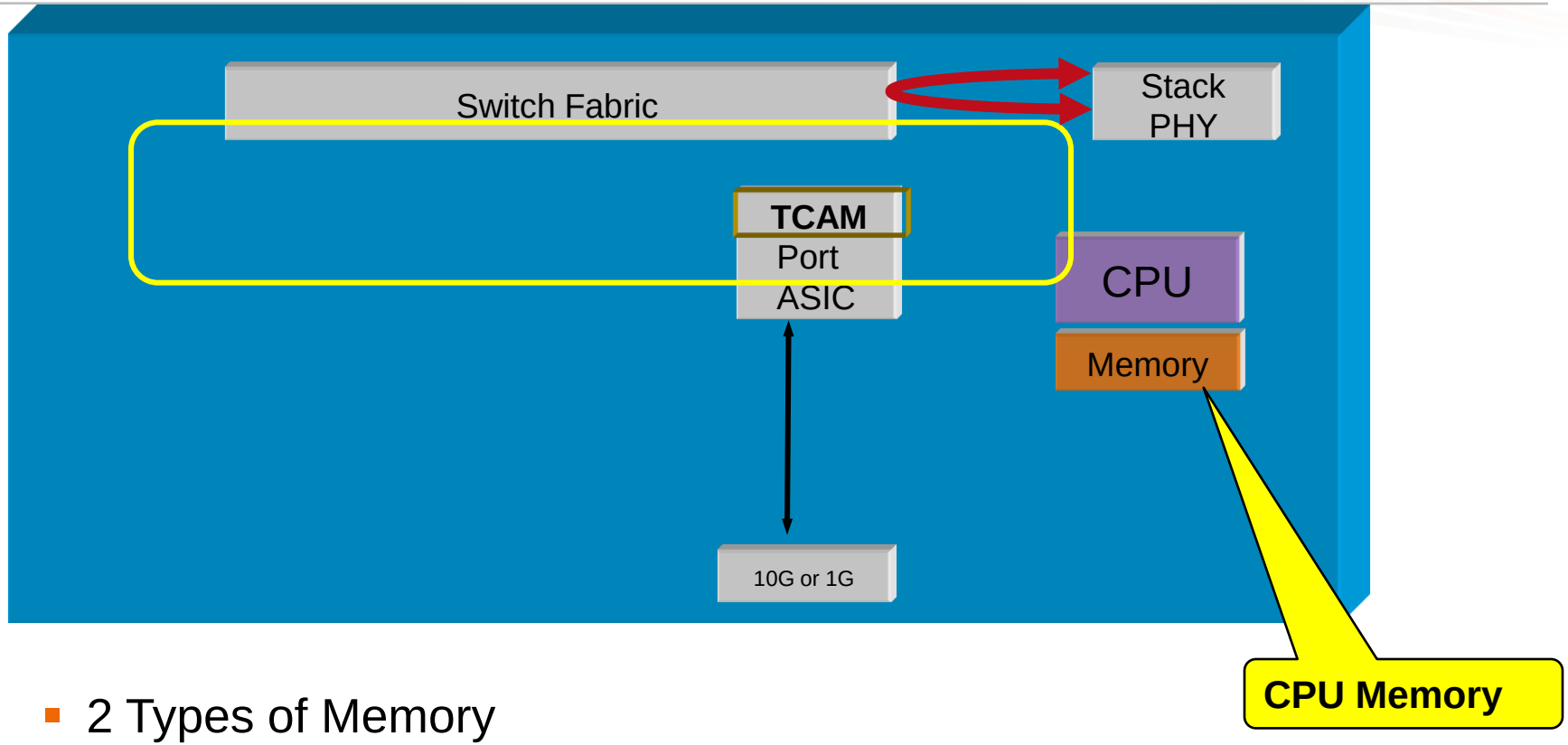

- 2 Types of Memory

  Processor memory is the memory used by IOS

  - I/O memory is used for traffic sent to the CPU

  I/O memory is **not** used for normal packet switching

© 2011 Cisco and/or its affiliates. All rights reserved.

TS: Memory Utilization

- Potential behavior
  - Is Free steady?
  - Is Free steadily decreasing?
- Syslog messages most common indication of memory issue

```
Switch# sh memory statistics

                Head     Total(b)     Used(b)     Free(b)   Lowest(b)  Largest(b)
Processor    2641D6C    81519252    31192204    50327048    49241540    48621848
      I/O    7400000    12574720     8532852     4041868     3821068     4039616
```

Memory available now

The lowest free since boot up

Largest block switch can allocate

© 2011 Cisco and/or its affiliates. All rights reserved.

TS: Memory Utilization

```
Switch# show processes memory sorted
…

 PID TTY  Allocated      Freed    Holding    Getbufs    Retbufs Process
   0   0   74539888   23738156   47199076          0          0 *Init*
   0   0    3399716   17490880    1590292   10657136     553112 *Dead*
  65   0     712620      27424     594488          0          0 Stack Mgr Notifi
 324   0   19794764   19262624     539264          0          0 hulc running con
 304   0     366680        344     370420          0          0 CEF: IPv4 proces
 165   0     294516       2524     294516          0          0 HL2MCM
 164   0     294460       2496     294460          0          0 HL2MCM
  17   0     230568          0     240620      99792          0 EEM ED Syslog
  11   0     228060      14940     226488          0          0 ARP Input
…
```

Is any process steadily increasing held memory?

- Run commands multiple times to benchmark

© 2011 Cisco and/or its affiliates. All rights reserved.

TS: I/O Memory Buffers

- I/O memory for incoming CPU bound packets
- Used by Routers for control and data packets
  - On only control packets
- Shows CPU bound packets
  - Not HW switched packets

```
Switch# show buffers
Buffer elements:
     1679 in free list (500 max allowed)
     27109526 hits, 0 misses, 1641 created

Public buffer pools:
Small buffers, 104 bytes (total 50, permanent 50, peak 181 @ 3w5d):
     49 in free list (20 min, 150 max allowed)
     129877853 hits, 141 misses, 390 trims, 390 created
     0 failures (0 no memory)
Middle buffers, 600 bytes (total 25, permanent 25, peak 94 @ 7w0d):
     25 in free list (10 min, 150 max allowed)
     616791 hits, 54 misses, 162 trims, 162 created
     0 failures (0 no memory)
.
.
.
```


© 2011 Cisco and/or its affiliates. All rights reserved.

Troubleshooting CPU/Memory

Command Summary

Troubleshooting Steps	Commands
Current CPU Utilization	`show processes cpu sorted` `show processes cpu history`

Statistics for Packets Fwd to CPU	`show platform port-asic stats  drop`
	`show platform forward <intf> <srcmac> <destmac> ip <srcip> <destip>`
	`show controllers cpu-interface`

Details of packets received by CPU per ingress queue	`debug platform cpu-queues <queue>` `show buffers`
Memory Issues	`Show memory <>` `Show processes memory <>`

© 2011 Cisco and/or its affiliates. All rights reserved.

Agenda

- Product Overview
- Troubleshooting
  - CPU
  - Memory
  - Local Link Issues
  - Layer 2 Forwarding
  - Layer 3 IP Unicast
  - Quality of Service
  - TCAM resource
  - Stacking (StackWise and StackWise Plus)
  - General Switch Health
- Summary

3750-X

3750-E

3750

3560-X

3560-E

3560

2960-S

2960

Compact

© 2011 Cisco and/or its affiliates. All rights reserved.

Switch Hardware Components: Local Link Issues

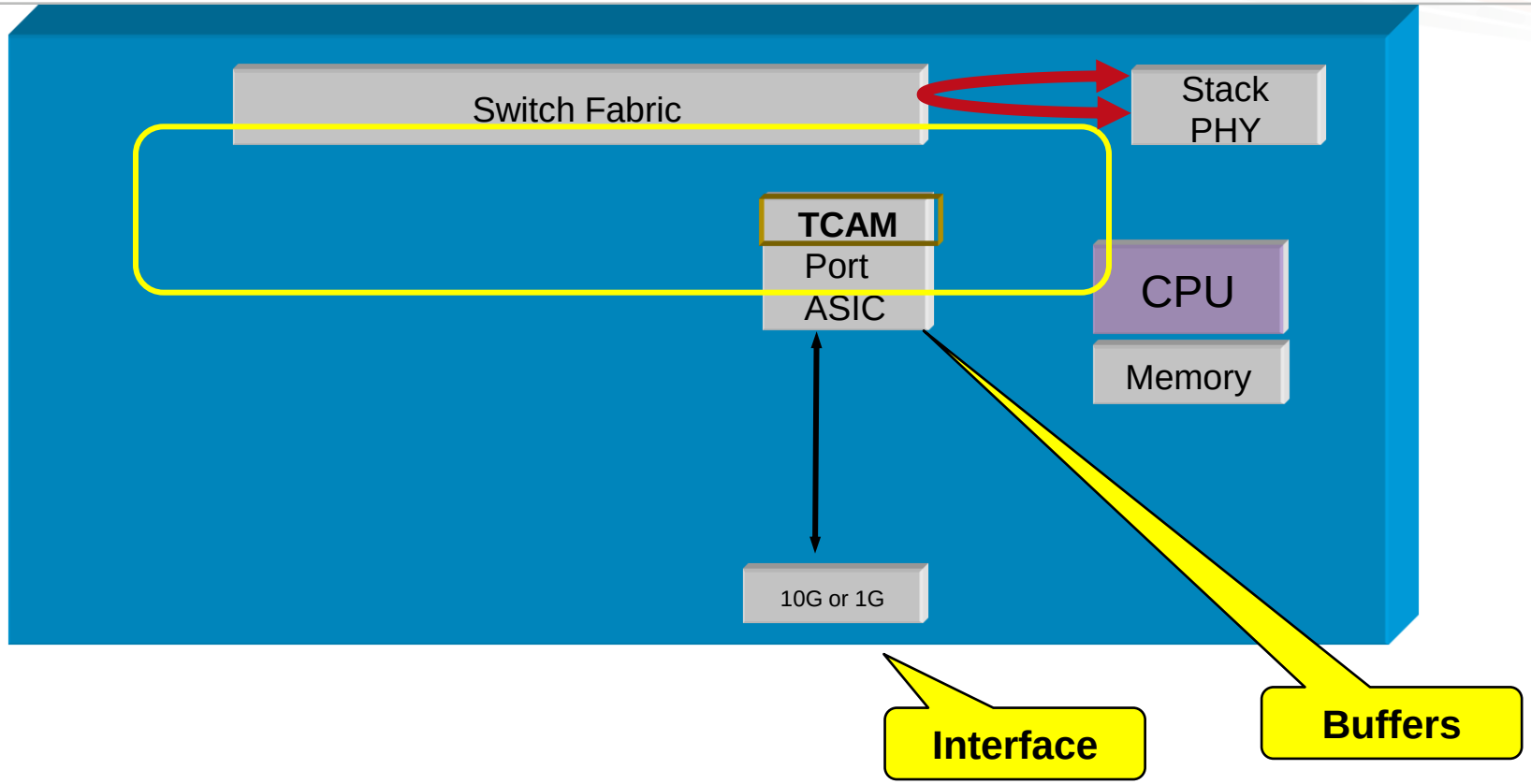

- Link Issue: Failure for the physical interface to remain operational
  - Can be caused by a Layer 1 or Layer 2 problem
- Layer 1: Interface PHY does media conversion (10/100/1000Mbps, 10G)
- Layer 2: The Port ASIC performs: Traffic forwarding, QoS, ACL lookups

© 2011 Cisco and/or its affiliates. All rights reserved.

Troubleshooting Link Issues

- Is the link coming up as expected
- Are packets being sent and received on the port?
- Are there errors on the port
- Is it a “performance” problem

  Are there packet drops on the port

© 2011 Cisco and/or its affiliates. All rights reserved.

Link Issues: Link Not Coming Up

- Verify the configured duplex and speed on both switch and attached host; **fixing speed and duplex should be done on both sides**
- Upgrade the NIC drivers on the host to the latest version available from the vendor
- Try a different cable/NIC and switchport to exclude faulty hardware

```
Switch#show interfaces status | inc connected
Gi1/0/1                  connected    trunk      a-full     10 10/100/1000BaseTX
Gi1/0/2                  connected    101        a-full  a-100 10/100/1000BaseTX
Gi1/0/24                 connected    1          a-full a-1000 10/100/1000BaseTX
```


© 2011 Cisco and/or its affiliates. All rights reserved.

Link Issues: Checking Physical Cabling

- Use the **TDR feature** on the port to determine possible cabling issues: miswiring or cable breaks
- Interfaces will be brought down and up when run on active ports

```
Switch# test cable-diagnostics tdr interface GigabitEthernet4/0/1
TDR test started on interface Gi4/0/1
A TDR test can take a few seconds to run on an interface
Use 'show cable-diagnostics tdr' to read the TDR results.
Switch#
%LINEPROTO-5-UPDOWN: Line protocol on Interface GigabitEthernet4/0/1, changed state to down
%LINK-3-UPDOWN: Interface GigabitEthernet4/0/1, changed state to down
*%LINK-3-UPDOWN: Interface GigabitEthernet4/0/1, changed state to up
%LINEPROTO-5-UPDOWN: Line protocol on Interface GigabitEthernet4/0/1, changed state to upw

Switch# show cable-diagnostics tdr interface GigabitEthernet4/0/1
TDR test last run on: March 01 03:11:11

Interface Speed Local pair Pair length        Remote pair Pair status
--------- ----- ---------- ------------------ ----------- --------------------
Gi4/0/1   1000M Pair A     3    +/- 1  meters Pair A      Normal
                Pair B     2    +/- 1  meters Pair B      Normal
                Pair C     3    +/- 1  meters Pair C      Normal
                Pair D     3    +/- 1  meters Pair D      Normal
```


© 2011 Cisco and/or its affiliates. All rights reserved.

Link Issues: Port Status and Counters

Traditional interface level statistics command

```
Switch# show interface GigabitEthernet 1/0/1
GigabitEthernet1/0/1 is up, line protocol is up (connected)
  ....
  Input queue: 0/75/0/0 (size/max/drops/flushes); Total output drops: 0

  Output queue: 0/40 (size/max)

     75390 packets input, 9856388 bytes, 0 no buffer
     Received 40607 broadcasts (40593 multicasts)
     0 runts, 0 giants, 0 throttles
     0 input errors, 0 CRC, 0 frame, 0 overrun, 0 ignored
     0 watchdog, 40593 multicast, 0 pause input
     0 input packets with dribble condition detected
     350898 packets output, 35603065 bytes, 0 underruns
     0 output errors, 0 collisions, 4 interface resets
     0 babbles, 0 late collision, 0 deferred
     0 lost carrier, 0 no carrier, 0 PAUSE output
     0 output buffer failures, 0 output buffers swapped out
```

```
Switch# show int gi1/0/1 counters

Port            InOctets    InUcastPkts    InMcastPkts    InBcastPkts
Gi1/0/1          9856388          75390          40593             14

Port           OutOctets   OutUcastPkts   OutMcastPkts   OutBcastPkts
Gi1/0/1         35603065         350898          30567             23
```


© 2011 Cisco and/or its affiliates. All rights reserved. Cisco Public

Link Issues: What Kind of Errors?

```
Switch# show interfaces GigabitEthernet 1/0/1 counters errors

Port        Align-Err     FCS-Err    Xmit-Err     Rcv-Err  UnderSize  OutDiscards
Gi1/0/1             0           0           0           0          0            0

Port      Single-Col  Multi-Col   Late-Col  Excess-Col  Carri-Sen      Runts     Giants
Gi1/0/1            0          0          0           0          0          0          0
```

```
Switch# show interfaces counters errors

Port        Align-Err     FCS-Err    Xmit-Err     Rcv-Err  UnderSize  OutDiscards
Gi1/0/1             0           0           0           0          0            0
Gi1/0/2             0           0           0           0          0            0
<snip>
Gi2/0/12            0           0           0           0          0            0

Port      Single-Col  Multi-Col   Late-Col  Excess-Col  Carri-Sen      Runts     Giants
Gi1/0/1            0          0          0           0          0          0          0
Gi1/0/2            0          0          0           0          0          0          0
```

See Appendix A for Error Explanation

© 2011 Cisco and/or its affiliates. All rights reserved.

Link Issues: Ethernet Controller Stats

- Details about errors as well as packet sizes.
- Stats can be cleared

```
Switch# show controller ethernet-controller GigaBitEthernet 1/0/1

Transmit GigabitEthernet4/0/1                Receive
            0 1 collision frames                     0 Alignment errors
            0 2 collision frames                     0 FCS errors
            0 3 collision frames                     0 Oversize frames
            0 4 collision frames                     0 Undersize frames
            0 5 collision frames                     0 Collision fragments
            ..
            0 Excessive collisions                   0 Symbol error frames
            0 Late collisions                        0 Invalid frames, too large
            0 VLAN discard frames                    0 Valid frames, too large
            0 Excess defer frames                    0 Invalid frames, too small
         ..
```


© 2011 Cisco and/or its affiliates. All rights reserved.

Link Issues: Overall Stats From Port-ASIC

- Gives overview of possible drops/issues on the switch
- Local and Member switches

```
Switch# remote command 4 show controller ethernet-controller port-asic statistics
```

Execute this command on member 4

© 2011 Cisco and/or its affiliates. All rights reserved.

Link Issues: Mapping Interfaces to Port-ASIC

- Show platform pm if-number shows this mapping
- Physical and ASIC port numbers may not match
- This command shows all members

```
Switch# show platform pm if-numbers

interface gid  gpn  lpn  port slot unit slun port-type lpn-idb gpn-idb
-----------------------------------------------------------------------
Gi3/0/1   109  109  1    1/1  3    1    1    local     Yes     Yes
Gi3/0/2   110  110  2    1/0  3    2    2    local     Yes     Yes
Gi3/0/3   111  111  3    1/3  3    3    3    local     Yes     Yes
Gi3/0/4   112  112  4    1/2  3    4    4    local     Yes     Yes
Gi3/0/5   113  113  5    1/5  3    5    5    local     Yes     Yes
Gi3/0/6   114  114  6    1/4  3    6    6    local     Yes     Yes
Gi3/0/7   115  115  7    1/7  3    7    7    local     Yes     Yes
```

ASIC/Port

© 2011 Cisco and/or its affiliates. All rights reserved.

Link Issues: Port-ASIC Statistics

View Asic stats for Ingress Queue (enqueue'd and dropped) & supervisor Queue
- output is different for C3750X than C3750G
- C2960S does not have ingress Queues.

```
Switch# show controllers ethernet-controller port-asic statistics

==========================================================================
Switch 2, PortASIC 0 Statistics
--------------------------------------------------------------------------
        0 RxQ-0, wt-0 enqueue frames            0 RxQ-0, wt-0 drop frames
  8811506 RxQ-0, wt-1 enqueue frames            0 RxQ-0, wt-1 drop frames
        0 RxQ-0, wt-2 enqueue frames            0 RxQ-0, wt-2 drop frames

        0 RxQ-1, wt-0 enqueue frames            0 RxQ-1, wt-0 drop frames
              <snip>
      100 TxBufferFull Drop Count               0 Rx Fcs Error Frames
        ...
        0 SneakQueue Drop Count                 0 Tx Too Old Frames
        ...

        0 Sup Queue 0 Drop Frames               0 Sup Queue 8 Drop Frames
        <snip>
        0 Sup Queue 7 Drop Frames               0 Sup Queue 15 Drop Frames
```


© 2011 Cisco and/or its affiliates. All rights reserved. Cisco Public

Link Issues: Egress Queue Drops

- Queue and weight are 0-based
- Tuning of buffers is only possible when QoS is enabled
- Drops on egress indicate oversubscription

```
Switch# show platform port-asic stats drop gigabitEthernet 1/0/3

  Interface Gi1/0/3 TxQueue Drop Statistics
    Queue 0
      Weight 0 Frames 0
      Weight 1 Frames 0
      Weight 2 Frames 0
    ...
    Queue 3
      Weight 0 Frames 100000
      Weight 1 Frames 0
      Weight 2 Frames 0
```

More information in the QOS section

```
Switch# show platform port-asic stats enqueue gi1/0/3
```


© 2011 Cisco and/or its affiliates. All rights reserved.

Troubleshooting Link Issues

Command Summary

Troubleshooting Steps	Commands
Cabling issues	`test cable-diagnostics tdr interface`
Interface not coming up	`Show interface status` `Show interface .. Counters errors`
ASIC counters	`show controller ethernet-controller` `show controller ethernet-controller port-asic statistics`
Egress Queue Stats	`show platform port-asic stats drop` `show platform port-asic stats enqueue`
Interface asic mapping	`Show platform pm if-numbers`

© 2011 Cisco and/or its affiliates. All rights reserved.

Agenda

- Product Overview
- Troubleshooting
  - CPU
  - Memory
  - Local Link Issues
  - Layer 2 Forwarding
  - Layer 3 IP Unicast
  - Quality of Service
  - TCAM resource
  - Stacking (StackWise and StackWise Plus)
  - General Switch Health
- Summary

3750-X

3750-E

3750

3560-X

3560-E

3560

2960-S

Compact

2960

© 2011 Cisco and/or its affiliates. All rights reserved.

Cisco Public

Troubleshooting Unicast Forwarding

- Symptom: Host cannot reach server
- Steps
  - Layer 1 operational between host/Phone and switch?
  - Switch receiving traffic on that interface?
  - Congestion between host and switch?
  - MAC address learned?
  - MAC address of next hop correct?
  - Spanning tree state forwarding?
  - Other features preventing traffic flow?
    - Errored packets on the interface
  - Check HW programming
- Consider possibilities
- Create and execute action plan

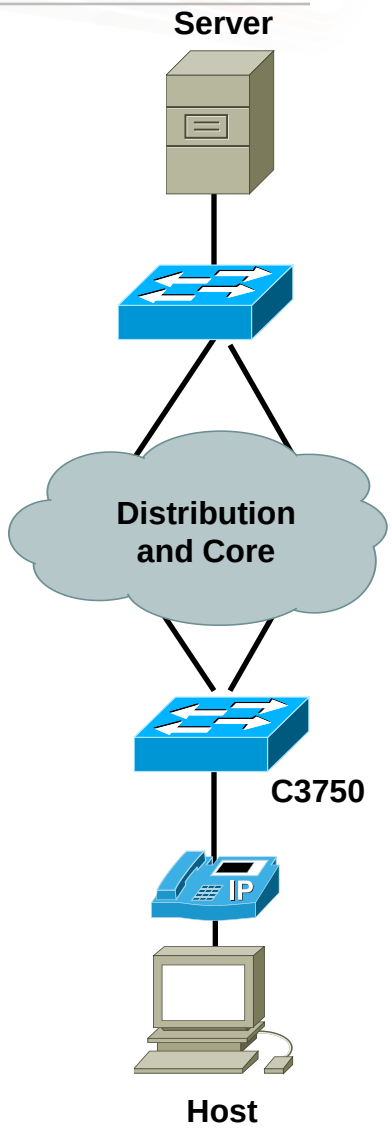

© 2011 Cisco and/or its affiliates. All rights reserved.

L2 Forwarding: Troubleshooting - 1

- Step 1: Verify if the link is up

```
Switch# show interface Gi1/0/3 status
Port      Name                Status       Vlan       Duplex  Speed Type
Gi1/0/3                       connected    10         a-full  a-100 10/100/
                                                                    1000BaseTX
```

- Step 2: Verify if the port is in the right vlan and is forwarding

```
Switch# show spanning-tree interface Gi1/0/3
Vlan                 Role Sts Cost      Prio.Nbr Type
------------------- ---- --- --------- -------- ----------------------
VLAN010              Desg FWD 19        128.2    P2p
```

- Step 3: Check if the packets are being received/sent on the port

```
Switch# show interfaces gigabitEthernet 1/0/3 counters
Port            InOctets    InUcastPkts    InMcastPkts    InBcastPkts
Gi1/0/3          2108289             48              0           6813

Port           OutOctets   OutUcastPkts   OutMcastPkts   OutBcastPkts
Gi1/0/3         36817803          48229         252940          72564
```

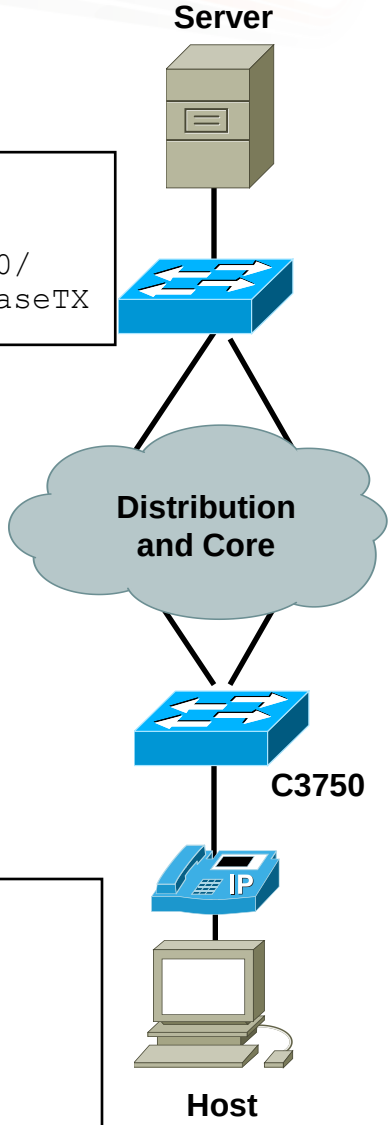

© 2011 Cisco and/or its affiliates. All rights reserved.

Layer 2 Forwarding: Troubleshooting – 2 MAC Checking

- Step 4a: Verify if the Mac-address is correctly learned on the port

```
Switch# show mac address-table interface gigabitEthernet 1/0/3
          Mac Address Table
-------------------------------------------

Vlan    Mac Address       Type        Ports
----    -----------       --------    -----
 10     00b1.a3d3.4321    DYNAMIC     Gi1/0/3
Total Mac Addresses for this criterion: 1
```

- Step 4b: Verify if the destination Mac-address is learned on the switch on the expected port

```
Switch# show mac address-table dynamic address 00b1.a3d3.1234
          Mac Address Table
-------------------------------------------

Vlan    Mac Address       Type        Ports
----    -----------       --------    -----
 10     00b1.a3d3.1234    DYNAMIC     Gi1/0/4
Total Mac Addresses for this criterion: 1
```

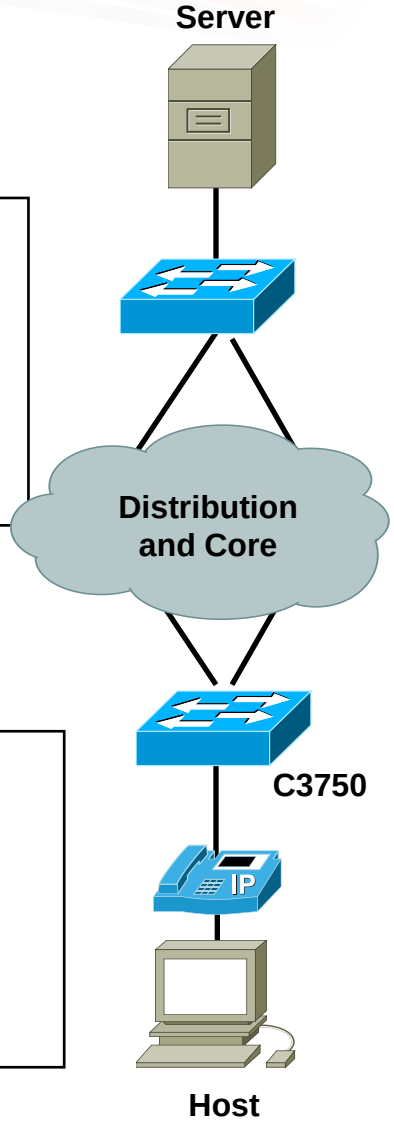

© 2011 Cisco and/or its affiliates. All rights reserved.

Layer 2 Forwarding: Troubleshooting – 3 Spanning Tree

- Step 5: Spanning tree state forwarding in software?

```
Switch#show spanning-tree vlan 10

VLAN0010
  Spanning tree enabled protocol ieee
  Root ID    Priority    32778
             Address     0003.fd6b.0700
             This bridge is the root
             Hello Time   2 sec  Max Age 20 sec  Forward Delay 15

  Bridge ID  Priority    32778  (priority 32768 sys-id-ext 10)
             Address     0003.fd6b.0700
             Hello Time   2 sec  Max Age 20 sec  Forward Delay 15 sec
             Aging Time  300 sec

Interface           Role Sts Cost      Prio.Nbr Type
------------------- ---- --- --------- -------- -------------------------
Gi1/0/3             Desg FWD 4         128.3    P2p
Gi1/0/4             Desg FWD 4         128.4    P2p Edge
```

Interfaces are FWDing

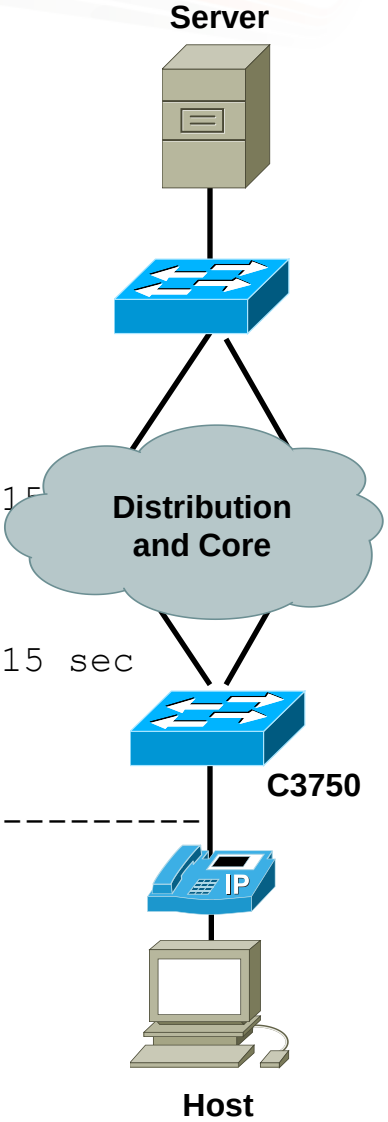

© 2011 Cisco and/or its affiliates. All rights reserved.

Layer 2 Forwarding: Troubleshooting – 4 Interface

- Step 6a: Check Interfaces for Error-Disabled

```
Switch# show interface status err-disabled

Switch#
```

Nothing in list.
No interfaces are Disabled

- Step 6b: Check Interface counters for errors

```
Switch#show interface gi1/0/3 counters errors

Port        Align-Err     FCS-Err    Xmit-Err     Rcv-Err  UnderSize  OutDiscards
Gi1/0/3             0           0           0           0          0            0

Port      Single-Col  Multi-Col   Late-Col  Excess-Col  Carri-Sen      Runts      Giants
Gi1/0/3            0          0          0           0          0          0           0
Switch#
Switch#show interface gi1/0/4 counters errors

Port        Align-Err     FCS-Err    Xmit-Err     Rcv-Err  UnderSize  OutDiscards
Gi1/0/4             0           0           0           0          0            0

Port      Single-Col  Multi-Col   Late-Col  Excess-Col  Carri-Sen      Runts      Giants
Gi1/0/4            0          0          0           0          0          0           0
```

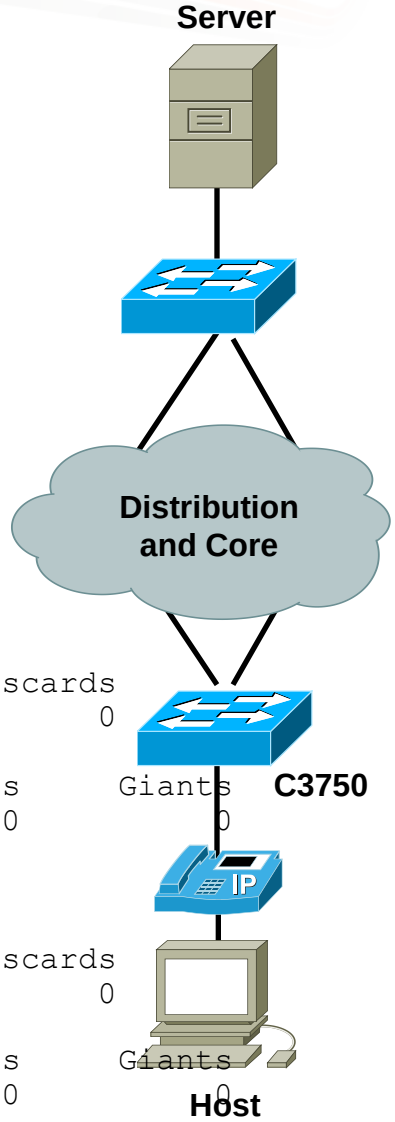

© 2011 Cisco and/or its affiliates. All rights reserved.

Layer 2 Forwarding: Troubleshooting – 5 Advanced Techniques

- Step 7: Use show platform forward to verify the hardware programming – find Egress Interface

Switch# show platform forward <ingress intf> <srcmac> <dstmac>

```
Switch# show platform forward gigabitEthernet 1/0/3 0000.0000.4321  0000.0000.1234
Ingress:
Global Port Number: 3, lpn: 1 ASIC Number: 6
Source Vlan Id: Real 10, Mapped 2. L2EncapType 0, L3EncapType 3
Hashes: L2Src 0x00 L2Dst 0x0B L3Src 0x00 L3Dst 0x0B
 Lookup                    Key-Used                    Index-Hit    A-Data
Classify 68_00F00000_00001234-02_00000000_00004321      0102E   00000002
InputACL 20_00F00000_00001234-00_00000000_00004321      01FF8   01000000
L2LrnMsk FF_03FFFFFF_FFFFFFFF-00_000003FF_00000000
L2Learn  83_00020000_00004321-C3_00000803_00000000      00EB8   00000045
L2FwdMsk FF_03FFFFFF_FFFFFFFF
L2Fwd    83_00020000_00001234                           00EB6   000000B5
Station Descriptor: F004F002, DestIndex: F004, RewriteIndex: F002
=========================================
Egress: ASIC 6, switch 1
Source Vlan Id: Real 10, Mapped 2. L2EncapType 0, L3EncapType 3
portMap 0x4, non-SPAN portMap 0x4

Output Packets:
-----------------------------------------
GigabitEthernet1/0/4 Packet 1
 Lookup                    Key-Used                    Index-Hit    A-Data
OutptACL 30_00F00000_00001234-00_00000000_00004321      01FFC   01000000

Port        Vlan       SrcMac           DstMac     Cos   Dscpv
Gi1/0/4     0010   0000.0000.4321   0000.0000.1234
```

Destination Interface

© 2011 Cisco and/or its affiliates. All rights reserved.

L2: Mac-Address Disappears From a Port

- Check for spanning tree topology changes
- Does the link remain up?
- Is it learned on another port?

Link down causes MAC Addresses to be flushed

```
Switch# show spanning-tree vlan 10 detail

.
.
.
  Number of topology changes 5 last change occurred 18:45:22 ago
          from GigabitEthernet1/0/3
  ...
```


© 2011 Cisco and/or its affiliates. All rights reserved.

Checklist: Interface Troubleshooting

- Are packets being received?
- Is the expected Mac-address learned on another port?
- Check if dot1x is in use, if so, is the port authorized?
- Does port security allow more Mac-addresses?
- Is the port in spanning tree forwarding?
- Other features preventing traffic flow?
  - ACLs
- Show logging – is there a history of instability

© 2011 Cisco and/or its affiliates. All rights reserved.

Troubleshooting Unicast Forwarding

Command Summary

Troubleshooting Steps	Commands
Verify Layer 1 is operational between host and switch	`show interface <interface> status`
Verify switch receives traffic on the interface	`show interfaces <interface> counters` `show interfaces <interface> counters errors`

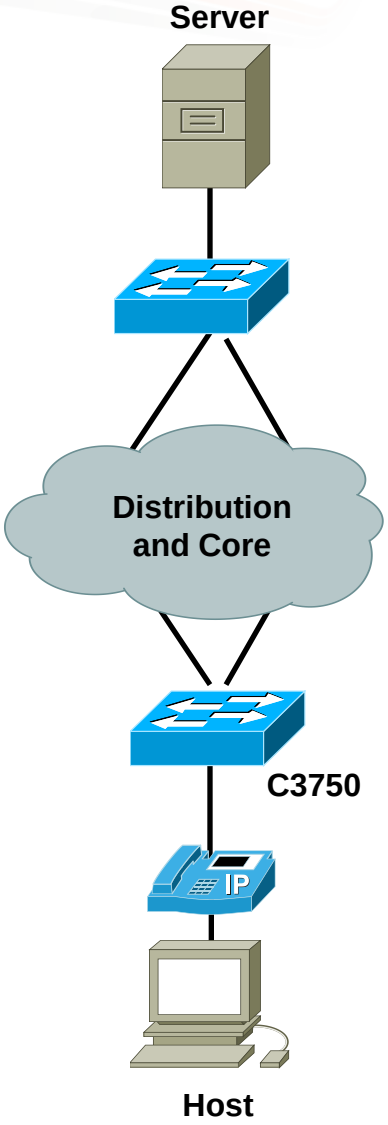

© 2011 Cisco and/or its affiliates. All rights reserved.

Troubleshooting Unicast Forwarding

Command Summary (Cont.)

Troubleshooting Steps	Commands
Verify host MAC address is learned	`show mac address-table interface <interface>` `show mac address-table dynamic address <mac>`
Verify spanning tree state is forwarding	`show spanning-tree vlan <vlan>` `Show spanning-tree vlan <vlan> detail`
Verify MAC address of next hop is correct	`Local and remote switches:` `show mac address-table vlan <vlan>`

Verify other features are not preventing traffic flow	`show dot1x interface <interface> details`
	`Show port-security interface <interface>`
	`show ip access-lists interface <interface>`

Show hardware programming for MAC Address	`show platform forward <src interface> <src-mac> <dest-mac>`

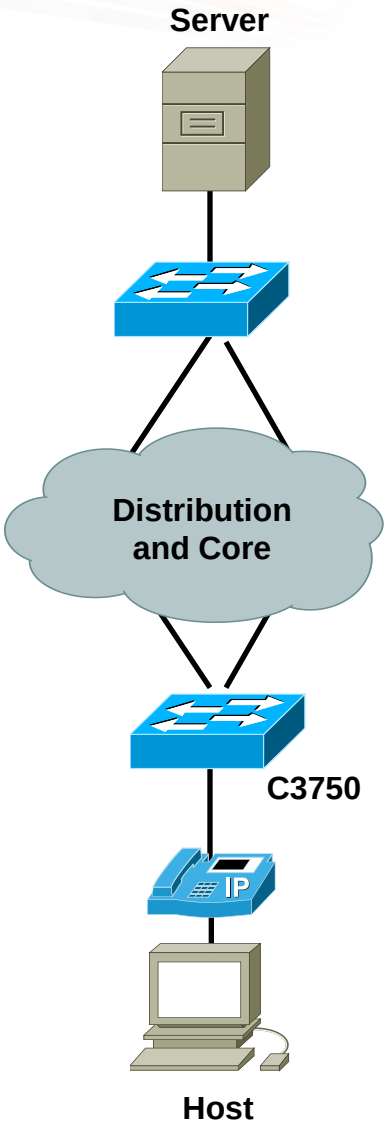

© 2011 Cisco and/or its affiliates. All rights reserved.

Agenda

- Product Overview
- Troubleshooting
  - CPU
  - Memory
  - Local Link Issues
  - Layer 2 Forwarding
  - Layer 3 IP Unicast
  - Quality of Service
  - TCAM resource
  - Stacking (StackWise and StackWise Plus)
  - General Switch Health
- Summary

3750-X

3750-E

3750

3560-X

3560-E

3560

2960-S

Compact

2960

© 2011 Cisco and/or its affiliates. All rights reserved.

Cisco Public

Layer 3 IP Unicast Routing

- Use the switch to debug end to end IP issues
- Verify IP reachability from switch end host
- Verify destination reachability from the switch
- Verify hardware forwarding from source to destination (and back)

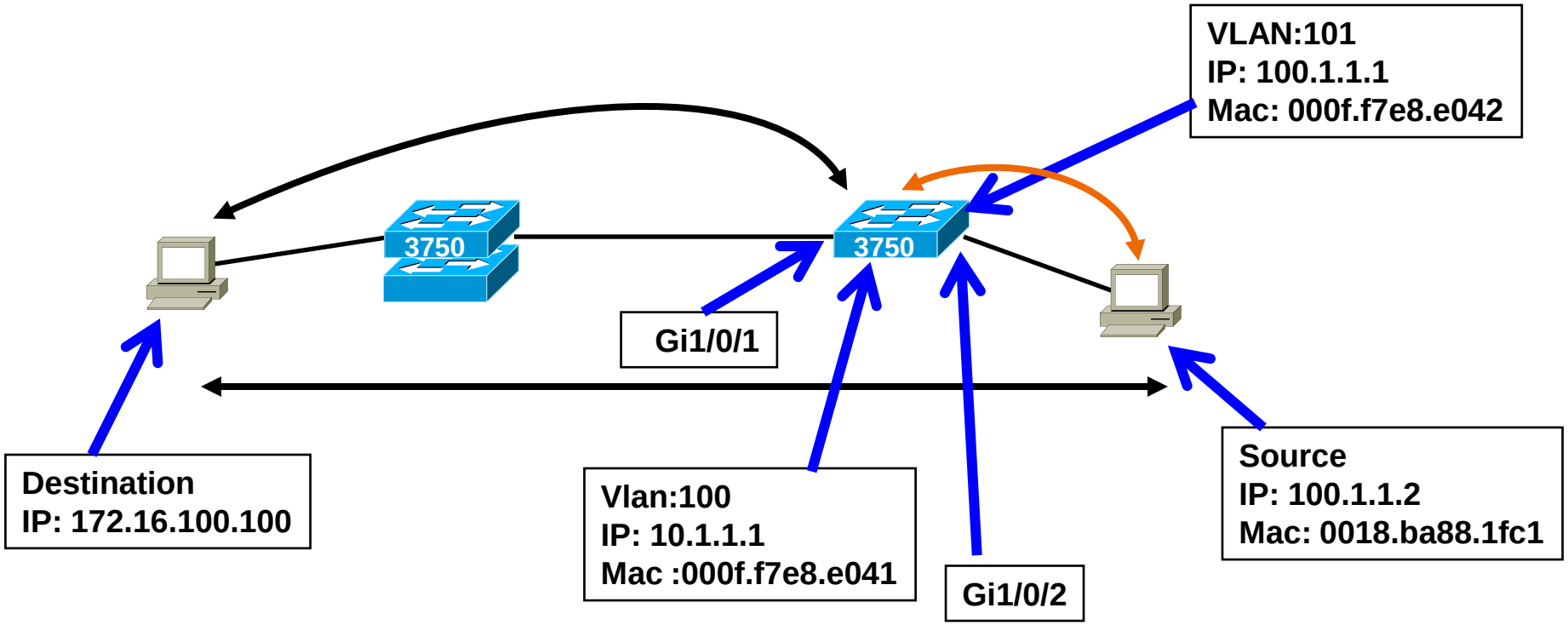

© 2011 Cisco and/or its affiliates. All rights reserved.

L3: Verify Source Reachability

- Source IP = 100.1.1.2
- PING the source
- PING the source with a loopback
- Verify the ARP table
- Verify the MAC table

© 2011 Cisco and/or its affiliates. All rights reserved.

L3: Verify Source Reachability

```
3750# ping 100.1.1.2

Type escape sequence to abort.
Sending 5, 100-byte ICMP Echos to 100.1.1.2, timeout is 2 seconds:
!!!!!
Success rate is 100 percent (5/5), round-trip min/avg/max = 1/4/9 ms

3750# ping 100.1.1.2 source lo0
Type escape sequence to abort.
Sending 5, 100-byte ICMP Echos to 100.1.1.2, timeout is 2 seconds:
Packet sent with a source address of 99.1.1.1
!!!!!
Success rate is 100 percent (5/5), round-trip min/avg/maz = 1/4/9 ms

3750# sh ip arp vlan 101
Protocol  Address          Age (min)  Hardware Addr   Type   Interface
Internet  100.1.1.1               -   000f.f7e8.e042  ARPA   Vlan101
Internet  100.1.1.2              23   0018.ba88.1fc1  ARPA   Vlan101

3750# sh mac address-table address 0018.ba88.1fc1
          Mac Address Table
-------------------------------------------

Vlan    Mac Address       Type        Ports
----    -----------       --------    -----
 101    0018.ba88.1fc1    DYNAMIC     Gi1/0/2
Total Mac Addresses for this criterion: 1
```

Change source IP to loopback

© 2011 Cisco and/or its affiliates. All rights reserved.

L3: Verify Source Reachability - 2

- Verify packets from the source are getting to the CPU

```
Switch# show plat for <ingress intf> <srcmac> <dstmac> ip <srcip> <dstip> icmp <0-255> <0-255>
```

```
3750#show platform for Gi1/0/2 0018.ba88.1fc1 000f.f7e8.e042 ip 100.1.1.2 100.1.1.1 icmp 0 0
Ingress:
Global Port Number: 1, lpn: 3 Asic Number: 1
Source Vlan Id: Real 101, Mapped 9. L2EncapType 0, L3EncapType 0
Hashes: L2Src 0x03 L2Dst 0x05 L3Src 0x09 L3Dst 0x03
 Lookup                    Key-Used                    Index-Hit    A-Data
Classify 78_64010101_64010102-00_01000000_00000100     017FE   00000000
InputACL 40_64010101_64010102-00_01000000_00000100     01FFA   03000000
L2LrnMsk FF_03FFFFFF_FFFFFFFF-00_000003FF_00000000
L2Learn  80_00090018_BA881FC1-C0_00002401_00000000     00E54   00000040
L3LclMsk FF_FF8FFC00_FFFFFFFF
L3Local  C0_00302401_64010101                          01CF0   00000000
L3Scndr  10_64010101_64010102-00_00000000_00000100     008AA   000A0008_00000000
Lookup Used: Secondary
Station Descriptor: 00B00000, DestIndex: 00B0, RewriteIndex: 0000

==========================================
<output removed>
Output Packets:
==========================================
Egress: Asic 0, switch 2
        CPU queues: 7 14.
Source Vlan Id: Real 101, Mapped 9. L2EncapType 0, L3EncapType 0
portMap 0x0, non-SPAN portMap 0x0
```

Packet arriving on CPU queue 7 (host) & 14 (dstats)

© 2011 Cisco and/or its affiliates. All rights reserved.

L3: Verify Destination Reachability

- Destination IP = 172.16.100.100
- Verify there is a route to the destination
- Verify there is a valid ARP for the next hop
- PING the destination
- PING the destination using VLAN of source as the source address

© 2011 Cisco and/or its affiliates. All rights reserved.

L3: Verify Destination Reachability - 1

Show next hop to final destination

```
3750# sh ip route 172.16.100.100
Routing entry for 172.16.100.0/24
  Known via "ospf 1", distance 110, metric 20, type extern 2, forward metric 1
  Last update from 10.1.1.2 on Vlan100, 00:08:54 ago
  Routing Descriptor Blocks:
  * 10.1.1.2, from 100.1.1.2, 00:08:54 ago, via Vlan100
      Route metric is 20, traffic share count is 1
```

verify next hop is known

```
3750# sh ip arp 10.1.1.2
Protocol  Address          Age (min)  Hardware Addr   Type   Interface
Internet  10.1.1.2                9   0018.ba88.1fc1  ARPA   Vlan100
```

```
Switch# ping 172.16.100.100
Type escape sequence to abort.
Sending 5, 100-byte ICMP Echos to 172.16.100.100, timeout is 2 seconds:
!!!!!
Success rate is 100 percent (5/5), round-trip min/avg/max = 1/1/1 ms
```

```
3750# ping 172.16.100.100 source vlan 101
Type escape sequence to abort.
Sending 5, 100-byte ICMP Echos to 172.16.100.100, timeout is 2 seconds:
Packet sent with a source address of 192.168.100.1
!!!!!
Success rate is 100 percent (5/5), round-trip min/avg/max = 1/2/8 ms
```


© 2011 Cisco and/or its affiliates. All rights reserved. Cisco Public

Troubleshooting L3

Command Summary

Troubleshooting Steps	Commands

Verify source reachability	`ping`
	`show ip arp vlan`
	`sh mac address-table address`

Verify destination reachability	`show ip route`
	`show ip arp`
	`ping`

Verify HW programming	`show platform forward <ingress intf> <srcmac> <dstmac> ip <srcip> <dstip>`

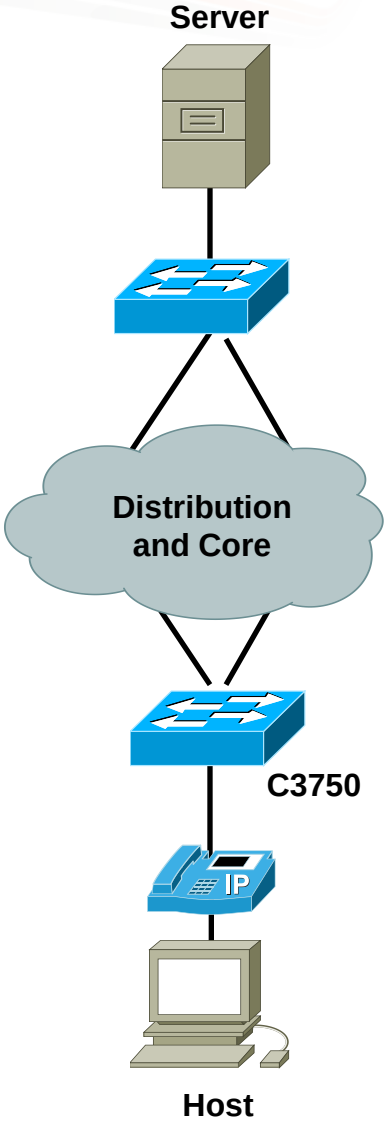

© 2011 Cisco and/or its affiliates. All rights reserved.

Agenda

- Product Overview
- Troubleshooting
  - CPU
  - Memory
  - Local Link Issues
  - Layer 2 Forwarding
  - Layer 3 IP Unicast
  - Quality of Service
  - TCAM resource
  - Stacking (StackWise and StackWise Plus)
  - General Switch Health
- Summary

3750-X

3750-E

3750

3560-X

3560-E

3560

2960-S

Compact

2960

© 2011 Cisco and/or its affiliates. All rights reserved.

Cisco Public

QOS Agenda

- QOS Architecture
- Ingress QOS

  Why have Ingress QOS?
- Egress QOS

  The source of most OQS problems is egress congestion
- Traffic Classification Maps

© 2011 Cisco and/or its affiliates. All rights reserved.

Cisco Catalyst 3750 Family
QoS Model

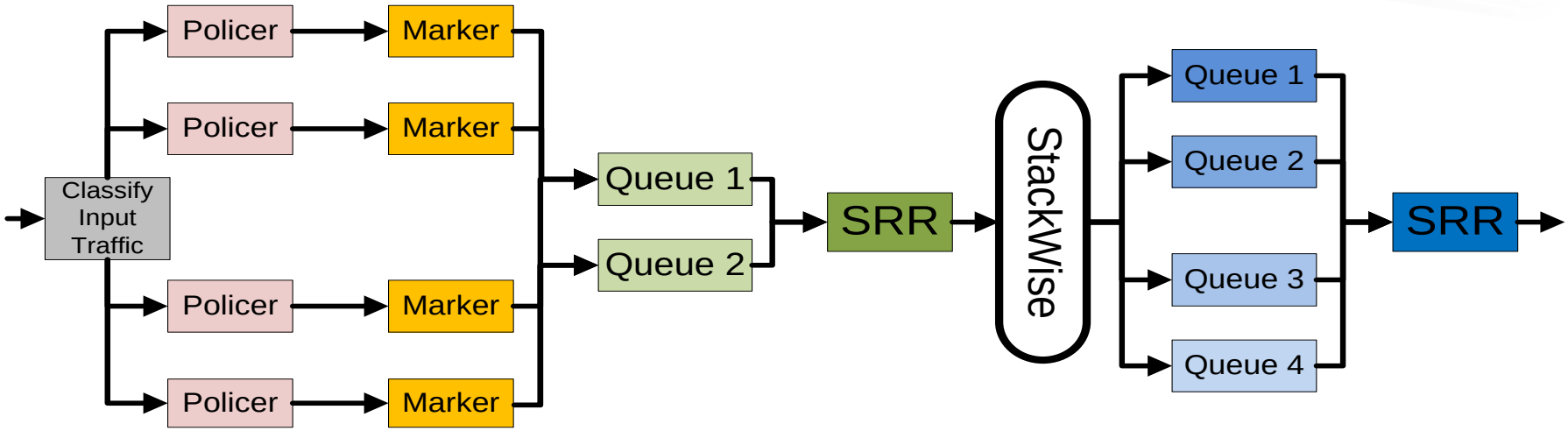

Classification	Policing	Marking	Ingress Queue/ Schedule Congestion Control	Egress Queue/ Schedule Congestion Control
• Inspect incoming packets • Assign QOS Label to grouped packet • Use ACL, or other configuration to determine QOS labels	• Compares incoming traffic rate w/ configured policer and determine if packet is **IN** or **Out** of Profile. • Either aggregate or individual flow basis • 256 policers/ASIC	• Act on policer decision • Reclass or drop out-of-profile	• Two queues/port ASIC shared servicing • One queue is configurable for strict priority servicing • WTD for congestion control (three thresholds per queue) • SRR is performed	• Four SRR queues/port shared or shaped servicing • One queue is configurable for strict priority servicing • WTD for congestion control (three thresholds per queue) • Egress queue shaping • Egress port rate limiting

© 2011 Cisco and/or its affiliates. All rights reserved.

Cisco Catalyst 2960S – No Ingress Queue
QoS Model

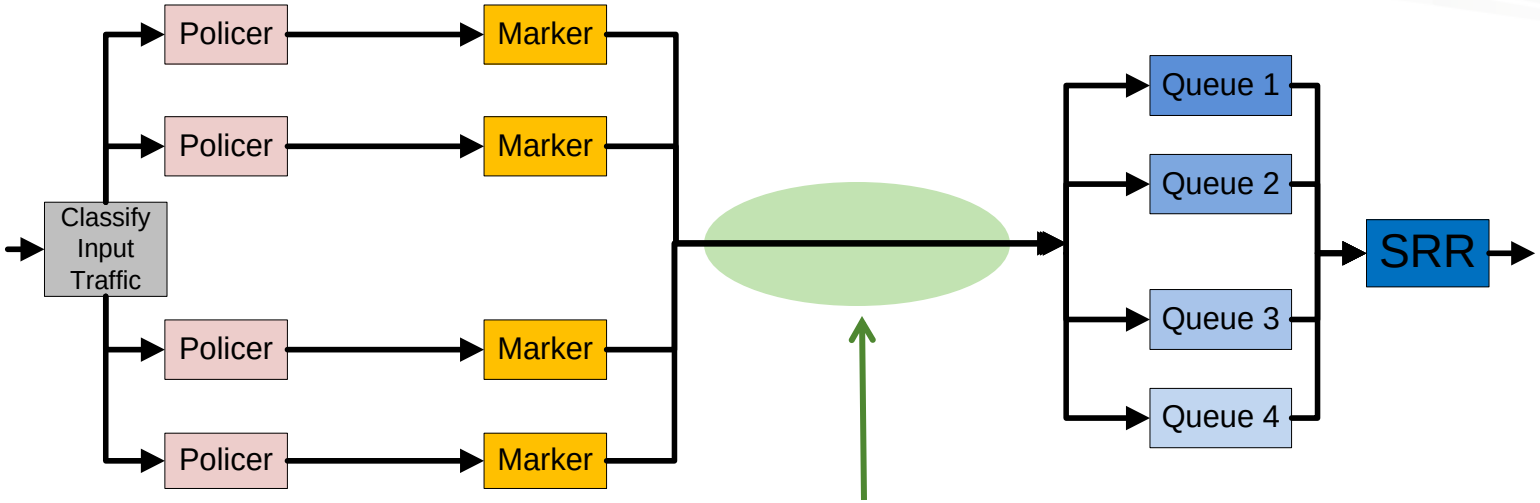

Classification	Policing	Marking	NO Ingress Queues	Egress Queue/ Schedule Congestion Control
• Inspect incoming packets • Assign QOS Label to grouped packet • Use ACL, or other configuration to determine QOS labels	• Compares incoming traffic rate w/ configured policer and determine if packet is **IN** or **Out** of Profile. • Either aggregate or individual flow basis • 256 policers/ASIC	• Act on policer decision • Reclass or drop out-of-profile		• Four SRR queues/port shared or shaped servicing • One queue is configurable for strict priority servicing • WTD for congestion control (three thresholds per queue) • Egress queue shaping • Egress port rate limiting

© 2011 Cisco and/or its affiliates. All rights reserved. Cisco Public

Egress Queuing

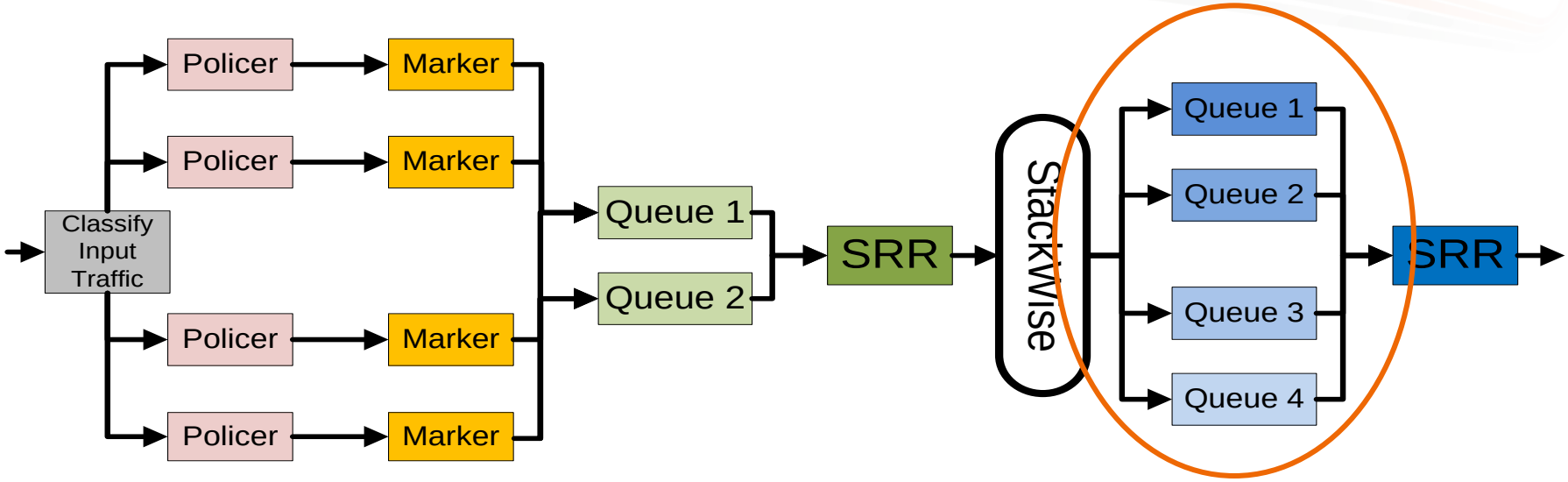

- The Cisco Catalyst 3750/2960 have four egress queues
- Queue 1 is optionally the priority queue
- Port-based bandwidth limiting can be configured from 10% to 90%
- These Egress queues, perform Shaped Round Robin SRR in queue sharing and queue shaping mode
- Weighted Tail Drop (WTD) for congestion management

© 2011 Cisco and/or its affiliates. All rights reserved.

Egress Queuing

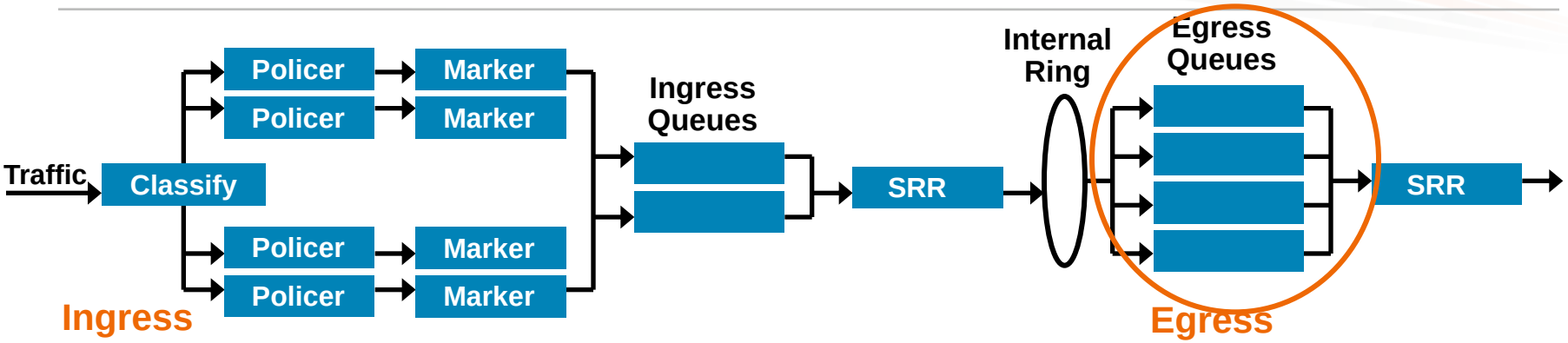

- The Cisco Catalyst 3750/2960 have four egress queues
- Queue 1 is optionally the priority queue
- Port-based bandwidth limiting can be configured from 1% to 90%
- These Egress queues, perform Shaped Round Robin SRR in queue sharing and queue shaping mode
- Weighted Tail Drop (WTD) for congestion management

© 2011 Cisco and/or its affiliates. All rights reserved.

Why Ingress QOS

- Ingress QOS responsibilities
  - Ensure traffic classified correctly
  - Police traffic via Service Policy with traffic profiles
  - Security ACLs (covered in next section)
  - Prioritize traffic during Stack congestion
- Symptoms for ingress QOS problems
  - Packets unexpectedly dropped due to Access Service Policy, or stack congestion
  - Packets improperly marked for priority.

© 2011 Cisco and/or its affiliates. All rights reserved.

QoS Troubleshooting - Ingress

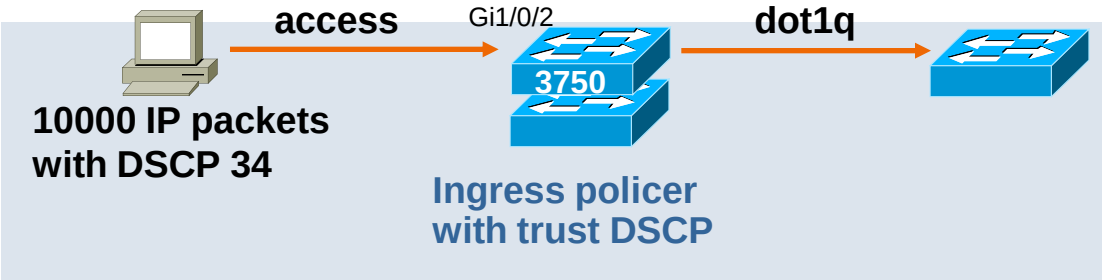


```
Switch# show mls qos interface gigabit 1/0/2 statistics
GigabitEthernet1/0/2 (All statistics are in packets)

  dscp: incoming
-------------------------------

  0 -  4 :           0            0            0            0            0
 30 - 34 :           0            0            0            0        10000
...
Policer: Inprofile:          1467 OutofProfile:         8533
```

- 10,000 packets were received, DSCP value 34
- 1,467 packets were in profile
- 8,533 were dropped due to exceeding the policer

© 2011 Cisco and/or its affiliates. All rights reserved.

QOS: Ingress Queue counts

Ingress statistics

```
C3750G# show controllers ethernet-controller port-asic statistics
==============================================================================
 Switch 1, PortASIC 0 Statistics
------------------------------------------------------------------------------
         0 RxQ-0, wt-0 enqueue frames            0 RxQ-0, wt-0 drop frames
 106652571 RxQ-0, wt-1 enqueue frames            0 RxQ-0, wt-1 drop frames
         0 RxQ-0, wt-2 enqueue frames            0 RxQ-0, wt-2 drop frames

         0 RxQ-1, wt-0 enqueue frames            0 RxQ-1, wt-0 drop frames
    198372 RxQ-1, wt-1 enqueue frames            0 RxQ-1, wt-1 drop frames
  10752708 RxQ-1, wt-2 enqueue frames            0 RxQ-1, wt-2 drop frames
.
.
.
```

- Catalyst switches using Stackwise support this command.

  E-series, X-series or S-series do not.

© 2011 Cisco and/or its affiliates. All rights reserved.

Egress QOS issues

- Congestion is the biggest QOS problem
- Main causes of Congestion

  Transition to slower speed link – packets take longer to egress than ingress

    Eg: Gigabit interfaces for Data Center Servers and old IP Phones

  Over Subscription : Many interfaces transmitting to one egress interface

© 2011 Cisco and/or its affiliates. All rights reserved.

Why Egress QOS? – Rate Transition

- Slower speed interfaces take longer to transmit packets
- Introduction of Gigabit servers pushes congestion to the edge
- QOS drops lowest priority packets

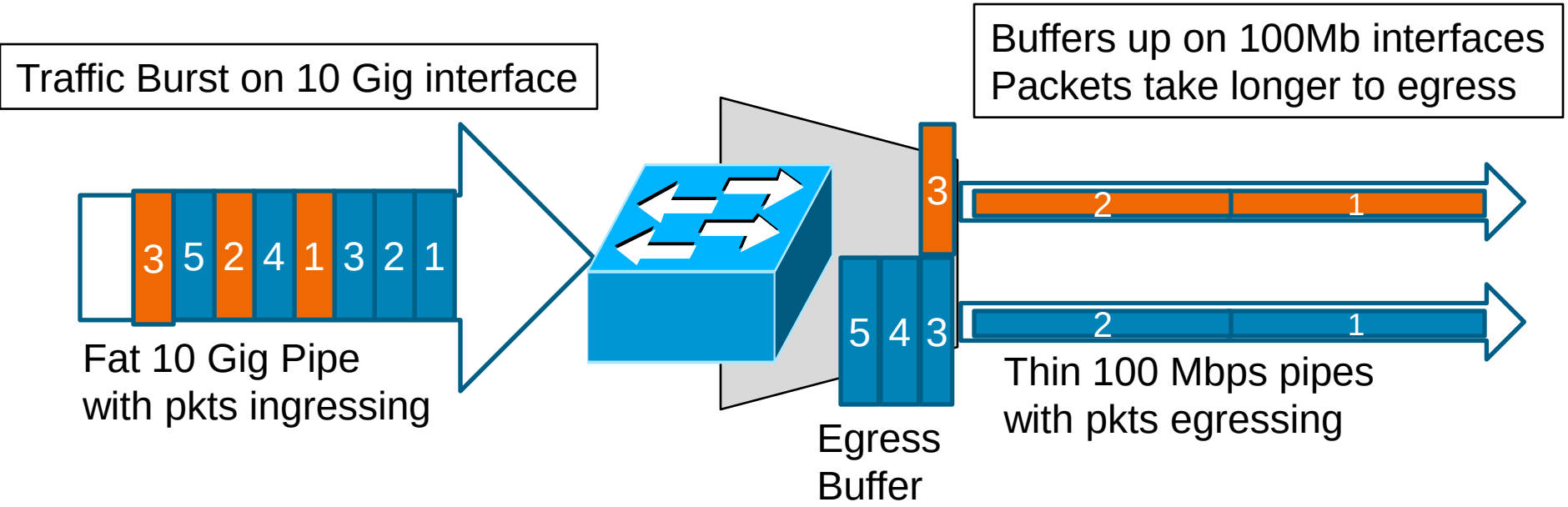

© 2011 Cisco and/or its affiliates. All rights reserved.

QoS Troubleshooting - Ingress

Remember this from a few slides ago??

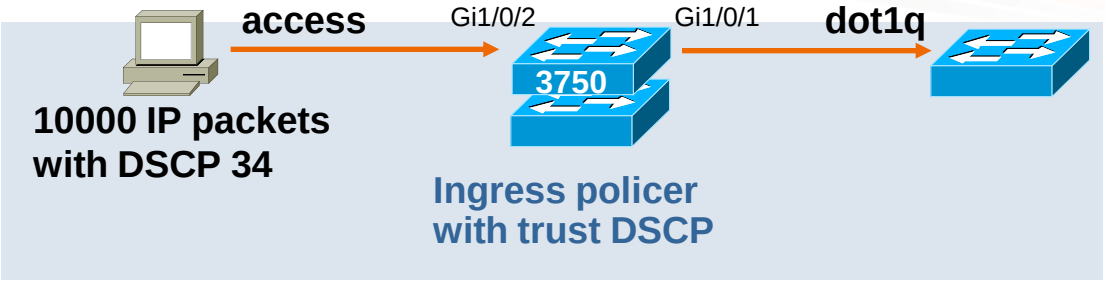


```
Switch# show mls qos interface gigabit 1/0/2 statistics
GigabitEthernet1/0/2 (All statistics are in packets)

  dscp: incoming
-------------------------------

  0 -  4 :           0            0            0            0            0
 30 - 34 :           0            0            0            0        10000
...
Policer: Inprofile:          1467 OutofProfile:         8533
```

- 1,467 packets were in profile, and forwarded to egress interface

© 2011 Cisco and/or its affiliates. All rights reserved.

QoS Troubleshooting - Egress

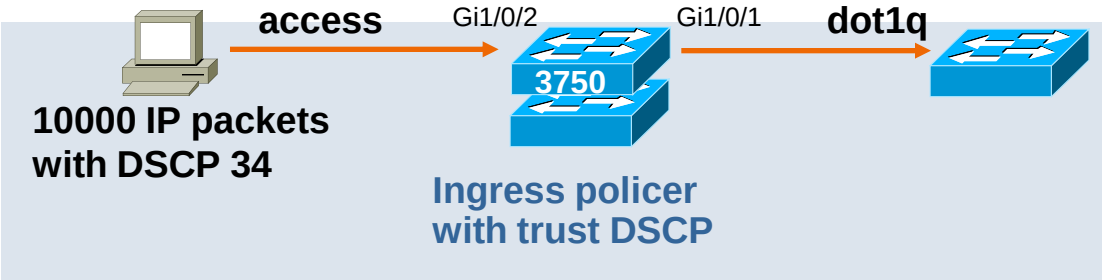


```
Switch#sh mls qos interface gigabitEthernet 1/0/1 statistics
GigabitEthernet1/0/1 (All statistics are in packets)
<output removed>
 dscp: outgoing
-------------------------------
<output removed>

          25 - 29 :           0            0            0            0            0
          30 - 34 :           0            0            0            0         1467
<output removed>
```

- 1467 packets were in profile and made it to the egress port
- DSCP is 34

© 2011 Cisco and/or its affiliates. All rights reserved.

QoS Troubleshooting – Egress (2)

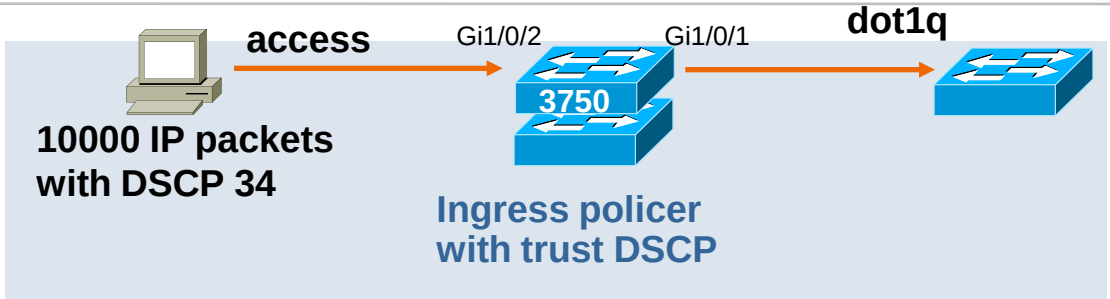


```
Switch#sh mls qos interface gigabitEthernet 1/0/1 statistics
GigabitEthernet1/0/1 (All statistics are in packets)
<output removed>
0 - 4 :          1467            0            0            0            0
30 - 34 :           0            0            0            0            0
```

- 1467 packets were in profile and made it to the egress port.

  DSCP 0 instead of DSCP 34.

- Possible reasons:

  Attached service policy does not mark or trust dscp value

  Traffic is being routed via the CPU

© 2011 Cisco and/or its affiliates. All rights reserved.

QoS Troubleshooting - Egress Q Maps

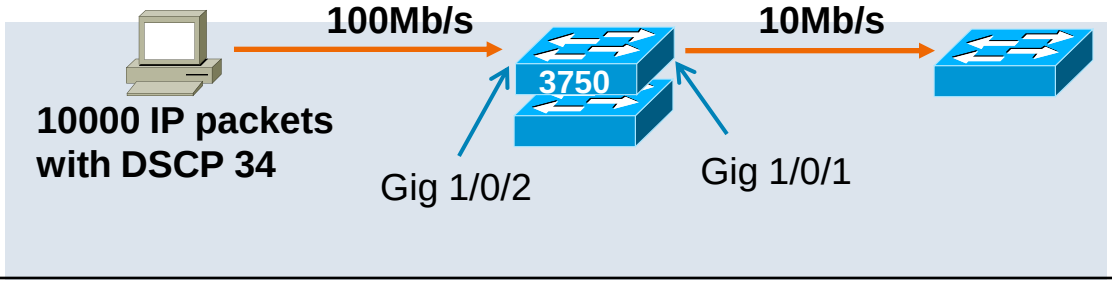


```
Switch# show mls qos maps dscp-output-q
   Dscp-outputq-threshold map:
     d1 :d2    0     1     2     3     4     5     6     7     8     9
     ------------------------------------------------------------
      0 :    02-01 02-01 02-01 02-01 02-01 02-01 02-01 02-01 02-01 02-01
      1 :    02-01 02-01 02-01 02-01 02-01 02-01 03-01 03-01 03-01 03-01
      2 :    03-01 03-01 03-01 03-01 03-01 03-01 03-01 03-01 03-01 03-01
      3 :    03-01 03-01 04-01 04-01 04-01 04-01 04-01 04-01 04-01 04-01
      4 :    01-01 01-01 01-01 01-01 01-01 01-01 01-01 01-01 04-01 04-01
      5 :    04-01 04-01 04-01 04-01 04-01 04-01 04-01 04-01 04-01 04-01
      6 :    04-01 04-01 04-01 04-01

Switch# show mls qos interface gi 1/0/2 statistics
GigabitEthernet1/0/2 (All statistics are in packets)

 dscp: incoming
-------------------------------

  0 -  4 :          0          0          0          0          0
 30 - 34 :          0          0          0          0      10000
```

- 10000 packets are received and will egress on Q4, threshold 1

© 2011 Cisco and/or its affiliates. All rights reserved.

QoS Troubleshooting – Egress Queue Thresholds

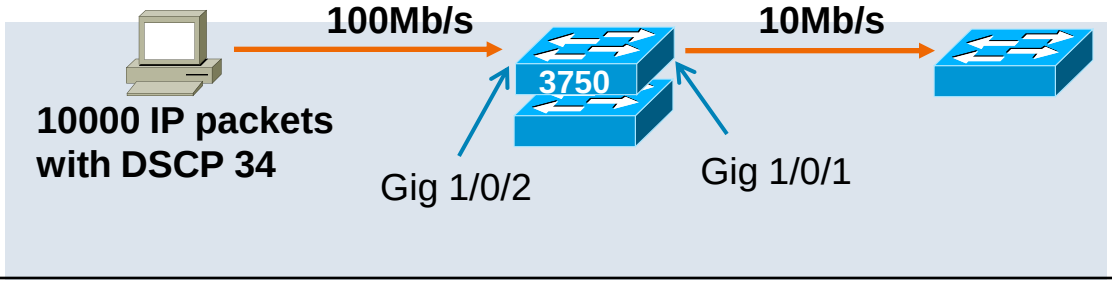


```
Switch# show mls qos interface Gig 1/0/1 statistics
.

  dscp: outgoing
-------------------------------

  0 -  4 :           0            0            0            0            0
 30 - 34 :           0            0            0            0         1080
...
 output queues enqueued:
queue:        threshold1 threshold2 threshold3
-----------------------------------------
 queue 0:           2            0            0
 queue 1:           0            6         4560
 queue 2:           0            0            0
 queue 3:        1080            0            0

  output queues dropped:
queue:          threshold1 threshold2 threshold3
-----------------------------------------
 queue 0:           0            0            0
 queue 1:           0            0            0
 queue 2:           0            0            0
 queue 3:        8920            0            0
```

CPU Generated Packets Egress Queue 2

- 1080 packets will egress on Q4, threshold 1
- Remaining pkts dropped

© 2011 Cisco and/or its affiliates. All rights reserved. Cisco Public

QoS Troubleshooting - Port-ASIC

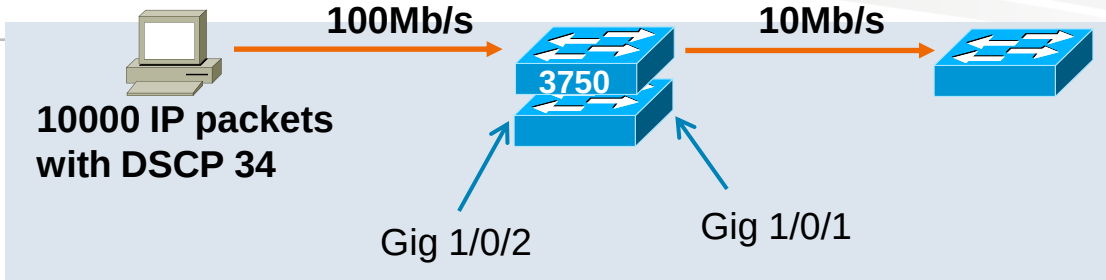

Viewing Egress Congestion (another way) with port-asic command

```
Switch# show platform port-asic stats drop gigabitEthernet 1/0/1

  Interface Gi1/0/1 TxQueue Drop Statistics
    Queue 0
      Weight 0 Frames 0
      Weight 1 Frames 0
      Weight 2 Frames 0
    Queue 1
      Weight 0 Frames 0
      Weight 1 Frames 0
      Weight 2 Frames 0
    Queue 2
      Weight 0 Frames 0
      Weight 1 Frames 0
      Weight 2 Frames 0
    Queue 3
      Weight 0 Frames 8920
      Weight 1 Frames 0
      Weight 2 Frames 0
```

- 10000 packets were received, 8920 were dropped on egress

Command works on all Catalyst IOS versions

© 2011 Cisco and/or its affiliates. All rights reserved.

QoS Troubleshooting - Buffer Tuning

Tuning Buffers and Thresholds to fix Congestion

- Queue-sets define the buffer allocation
- Default values can be modified
- 2 Queue-sets are available
- Reserved - how many buffers will be reserved for this port

  Default Queue-set values listed below

```
Switch# show mls qos int gi1/0/1 buffers
GigabitEthernet1/0/1
The port is mapped to qset : 1
The allocations between the queues are : 25 25 25 25

Switch# show mls qos queue-set

Queueset: 1
Queue     :        1        2        3        4
----------------------------------------------
buffers   :       25       25       25       25
threshold1:      200      200      100      100
threshold2:      200      200      100      100
reserved  :       50       50       50       50
maximum   :      400      400      400      400
```

Identifies Queue-set assigned to interface

Dropped on this Queue and Threshold

© 2011 Cisco and/or its affiliates. All rights reserved.

QoS Troubleshooting - Buffer Tuning (2)

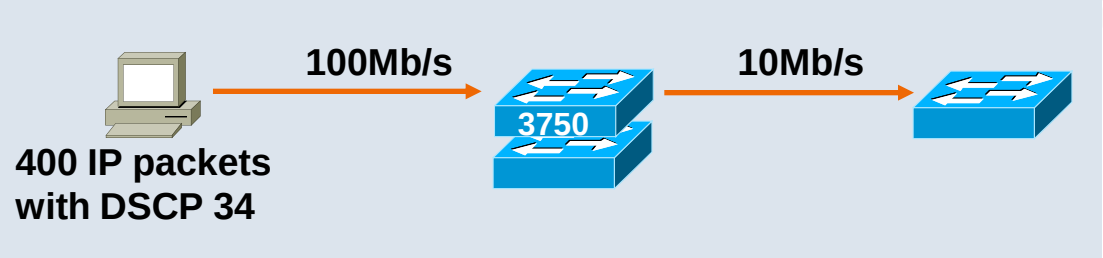


```
Switch# show platform port-asic stats drop gigabitEthernet 1/0/1

  Interface Gi1/0/1 TxQueue Drop Statistics
Queue 3
      Weight 0 Frames 8920
```

Packet drops with current Queue-set configuration

```
Switch(config)# mls qos queue-set output 1 threshold 4 300 300 50 400

Switch# show mls qos queue-set
Queueset: 1
Queue     :       1       2       3       4
----------------------------------------------
buffers   :      25      25      25      25
threshold1:     100     100     100     300
threshold2:     100     100     100     300
reserved  :      50      50      50      50
maximum   :     400     400     400     400
```

Threshold increased to 300

```
Switch# show platform port-asic stats drop gigabitEthernet 1/0/1

  Interface Gi1/0/1 TxQueue Drop Statistics
Queue 3
      Weight 0 Frames 8920
```

No additional Packet drops after Queue-set change

© 2011 Cisco and/or its affiliates. All rights reserved. Cisco Public

What is an Egress Queue-set

- 4 Egress Queues per port
- 3 drop thresholds per Queue
- Each port has a queue-set defined
- Threshold values over 100% dip into common pool (MAX).
- Threshold defines drop precedence for a class of traffic
- Queue-set does <u>not</u> define bandwidth

All values in Percentages of 100

```
Switch#show mls qos queue-set 1
Queueset: 1
Queue      :        1        2        3        4
----------------------------------------------
buffers    :       10       10       26       54
threshold1:        33       33       33       33
threshold2:        66       66       77       50
reserved   :       92       92      100       67
maximum    :      138      400      400      400
```

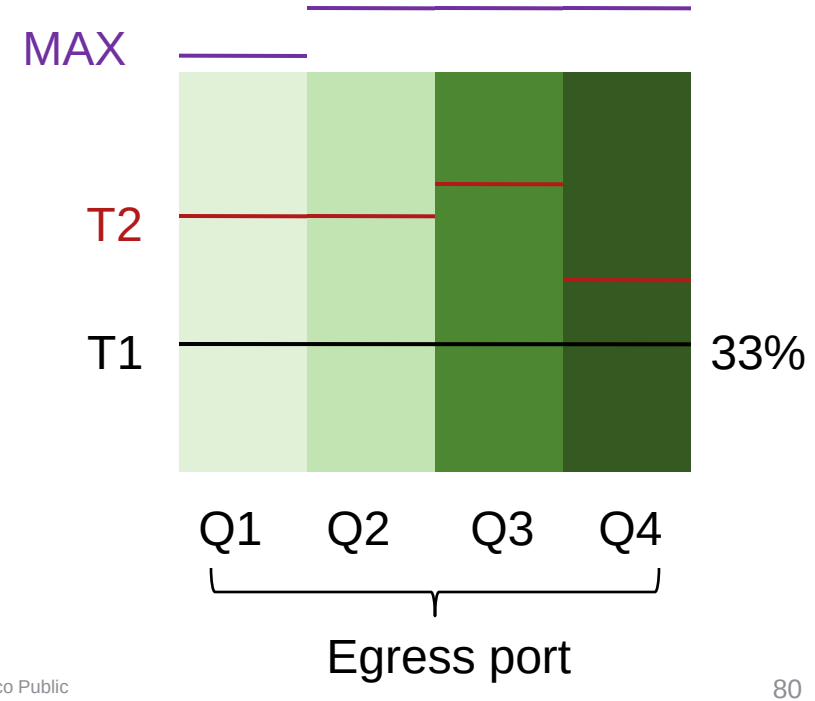

© 2011 Cisco and/or its affiliates. All rights reserved.
Cisco Public

Mapping Classes to Egress Queues

- Using “maps”, traffic classes mapped to Queue and threshold
- Maps available for DSCP and COS.
- 64 DSCP values shown.
- Each DSCP value maps to an egress Queue, and threshold
- Queues range: 1-4, Threshold range:01-03

```
Switch#show mls qos maps dscp-output-q
   Dscp-outputq-threshold map:
     d1 :d2    0     1     2     3     4     5     6     7     8     9
     ------------------------------------------------------------
      0 :    04-03 04-03 04-03 04-03 04-03 04-03 04-03 04-03 04-01 04-02
      1 :    04-02 04-02 04-02 04-02 04-02 04-02 03-03 03-03 03-03 03-03
      2 :    03-03 03-03 03-03 03-03 02-03 02-03 02-03 02-03 02-03 02-03
      3 :    02-03 02-03 03-03 03-03 03-03 03-03 03-03 03-03 03-03 03-03
      4 :    01-03 01-03 01-03 01-03 01-03 01-03 01-03 01-03 02-03 02-03
      5 :    02-03 02-03 02-03 02-03 02-03 02-03 02-03 02-03 02-03 02-03
      6 :    02-03 02-03 02-03 02-03
```

DSCP:0
Queue 4:
Threshold 3

DSCP:46
Queue 1
Threshold 3

DSCP:63
Queue 2
Threshold 3

© 2011 Cisco and/or its affiliates. All rights reserved.

Egress QoS Summary

- Packet drops don't always indicate a problem
  - For ex, Gigabit servers can easily oversubscribe 100M clients
  - Most protocols react well to drop and will slow down so maximum performance can be achieved
- Analyze traffic patterns
- Tune buffers as needed – increasing thresholds has minimal side effects
- Take advantage of both queue-sets
  - Eg: use Queue-set 1 on downlinks, Queue-set 2 on uplinks
- Map queues to distribute traffic according to the Plan
- Set thresholds to optimize high priority traffic
- Auto QOS
  - QOS is not easy, but Auto QOS makes it easy
  - Auto QOS produces consistent configurations across all 2K and 3K switch models

© 2011 Cisco and/or its affiliates. All rights reserved. Cisco Public

Troubleshooting QoS Issues

Command Summary

Troubleshooting Steps	Commands
Check for Errors/drops	Ingress and Egress ports show mls qos interface <> stats
Check Queue mapping	show mls qos maps dscp-output-q
Check Egress Queue details	show platform port-asic stats drop <>
Check and tune buffers	show mls qos queue-set Show mls qos maps dscp-output-q mls qos queue-set output <> threshold

© 2011 Cisco and/or its affiliates. All rights reserved.

Agenda

- Product Overview
- Troubleshooting
  - CPU
  - Memory
  - Local Link Issues
  - Layer 2 Forwarding
  - Layer 3 IP Unicast
  - Quality of Service
  - TCAM resource
  - Stacking (StackWise and StackWise Plus)
  - General Switch Health
- Summary

3750-X

3750-E

3750

3560-X

3560-E

3560

2960-S

Compact

2960

© 2011 Cisco and/or its affiliates. All rights reserved.

Cisco Public

Switch Hardware Components: TCAM the forwarding controller

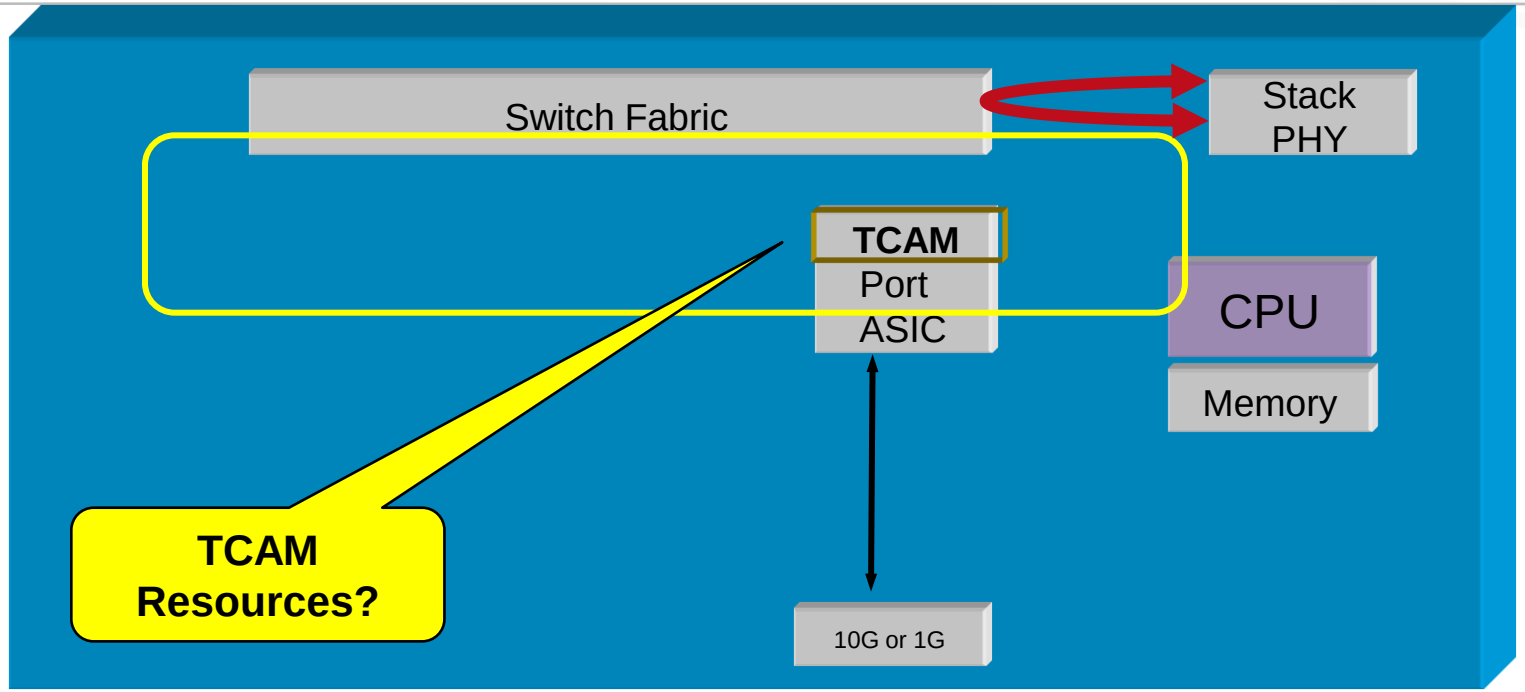

- The TCAM stores Forwarding database
  - IPv4, IPv6 and MAC addresses
- ACLs
  - service policies and security
- Multicast Addresses and Groups

© 2011 Cisco and/or its affiliates. All rights reserved.

TCAM Utilization

- TCAM space is limited
- Problem when Used Masks/Values = MAX

  Change SDM Template

```
Switch# show platform tcam utilization
CAM Utilization for ASIC# 0                    Max              Used
                                           Masks/Values     Masks/values
 Unicast mac addresses:                      784/6272          14/40
 IPv4 IGMP groups + multicast routes:        144/1152           7/27
 IPv4 unicast directly-connected routes:     784/6272          14/40
 IPv4 unicast indirectly-connected routes:   272/2176          11/55
 IPv4 policy based routing aces:               0/0              0/0
 IPv4 qos aces:                              768/768         260/260
 IPv4 security aces:                       1024/1024         723/723

Note: Allocation of TCAM entries per feature uses
a complex algorithm. The above information is meant
to provide an abstract view of the current TCAM utilization
```

Service Policies

Security ACLs Permit/deny

© 2011 Cisco and/or its affiliates. All rights reserved. Cisco Public

TCAM Overload

- An error message will get generated
- Traffic forwarding will be done (partly) in Software
- CPU utilization will go up – packets punted to CPU for processing

Syslog:

```
%ACLMGR-4-UNLOADING: Unloading ACL input label 1 VLAN interfaces 101 IPv4/Mac feature
%ACLMGR-4-ACLTCAMFULL: ACL TCAM Full. Software Forwarding packets on Input label 1 on
     L3 L2
```

```
Switch# sh platform acl oacltcamfull
      Vlan        oacl_tcam_full_bitmap            notify_apps
       101                 0x   0                     NOT-FULL
      Vlan     ipv6_oacl_tcam_full_bitmap          notify_apps
```

Means ACL Not Fully Programmed in TCAM

```
Switch# sh platform acl label 1 detail
IPv4/MAC ACL label
------------------
Unloaded due to lack of space:
```


© 2011 Cisco and/or its affiliates. All rights reserved.

TCAM: Switch Database Manager (SDM)

- SDM defines how TCAM resources are allocated
- Changing SDM template requires reboot
- All stack members must use same SDM template

```
Switch# show sdm prefer default
 "desktop default" template:
 The selected template optimizes the resources in
 the switch to support this level of features for
 8 routed interfaces and 1024 VLANs.

  number of unicast mac addresses:                  6K
  number of IPv4 IGMP groups + multicast routes:    1K
  number of IPv4 unicast routes:                    8K
    number of directly-connected IPv4 hosts:        6K
    number of indirect IPv4 routes:                 2K
  number of IPv4 policy based routing aces:         0
  number of IPv4/MAC qos aces:                      0.5K
  number of IPv4/MAC security aces:                 1K
```


© 2011 Cisco and/or its affiliates. All rights reserved.

TCAM: Switch Database Manager (SDM)

Template types

- List of available SDM Types

```
Switch# show sdm prefer ?
  access                Access bias
  default               Default bias
  dual-ipv4-and-ipv6    Support both IPv4 and IPv6
  ipe                   IPe bias
  routing               Unicast bias
  vlan                  VLAN bias

Switch# show sdm prefer dual-ipv4-and-ipv6 ?
  default  Default bias
  routing  Unicast bias
  vlan     VLAN bias
```

See Chapter “Configuring SDM Templates” in the Catalyst Switch Configuration Guide for more information

© 2011 Cisco and/or its affiliates. All rights reserved.

TCAM: Switch Database Manager (SDM)

Strategies to choose SDM

SDM Template	Use Case
access	L2 & L3, fewer L2 & L3 addresses than ‘default’, Supports Policy Based Routing, more security ACEs
default	L2 & L3, more L2 & L3 addresses than ‘access’
ipe	(not used)
routing	L2 & L3, weighted towards L3 space, Supports Policy Based Routing
vlan	L2 only, 12K MAC Addresses
dual-ipv4-and-ipv6	Required for IPv6 functionality
default, routing, vlan	same distribution as above, but with IPv6 resources

© 2011 Cisco and/or its affiliates. All rights reserved.

TCAM: SDM Templates 3750 – IPv4 only

TCAM Resources are dynamic based on choosen SDM Template

Resource	Access	Default	Routing	VLAN
Unicast MAC addresses	4 K	6 K	3 K	12 K
IGMP groups and multicast routes	1 K	1 K	1 K	1 K
Unicast routes	6 K	8 K	11 K	0
• Directly connected hosts	4 K	6 K	3 K	0
• Indirect routes	2 K	2 K	8 K	0
Policy-based routing ACEs	0.5 K	0	0.5 K	0
QoS classification ACEs	0.5 K	0.5 K	0.5 K	0.5 K
Security ACEs	2 K	1 K	1 K	1 K
VLANs	1 K	1 K	1 K	1 K

© 2011 Cisco and/or its affiliates. All rights reserved.

TCAM Hardware Summary

- TCAM Partition based on SDM Template
- L2 and L3 overload of TCAM resource: punt to CPU
- Number of ACEs depend on
  - Switch Model
  - SDM Template – different Templates for Layer 3 capable switches
- If ACL does not fit in TCAM, will be processed in SW (CPU).
  - CPU processing is much slower than TCAM
- Switch reboot required when SDM template changed.

© 2011 Cisco and/or its affiliates. All rights reserved.

Troubleshooting TCAM/ACL

Command Summary

Troubleshooting Steps	Commands
Utilization	`show platform tcam utilization`
Check HW resource	`show platform acl oacltcamfull` `show platform acl label <> detail`
SDM Template	`show sdm prefer`

© 2011 Cisco and/or its affiliates. All rights reserved.

Agenda

- Product Overview
- Troubleshooting
  - CPU
  - Memory
  - Local Link Issues
  - Layer 2 Forwarding
  - Layer 3 IP Unicast
  - Quality of Service
  - TCAM resource
  - Stacking (StackWise and StackWise Plus)
  - General Switch Health
- Summary

3750-X

3750-E

3750

3560-X

3560-E

3560

2960-S

2960

Compact

© 2011 Cisco and/or its affiliates. All rights reserved.

Switch Hardware Components: Stacking

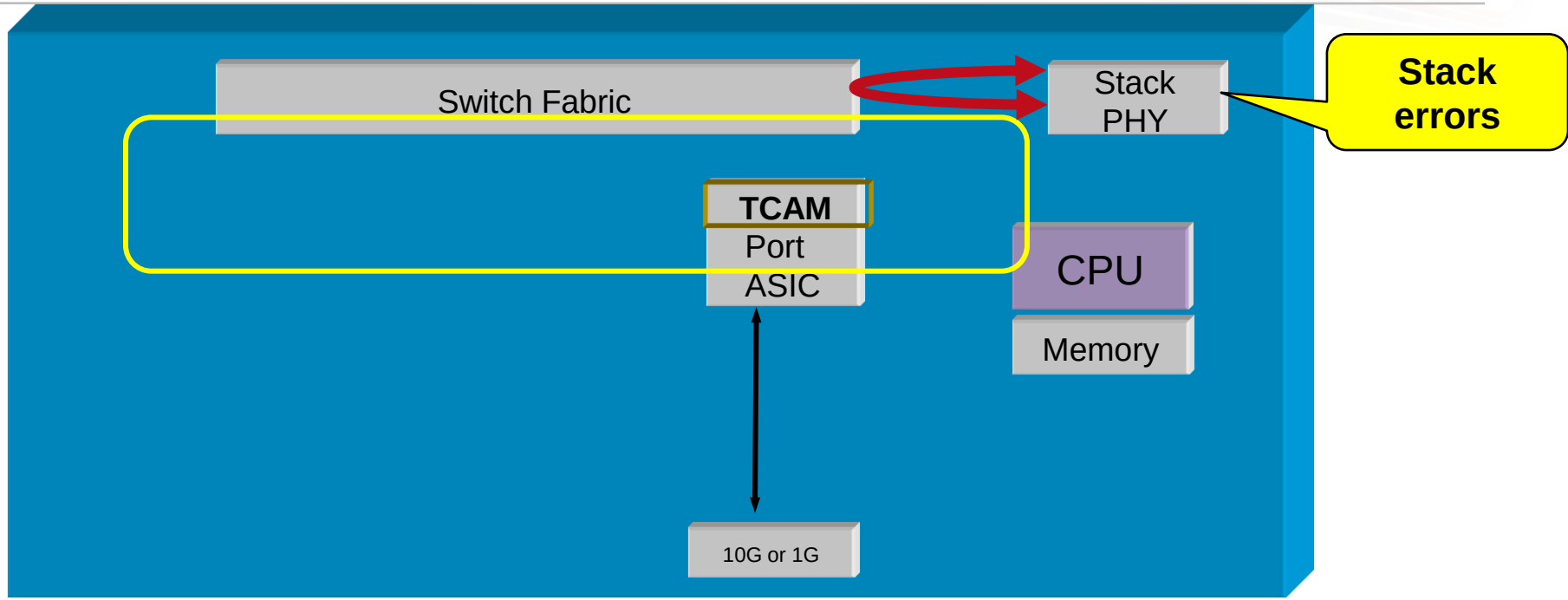

- Only 3750, 3750G, 3750-E, 3750-X support stacking with StackWise or StackWise Plus
  - C2960-S supports FlexStack
- Details in *Catalyst 3750 Switch Architecture* session.

© 2011 Cisco and/or its affiliates. All rights reserved.

Troubleshooting Stacks

- Conditions that can prevent a switch from joining a stack:
  - Incompatible IOS Versions between the stack members.
  - A defective Stackwise cable
    - **Not properly connected.**
  - Incomplete connection if only one Stackwise cable is connected.
  - SDM Template mismatch.

- The following example shows a switch that can not join the stack:

```
Stack# show switch
                                                H/W   Current
Switch#  Role    Mac Address     Priority Version  State
-----------------------------------------------------------
*1       Master 0018.ba60.de00     15      1       Ready
 2       Member 0018.ba60.ce00     14      1       Ready
 3       Member 0016.9d0c.7500     1       2       Version Mismatch
```


© 2011 Cisco and/or its affiliates. All rights reserved.

Troubleshooting Stacks Version Mismatch

- Software Version Mismatch

  IOS version should be either the same or compatible

  show version will show IOS version of all switches in a stack.

- Switches with different Major Version numbers are incompatible and cannot exist in the same switch stack.

  Occurs on switch member addition, or RMA replacement

```
3750E# show version

Switch Ports Model              SW Version            SW Image
------ ----- -----              ----------            ----------
*     1 30    WS-C3750E-24TD     12.2(50)SE          C3750E-UNIVERSAL-M
      3 30    WS-C3750E-24PD     12.2(50)SE          C3750E-UNIVERSAL-M

3750E# show platform stack manager all
Switch/Stack Mac Address : 001b.545f.2800
Mac persistency wait time: 4 mins
                                                H/W    Current
Switch#  Role   Mac Address     Priority Version  State
-------------------------------------------------------------
*1       Master 001b.545f.2800     12      1       Ready
 3       Member 001d.46be.7500     8       1       Ready
```

IOS Versions should match

Major versions must match

© 2011 Cisco and/or its affiliates. All rights reserved.

Troubleshooting Stacks, Stack Cables

- A Switch can join a stack with only one Stackwise interface connected to another active “stack member”.
- important precautions for connecting Stackwise cables
  - Retainer screws on the connector should not be loose
  - Retainer screws on the connector should **not be too tight**
  - Retainer screws should be tightened “**finger tight**” and no more

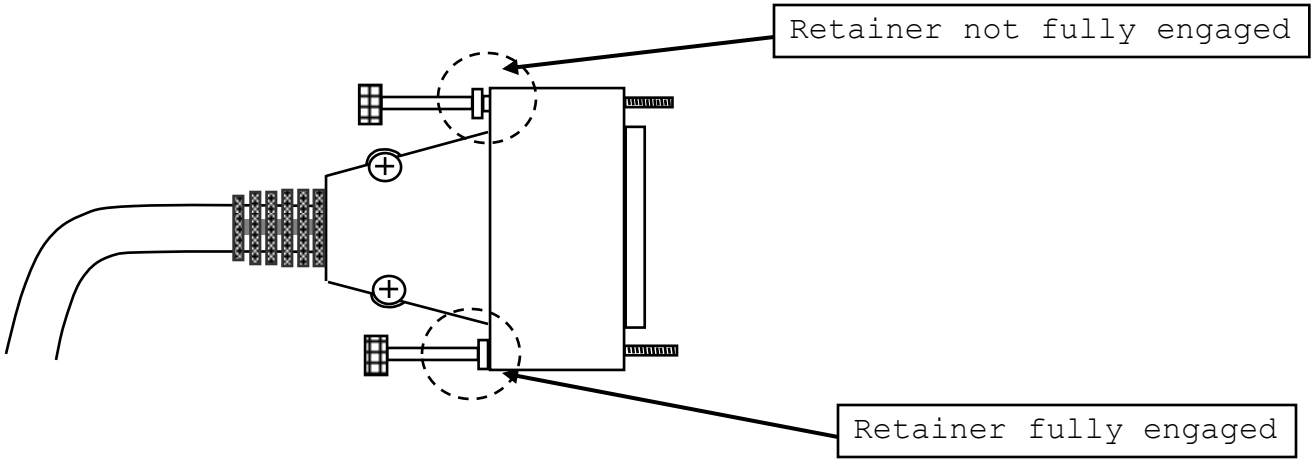

© 2011 Cisco and/or its affiliates. All rights reserved.

Troubleshooting: Stack Commands

Commands to give stack details

```
3750# show switch detail
                                                    Current
Switch#  Role       Mac Address     Priority        State
-------------------------------------------------------
 1       Slave      000c.30ae.4f00     9            Ready
*2       Master     000d.bd5c.1680     15           Ready

         Stack Port Status              Neighbors
Switch#  Port 1     Port 2            Port 1   Port 2
-------------------------------------------------------
  1        Ok         Ok                 2        2
  2        Ok         Ok                 1        1
```

```
3750# show switch stack-ring activity
Switch   Frames sent to stack ring (approximate)
-----------------------------------------------
1              5781
2              4928
Total frames sent to stack ring : 10709
Note: these counts do not include frames sent to the ring
by certain output features such as output SPAN and output
ACLs.
```

```
3750E# show switch stack-ring speed

Stack Ring Speed        : 32G
Stack Ring Configuration: Full
Stack Ring Protocol     : StackWisePlus
```

- **Use the mode button on the switch to determine its stack switch number**
- **LED on the port with the corresponding switch number will illuminate**
- **For ex, if the switch is # 4 in the stack, port 4's LED will light up**

© 2011 Cisco and/or its affiliates. All rights reserved. Cisco Public

Troubleshooting: Stack Commands Contd.

Check Stack Utilization

```
3750# show controllers utilization

Port        Receive Utilization  Transmit Utilization
Gi1/0/1             1                     1
.
.
Gi1/0/48            1                     2
Gi1/0/49            2                     2
Gi1/0/50            2                     2
Gi1/0/51            2                     1
Gi1/0/52            0                     0

Total Ports : 52
Switch Receive Bandwidth Percentage Utilization  : 12
Switch Transmit Bandwidth Percentage Utilization : 12

Stack Ring Percentage Utilization : 12
```


© 2011 Cisco and/or its affiliates. All rights reserved.

Troubleshooting: Stack Commands

Details on the stack ports, members 1 and 3 active

```
3750# show switch
Switch/Stack Mac Address : 001b.545f.2800
Mac persistency wait time: 4 mins
                                                H/W   Current
Switch#  Role   Mac Address     Priority Version  State
-----------------------------------------------------------
*1       Master 001b.545f.2800     12     1       Ready
 2       Member 0000.0000.0000     0      1       Provisioned
 3       Member 001d.46be.7500     8      1       Ready
 4       Member 0000.0000.0000     0      1       Provisioned
 5       Member 0000.0000.0000     0      1       Provisioned

3750# show switch stack-ports summary

Switch#/  Stack   Neighbor   Cable    Link   Link   Sync      #         In
 Port#     Port              Length    OK   Active   OK    Changes   Loopback
          Status                                          To LinkOK
--------  ------  --------  --------  ----  ------  ----  ---------  --------
  1/1     OK         3      50 cm     Yes    Yes    Yes        1        No
  1/2     Down      None    50 cm     No     No     No         0        No
  3/1     Down      None    50 cm     No     No     No         0        No
  3/2     OK         1      50 cm     Yes    Yes    Yes        1        No
```


© 2011 Cisco and/or its affiliates. All rights reserved. Cisco Public

Troubleshooting Stacking

Command Summary

Troubleshooting Steps	Commands

Stack status	`show switch [detail]`
	`show platform stack manager`
	`show switch stack-ring <>`
	`show controllers utilization`
	`show switch stack-ports summary (New)`

Test Stack Ports	`switch <> stack port <> enable/disable` `From IOS 12.2(50)`

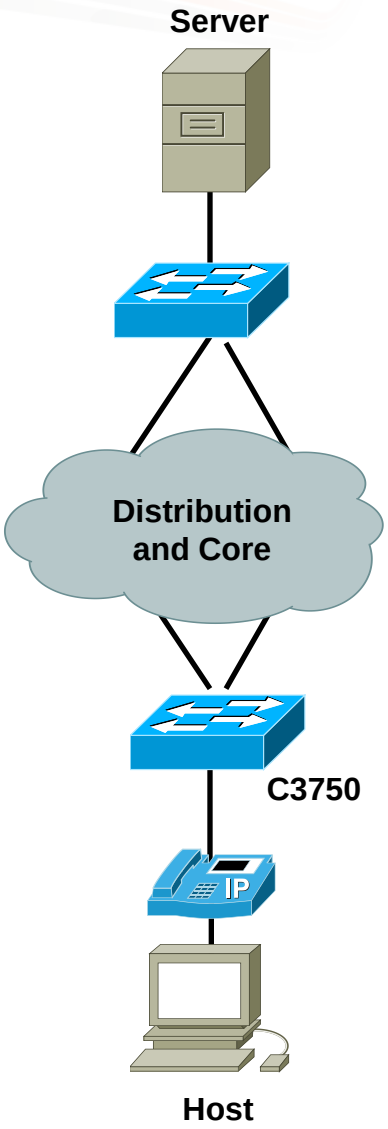

© 2011 Cisco and/or its affiliates. All rights reserved.

Agenda

- Product Overview
- Troubleshooting
  - CPU
  - Memory
  - Local Link Issues
  - Layer 2 Forwarding
  - Layer 3 IP Unicast
  - Quality of Service
  - TCAM resource
  - Stacking (StackWise and StackWise Plus)
  - General Switch Health
- Summary

3750-X

3750-E

3750

3560-X

3560-E

3560

2960-S

Compact

2960

© 2011 Cisco and/or its affiliates. All rights reserved.

GOLD (Generic Online Diagnostics) 3750E/3750 and 3560E/3560

Boot-Up diagnostics

show diagnostic post

Run During System Bootup,
Makes sure faulty hardware is taken out of service (POST = Power On Self Test)

Runtime diagnostics

Health-Monitoring

(config) # [no] diagnostic monitor interval { switch <1-9> } test { test-id | test-id-range | all } hh:mm:ss { ms <0-999> } { days <0-20> }

To run Non-disruptive tests in the background
Serves as HA trigger

On-Demand

diagnostic start {switch <1:9>} test {test-num | test range | all | basic | non-disruptive }

All diagnostics tests can be run on demand, for troubleshooting purposes. It can also be used as a pre-deployment tool.

Scheduled

Switch(config) #[no] diagnostic schedule { switch <1-9> } test { test-id | test-id-range | all } daily {hh:mm}

All diagnostic tests can be Scheduled, for verification and troubleshooting purposes

© 2011 Cisco and/or its affiliates. All rights reserved.

GOLD: Test Options
OnDemand

What Tests Can I Run?

```
3750E# show diagnostic content switch 1

                                                          Test Interval
 ID   Test Name                          Attributes       day hh:mm:ss.ms     Threshold
 ==== ====================== ============  ========== ====   ========
1) TestPortASICStackPortLoopback ---> B*N****I**      005 01:10:25.05      n/a
2) TestPortASICLoopback ----------------> B*D*X**IR*   not configured       n/a
3) TestPortASICCam ----------------------> B*D*X**IR*  not configured       n/a
4) TestPortASICRingLoopback ----------> B*D*X**IR*     not configured       n/a
5) TestMicRingLoopback ----------------> B*D*X**IR*    not configured       n/a
6) TestPortASICMem ----------------------> B*D*X**IR*  not configured       n/a
7) TestInlinePwrCtlr ----------------------> B*D*X**IR* not configured      n/a
```

Diagnostics test suite attributes:

B/* - Basic ondemand test / NA

P/V/* - Per port test / Per device test / NA

D/N/* - Disruptive test / Non-disruptive test / NA

S/* - Only applicable to standby unit / NA

X/* - Not a health monitoring test / NA

F/* - Fixed monitoring interval test / NA

E/* - Always enabled monitoring test / NA

A/I - Monitoring is active / Monitoring is inactive

R/* - Switch will reload after test list completion / NA

P/* - will partition stack / NA

© 2011 Cisco and/or its affiliates. All rights reserved.

GOLD: CLI
OnDemand

diagnostic start {switch <1:9>} test {test-num | test range | all | basic | non-disruptive }

3750E# **diagnostic start switch 1 test 1**

00:24:33: %DIAG-6-TEST_RUNNING: Switch 1: Running TestPortASICStackPortLoopback{ID=1}

00:24:34: %DIAG-6-TEST_OK: Switch 1: TestPortASICStackPortLoopback{ID=1} has completed successfully

Disruptive Test:
Users will be prompted if the test causes a lose of stack connectivity:
Switch 3: Running test(s) 2 **will cause the switch under test to reload** after completion of the test list.
Switch 3: Running test(s) 2 may disrupt normal system operation **Do you want to continue? [no]:**

Disruptive Test:
Users will be prompted if the test causes stack partitioning:
Switch 6: Running test(s) 2 will cause the switch under test to reload after completion of the test list.
Switch 6: Running test(s) 2 **will partition stack**
Switch 6: Running test(s) 2 may disrupt normal system operation **Do you want to continue? [no]:**

Note: Tests Run to Completion (No Stop Command)

© 2011 Cisco and/or its affiliates. All rights reserved.

GOLD: Results
OnDemand

3750E# show diagnostic status → **shows what diagnostics are currently running**

3750E# show diagnostic result switch 1 detail

```
Switch 1:   SerialNo : CAT1033R1FS

Overall diagnostic result: PASS
 Test results: (. = Pass, F = Fail, U = Untested)
   1) TestPortASICStackPortLoopback ---> .
        Error code ----------------------> 0 (DIAG_SUCCESS)
        Total run count ----------------> 21
        Last test execution time ----> Mar 13 2009 11:35:00
        First test failure time ---------> n/a
        Last test failure time ---------> n/a
        Last test pass time -----------> Mar 13 2009 11:35:00
        Total failure count -------------> 0
        Consecutive failure count ---> 0
```


© 2011 Cisco and/or its affiliates. All rights reserved.

Agenda

- Product Overview
- Troubleshooting
  - CPU
  - Memory
  - Local Link Issues
  - Layer 2 Forwarding
  - Layer 3 IP Unicast
  - Quality of Service
  - TCAM resource
  - Stacking (StackWise and StackWise Plus)
  - General Switch Health
- Summary

3750-X

3750-E

3750

3560-X

3560-E

3560

2960-S

Compact

2960

© 2011 Cisco and/or its affiliates. All rights reserved.

Cat 2K-3K Troubleshooting Summary

- Check the logs
  - Error messages?
  - Warnings?
- Check overall health
  - Is the HW OK?
  - Is the CPU normal?
  - ‘show post’ – to view results of last self check on bootup
- Check the configuration
- Follow the packet
  - Use the architecture to understand the flow
  - Narrow down possibilities
- Check the documentation and online guides
- Contact TAC

© 2011 Cisco and/or its affiliates. All rights reserved. Cisco Public

Tools and Tricks

- Enable NTP to troubleshoot across switches

```
ntp server <ip>
```

- Include date and time for debug and log messages

```
service timestamps log [datetime|uptime]
 localtime msec show-timezone
service timestamps debug [datetime|uptime]
 localtime msec show-timezone
```

- Include comments on the console as reminders

```
C3750#!!! Comments here
```

- Execute ‘show’ command from ‘config term’ mode

```
C3750(config)# do show running int Gi1/0/1
```

- Session to another switch member

```
C3750#session <member #>
or
C3750#remote command <1-9|all> “IOS command”
```


© 2011 Cisco and/or its affiliates. All rights reserved. Cisco Public

Tools and Tricks

Making Life Easier…

- Review open caveats sections in release notes
- Search Bug Toolkit for known issues
- Reference Output Interpreter to decode command output
- Reference System Message Guide for mitigation recommendations

© 2011 Cisco and/or its affiliates. All rights reserved.

References

- Troubleshooting Catalyst 3750:

http://www.cisco.com/en/US/products/hw/switches/ps5023/prod_troubleshooting_guides_list.html

- Online Resources on http://www.cisco.com:

  Troubleshooting High CPU Utilization

  Troubleshooting Power over Ethernet (PoE)

  Troubleshooting Switch Stacks

  Cisco Catalyst 3750 QoS Configuration Examples (Doc 91862)

  Auto Negotiation issues: (Document 17053)

Want to learn more? Check out *CCNP Practical Studies: Troubleshooting* by Donna Harrington.

© 2011 Cisco and/or its affiliates. All rights reserved.

Recommended Sessions:

- BRKCRS-3142 Troubleshooting Catalyst 4500 Switches
- BRKCRS-3143 Troubleshooting Catalyst 6500 Switches
- BRKARC-3437 Catalyst 3750 Switch Architecture
- BRKRST-2500 Campus QOS Design

© 2011 Cisco and/or its affiliates. All rights reserved.

Recommended Reading

- Continue your Cisco Live learning experience with further reading from Cisco Press
- Check the Recommended Reading flyer for suggested books

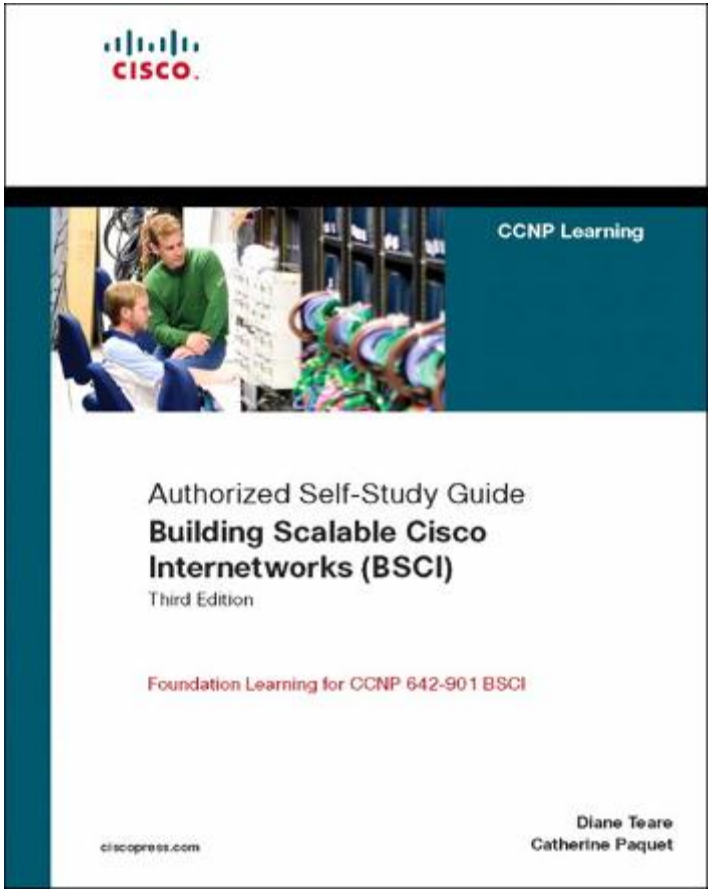

Available Onsite at the Cisco Company Store

© 2011 Cisco and/or its affiliates. All rights reserved.

Learn. Connect. Collaborate. together.

Visit the Cisco Store for Related Titles

http://theciscostores.com

© 2011 Cisco and/or its affiliates. All rights reserved. Cisco Public

Complete Your Online Session Evaluation

- Receive 25 Cisco Preferred Access points for each session evaluation you complete.
- Give us your feedback and you could win fabulous prizes. Points are calculated on a daily basis. Winners will be notified by email after July 22nd.
- Complete your session evaluation online now (open a browser through our wireless network to access our portal) or visit one of the Internet stations throughout the Convention Center.
- Don’t forget to activate your Cisco Live and Networkers Virtual account for access to all session materials, communities, and on-demand and live activities throughout the year. Activate your account at any internet station or visit www.ciscolivevirtual.com.

© 2011 Cisco and/or its affiliates. All rights reserved.

Thank you.

© 2011 Cisco and/or its affiliates. All rights reserved.

Learn. Connect. Collaborate. *together*.

Backup and Appendix

© 2011 Cisco and/or its affiliates. All rights reserved. Cisco Public

QoS TroubleShooting: Classification Strategy

Reference the tim Z. session
Don't worry if this doesn't make sense

Application	DSCP	CoS
Network Control	–	CoS 7
Internetwork Control	CS6	CoS 6
Voice	EF	CoS 5
Interactive Video	AF41	CoS 4
Streaming Video	CS4	CoS 4
Mission-Critical Data	AF31	CoS 3
Call Signaling	CS3	CoS 3
Transactional Data	AF21	CoS 2
Network Management	CS2	CoS 2
Bulk Data	AF11	CoS 1
Scavenger	CS1	CoS 1
Best Effort	0	0

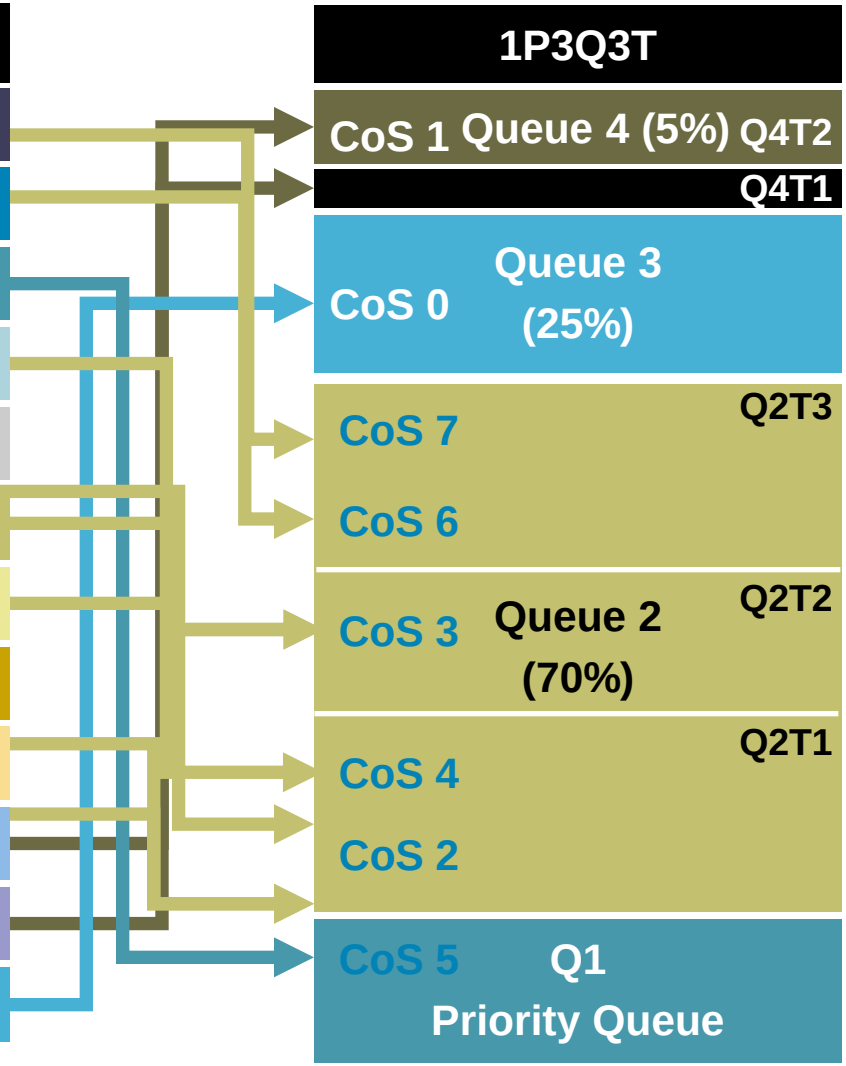

© 2011 Cisco and/or its affiliates. All rights reserved.

Port Access-List

```
Switch# sh run | inc access-list
access-list 123 permit ip host 10.100.1.2 any
Switch# sh run int gi 1/0/2
Building configuration...

Current configuration : 134 bytes
!
interface GigabitEthernet1/0/2
 switchport access vlan 101
 ip access-group 123 in
 mls qos trust dscp
 spanning-tree portfast
end
```


© 2011 Cisco and/or its affiliates. All rights reserved.

Port Access-List Details

```
Switch# sh platform acl interface gigabitEthernet 1/0/2 portlabels detail
Port based ACL: (asic 1)
----------------------------
  Input Label:  4    Op Select Index: 255
    Interface(s): Gi1/0/2
    Access Group: 123, 3 VMRs
    Mask:   00000000 FFFFFFFF 00000000 00000000 00000000
    Value:  00000000 0A640102 00000000 00000000 00000000
            Result: 0x09 ←--- Permit IP Source address
    Mask:   00000000 00000000 00000000 00000000 00000000
    Value:  00000000 00000000 00000000 00000000 00000000
            Result: 0x00  ←--- Deny Mask & Value all 0 = any any
    Mask:   00000000 00000000 00000000 00000000 00000000
    Value:  00000000 00000000 00000000 00000000 00000000
            Result: 0x09
    IP Source Guard: 0 VMRs
    LPIP: 0 VMRs
    MAC Access Group: (none), 0 VMRs
```

```
access-list 123 permit ip host 10.100.1.2 any
```


© 2011 Cisco and/or its affiliates. All rights reserved.

Router Access-List

```
Configuration :
!
interface Vlan101
 ip address 10.101.1.1 255.255.255.0
 ip access-group 123 in
!
access-list 123 permit ip host 10.100.1.2 any

Switch# sh platform acl interface vlan 101
Input Label: 1
Output Label: 0 (default)
Input IPv6 Label: 1
Output IPv6 Label: 0 (default)
```


© 2011 Cisco and/or its affiliates. All rights reserved.

Router Access-List Details

```
Switch# sh platform acl label 1 detail
IPv4/MAC ACL label
------------------
Input Op Select Index 255:
Output Op Select Index 255:
Input Features:
  Interfaces or VLANs:  Vl101
  Vlan Map: (none)
  Access Group: 123, 5 VMRs.
    Mask:   00000000 FFFFFFFF 00000000 00000000 00000000
    Value:  00000000 0A640102 00000000 00000000 00000000
            Result: 0x09
    Mask:   00000000 00000000 05000000 00000000 00000000
    <output removed>
```

10.100.1.2

© 2011 Cisco and/or its affiliates. All rights reserved.

Vlan Access-List

```
vlan access-map FilterMap 10
 action drop
 match ip address 123
!
vlan filter FilterMap vlan-list 101
access-list 123 permit ip host 10.100.1.2 any

Switch# sh vlan filter
VLAN Map FilterMap is filtering VLANs:
  101
Switch# show platform acl vlan 101
Input Label: 1
Output Label: 1
Input IPv6 Label: 1
Output IPv6 Label: 1
```


© 2011 Cisco and/or its affiliates. All rights reserved.

Vlan Access-List Details

```
Switch# sh platform acl label 1 detail
IPv4/MAC ACL label
------------------
Input Op Select Index 255:
Output Op Select Index 255:
Input Features:
  Interfaces or VLANs:  Vl101
  Vlan Map: FilterMap
    IP Access-lists:
      123, Action 0x00, Seq 10, 2 VMRs.
    Mask:   00000000 FFFFFFFF 00000000 00000000 00000000
    Value:  00000000 0A640102 00000000 00000000 00000000
            Result: 0x09
    Mask:   00000000 00000000 00000000 00000000 00000000
    Value:  00000000 00000000 00000000 00000000 00000000
            Result: 0x00
```


© 2011 Cisco and/or its affiliates. All rights reserved.

Supported ACL TCAM Entry types

	Commonly Known As…	Configured On…	Controls…	Direction
MAC ACL	MACL	L2 port	Non-IP packets	In-bound
Port ACL	PACL	L2 Port	IP packets Non-IP packets using MACL	In-bound
Router ACL	RACL	L3 port L3 EtherChannel port Switched Virtual Interface (SVI)	Routed IP traffic	In-bound Out-bound
VLAN ACL	VACL	VLAN	IP packets routed into or out of a VLAN IP packets bridged within a VLAN	Directionless

© 2011 Cisco and/or its affiliates. All rights reserved.

L2 Multicast Trouble shooting
IGMP Snooping Troubleshooting

- Verify the multicast router port is learned
- Verify that the join from the clients are received by the switch
- Verify that multicast traffic gets forwarded as per the IGMP table

© 2011 Cisco and/or its affiliates. All rights reserved.

IGMP Multicast Router Port

- Gets learned dynamically by listening either to PIM/DVMRP or to CGMP packets
- Mrouter port should be learned dynamically

```
3750# show ip igmp snooping mrouter vlan 100
Vlan    ports
----    -----
 100    Gi1/0/1(dynamic)
# debug ip igmp snooping mrouter
   *Mar  1 03:33:44.075: IGMPSN: router: Received non igmp pak on Vlan 100, port Gi1/0/1
   *Mar  1 03:33:44.075: IGMPSN: router: PIMV2 Hello packet received in 100
   *Mar  1 03:33:44.075: IGMPSN: router: Is a router port on Vlan 100, port Gi1/0/1
   *Mar  1 03:33:44.075: IGMPSN: router: Learning port: Gi1/0/1 as rport on Vlan 100
# debug platform cpu-queue igmp-snooping
  *Mar  1 03:39:09.469: Pak recvd on IGMP-SNOOP-Q: Local Port Fwding L3If:Vlan100
   L2If:GigabitEthernet1/0/1 DI:0x12FC, LT:7, Vlan:100   SrcGPN:24, SrcGID:24,
   ACLLogIdx:0x0, MacDA:0100.5e00.0005, MacSA: 0011.21e6.5a40   IP_SA:10.160.16.1
   IP_DA:224.0.0.5 IP_Proto:89
   TPFFD:E841C018_00640064_00A0005E-000012FC_43330000_00000000
```

View pkts to CPU

© 2011 Cisco and/or its affiliates. All rights reserved.

IGMP Client Join

IGMP Joins Received Are Sent to the CPU to Be Processed

```
Switch# debug ip igmp snooping group 239.100.100.100
*Mar  6 04:19:39.175: IGMPSN: Received IGMPv2 Report for group 239.100.100.100 received on Vlan
     101, port Gi1/0/2
*Mar  6 04:19:39.175: IGMPSN: router: Is not a router port on Vlan 101, port Gi1/0/2
*Mar  6 04:19:39.175: IGMPSN: group: Skip client info adding - ip 10.101.1.100, port_id Gi1/0/2,
     on vlan 101
*Mar  6 04:19:39.175: IGMPSN: MCAST IP address 239.100.100.100, MAC address 0100.5e64.6464
*Mar  6 04:19:39.175: IGMPSN: Can not Locate gce 0100.5e64.6464, on Vlan 101
*Mar  6 04:19:39.175: IGMPSN: MCAST IP address 239.100.100.100, MAC address 0100.5e64.6464
*Mar  6 04:19:39.175: IGMPSN: Can not Locate gce 0100.5e64.6464, on Vlan 101
*Mar  6 04:19:39.175: IGMPSN: mgt: created gce 0100.5e64.6464, on Vlan 101
*Mar  6 04:19:39.175: l2mcm_group_create: creating a group 239.100.100.100 on vlan 101, dummy NO
*Mar  6 04:19:39.175: l2mcm_group_create: timer stop: vlan 101, group 239.100.100.100
*Mar  6 04:19:39.175: IGMPSN: mgt: created group 239.100.100.100, on Vlan 101
*Mar  6 04:19:39.175: IGMPSN: mgt: Vlan 101 gce 0100.5e64.6464 add port Gi1/0/2
*Mar  6 04:19:39.175: L2MM: setting Gi1/0/2 in gce->mbr_blist
```


© 2011 Cisco and/or its affiliates. All rights reserved.

IP Multicast Routing

- Verify PIM is working fine (*not covered in this session*)
- Verify client is correctly joined via IGMP
- Verify the switch is routing the flow correctly

```
Switch# show ip mroute 239.100.100.100 10.99.1.100
IP Multicast Routing Table
<output removed>
(10.99.1.100, 239.100.100.100), 11:32:59/00:02:56, flags: JT
  Incoming interface: Vlan100, RPF nbr 10.100.1.1
  Outgoing interface list:
    Vlan101, Forward/Sparse-Dense, 11:32:59/00:02:22
Switch# show ip igmp snooping groups vlan 101 239.100.100.100
Vlan      Group                Type        Version     Port List
-------------------------------------------------------------------
101       239.100.100.100      igmp        v2          Gi1/0/2
```


© 2011 Cisco and/or its affiliates. All rights reserved. Cisco Public

IP Multicast Routing - 2

- show forward can be used to verify if the ASICs are setup correctly to route the multicast flow

```
Switch# show platform forward <src intf> vlan <vid> <srcmac> <dstmac> ip
<srcip> <dstip> udp <src port> <dst port>
```

```
Switch# show platform forward Gig 1/0/1 vlan 100 18.ba88.1fc2 0100.5e64.6464 ip
    10.99.1.100 239.100.100.100 udp 0 0

Ingress:

Global Port Number: 1, lpn: 3 ASIC Number: 1

Source Vlan Id: Real 100, Mapped 9. L2EncapType 0, L3EncapType 0

<output removed>

Output Packets:

-----------------------------------------

GigabitEthernet1/0/2 Packet 1

 Lookup                    Key-Used                    Index-Hit    A-Data

OutptACL 50_EF646464_0A630164-00_41000000_0000A87E     01FFE   03000000

Port        Vlan       SrcMac           DstMac     Cos  Dscpv

Gi1/0/2     0101  000f.f7e8.e042  0100.5e64.6464
```


© 2011 Cisco and/or its affiliates. All rights reserved.

Troubleshooting Multicast

Command Summary

Troubleshooting Steps	Commands

IGMP	`sh ip igmp snooping mrouter vlan`
	`debug ip igmp snooping mrouter`
	`debug platform cpu-queue igmp-snooping`
	`debug ip igmp snooping group`

L3 Multicast	`sh ip mroute`
	`sh ip igmp snooping groups vlan`
	`show platform forward`

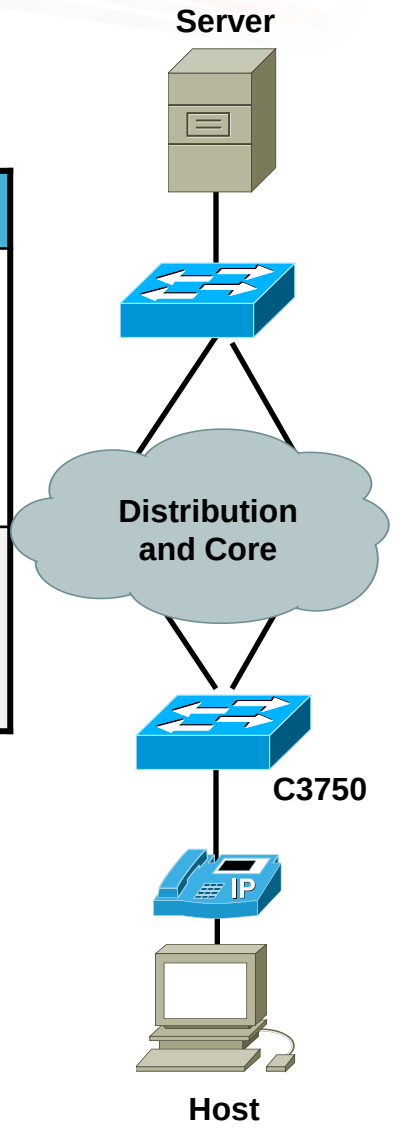

© 2011 Cisco and/or its affiliates. All rights reserved.

Appendix A
Error Counters Definition

- FCS-Err is the number of valid size frames with FCS (Frame Check Sequence) errors but no framing errors: this is typically a physical issue (cabling, bad port, NIC card,…) but can also indicate a duplex mismatch
- Align-Err is the number of frames with alignment errors (frames that do not end with an even number of octets and have a bad CRC) received on the port; these usually indicate a physical problem (cabling, bad port, NIC card,…) but can also indicate a duplex mismatch; when the cable is first connected to the port, some of these errors may occur; also, if there is a hub connected to the port then collisions between other devices on the hub may cause these errors
- Late-Coll (Late Collisions) is the number of times that a collision is detected on a particular port late in the transmission process; for a 10mbit/s port this is later than 512 bit-times into the transmission of a packet; five hundred and twelve bit-times corresponds to 51.2 microseconds on a 10 Mbit/s system; this error can indicate a duplex mismatch among other things; for the duplex mismatch scenario the late collision would be seen on the half duplex side; as the half duplex side is transmitting, the full duplex side does not wait its turn and transmits simultaneously causing a late collision; late collisions can also indicate an Ethernet cable/segment that is too long; collisions should not be seen on ports configured as full duplex
- Single-Coll (Single Collision) is the number of times one collision occurred before the port transmitted a frame to the media successfully; collisions are normal for port configured as half duplex but should not be seen on full duplex ports; if collisions are increasing dramatically this points to a highly utilized link or possibly a duplex mismatch with the attached device
- Multi-Coll (Multiple Collision) is the number of times multiple collisions occurred before the port transmitted a frame to the media successfully; collisions are normal for port configured as half duplex but should not be seen on full duplex ports; if collisions are increasing dramatically this points to a highly utilized link or possibly a duplex mismatch with the attached device

© 2011 Cisco and/or its affiliates. All rights reserved.

Appendix A
Error Counters Definition (2)

- Excess-Coll (Excessive Collisions) is a count of frames for which transmission on a particular port fails due to excessive collisions; an excessive collision happens when a packet has a collision 16 times in a row; the packet is then dropped; excessive collisions is typically an indication that the load on the segment needs to be split across multiple segments but can also point to a duplex mismatch with the attached device; collisions should not be seen on ports configured as full duplex
- Carri-Sen (Carrier Sense) occurs every time an Ethernet controller wants to send data on a half duplex connection; the controller senses the wire and check if it is not busy before transmitting; this is normal on an half-duplex Ethernet segment
- Undersize are frames received that are smaller than the minimum IEEE 802.3 frame size of 64bytes long (excluding framing bits, but including FCS octets) that were otherwise well formed; check the device sending out these frames
- Runts are frames received that are smaller than the minimum IEEE 802.3 frame size (64 bytes for Ethernet) and with a bad CRC; this can be caused by duplex mismatch and physical problems like a bad cable, port, or NIC card on the attached device
- Giants exceed the maximum IEEE 802.3 frame size (1518 bytes for non-jumbo Ethernet); try to find the offending device and remove it from the network
- http://www.cisco.com/warp/public/473/164.html#show_interface

© 2011 Cisco and/or its affiliates. All rights reserved.

Cisco live!

© 2011 Cisco and/or its affiliates. All rights reserved.