Wk11L2: Transfer functions

Giles Blaney, PhD

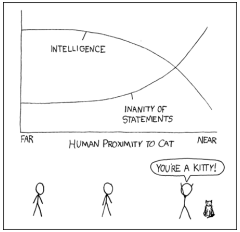

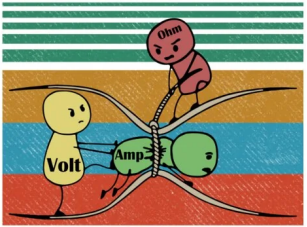

Tufts UNIVERSITY | School of Engineering

Wed. Nov. 12

Recap Wk11L1

Impedances

Table 7-4: Summary of v–i properties for R, L, and C.

Property	R	L	C
v–i	$v = Ri$	$v = L\dfrac{di}{dt}$	$i = C\dfrac{dv}{dt}$
V–I	$\mathbf{V} = R\mathbf{I}$	$\mathbf{V} = j\omega L\,\mathbf{I}$	$\mathbf{V} = \dfrac{\mathbf{I}}{j\omega C}$
Z	R	$j\omega L$	$\dfrac{1}{j\omega C}$
dc equivalent	R	Short circuit	Open circuit
High-frequency equivalent	R	Open circuit	Short circuit
Frequency response	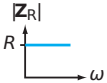		

Almost all analysis methods we learned for resistors are still valid for impedances (now with complex numbers):

- Series and parallel combinations
- Voltage dividers (connected to Wheatstone bridges)
- Kirchhoff's laws (node and mesh analysis)
- Thévenin equivalents
- Op-amps

Transfer Functions

$$\overrightarrow{H}(\omega) = \frac{\widetilde{V}_{out}(\omega)}{\widetilde{V}_{in}(\omega)} \tag{1}$$

RLC Circuit in Phasor Domain

RLC Circuit in Phasor Domain

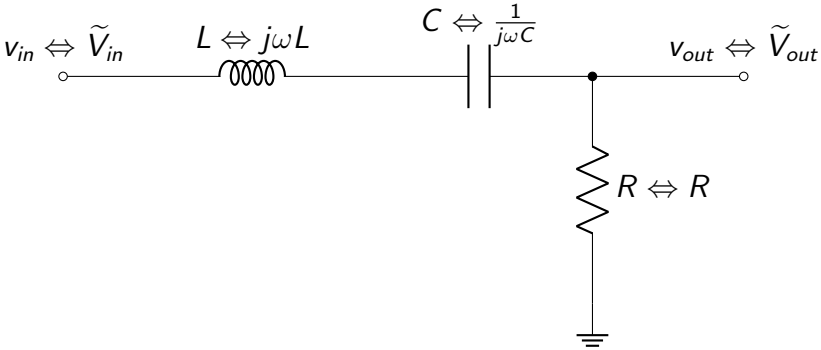

RLC Circuit in Phasor Domain

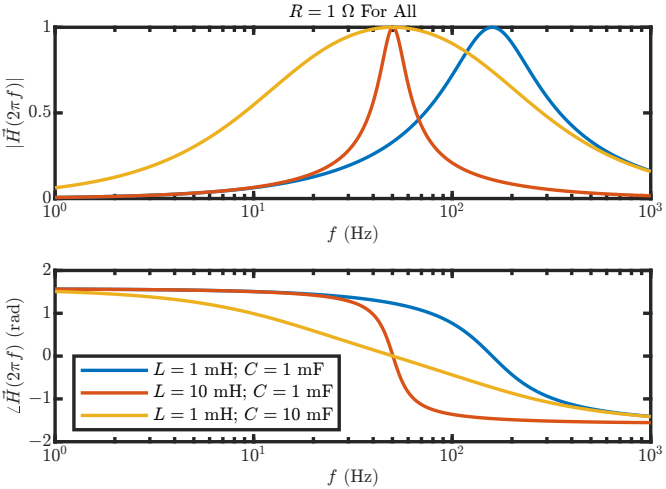

CR Circuit in Phasor Domain

CR Circuit in Phasor Domain

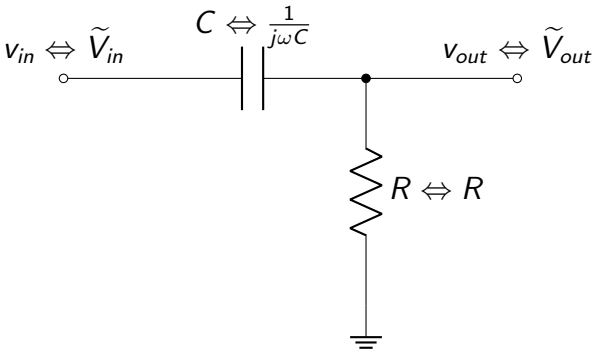

CR Circuit in Phasor Domain

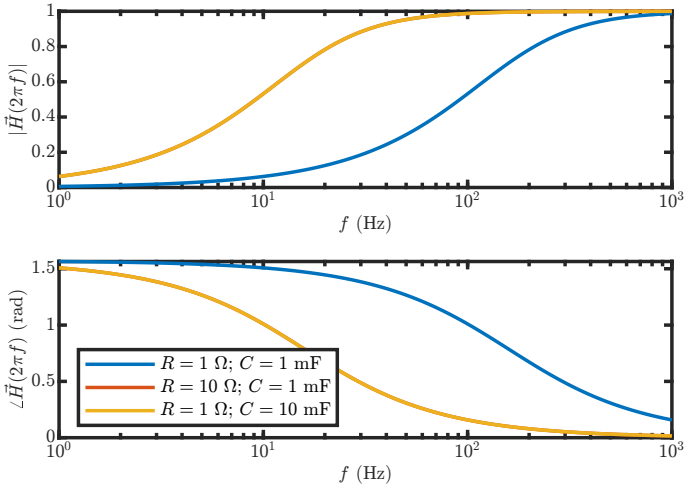

RC Circuit in Phasor Domain

RC Circuit in Phasor Domain

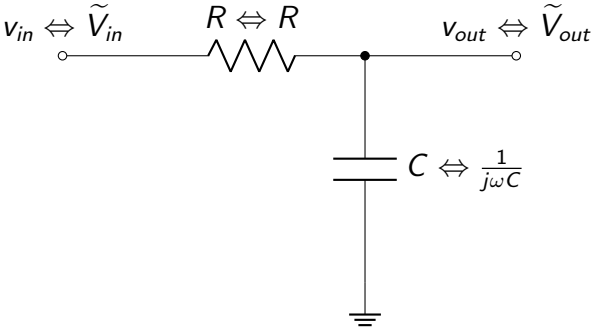

RC Circuit in Phasor Domain

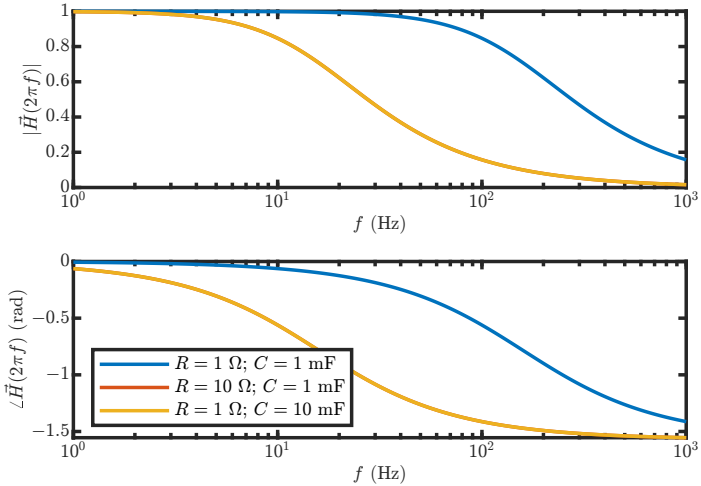

Non-Inverting Op-Amp in Phasor Domain

Non-Inverting Op-Amp in Phasor Domain

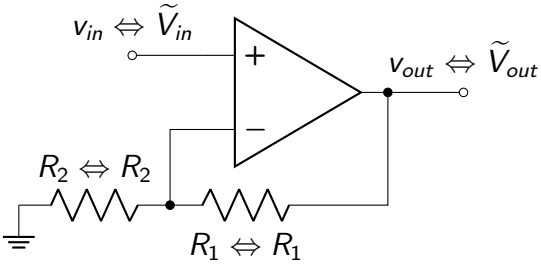

Non-Inverting Op-Amp in Phasor Domain

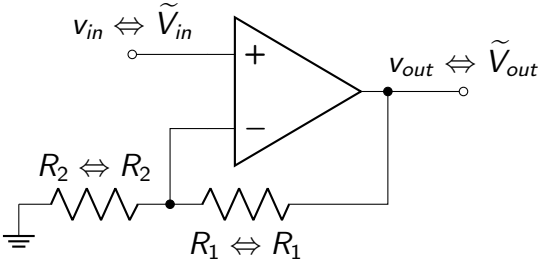

$$\therefore \frac{\widetilde{V}_{out}}{\widetilde{V}_{in}} = \frac{V_{out}}{V_{in}} = \vec{H}(\omega) = G = \frac{R_1 + R_2}{R_2}$$

Non-Inverting Op-Amp in Phasor Domain

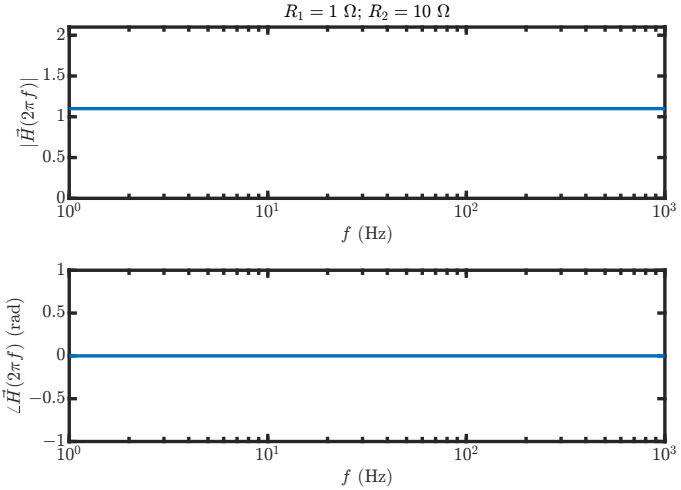

Combining Transfer Functions

CR + Non-Inverting Op-Amp + RC

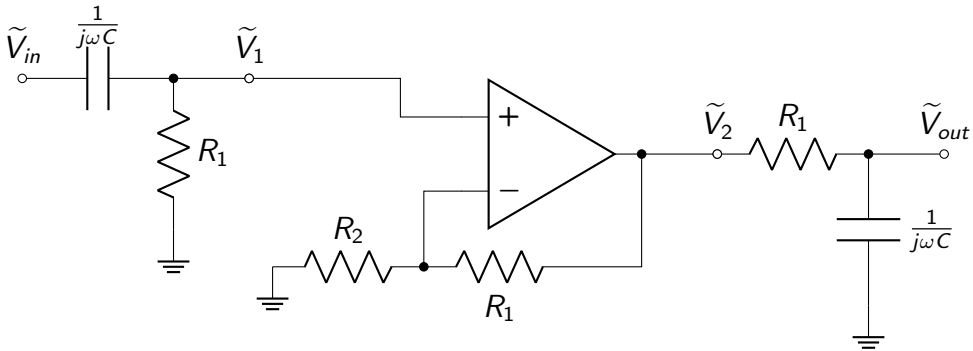

$\overrightarrow{H}_1 \rightarrow G \rightarrow \overrightarrow{H}_2$

$\vec{H}_1 \rightarrow G \rightarrow \vec{H}_2$

$$\therefore \frac{\tilde{V}_{out}}{\tilde{V}_{in}} = \vec{H}_{sys} = \vec{H}_1 G \vec{H}_2$$

This is only valid due to the configuration of the system:

- No current flows into the non-inverting input making the derivation for $\vec{H}_1$ valid
- $\tilde{V}_2$ is tied to $\tilde{V}_1$ through the op-amp (G) regardless of further connected blocks

CR + Non-Inverting Op-Amp + RC

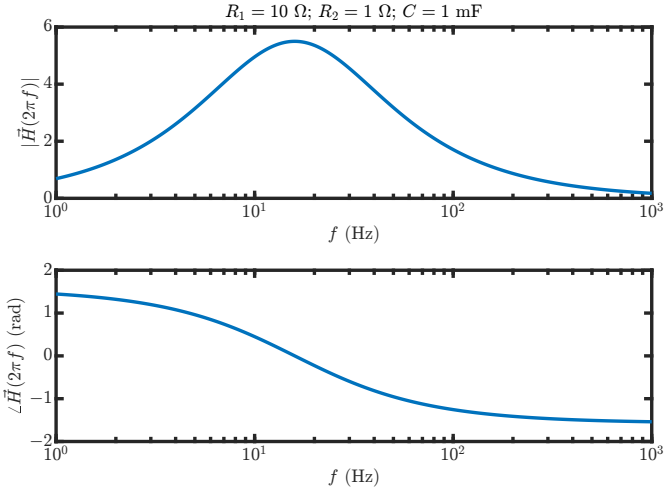

Reminders

- Recitation Friday