Wk2L1: Terminology & Ohm's Law

Giles Blaney, PhD

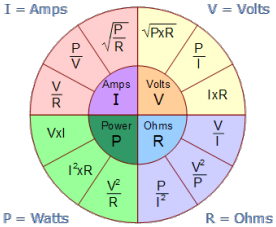

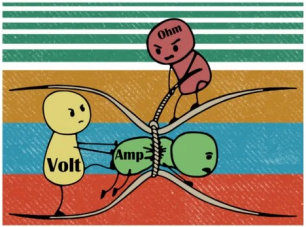

Tufts UNIVERSITY | School of Engineering

Mon. Sept. 8

Components

Sources

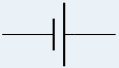

Battery

Voltage Source

Resistors

Resistor

Potentiometer

Capacitors & Inductors

Capacitor

Inductor

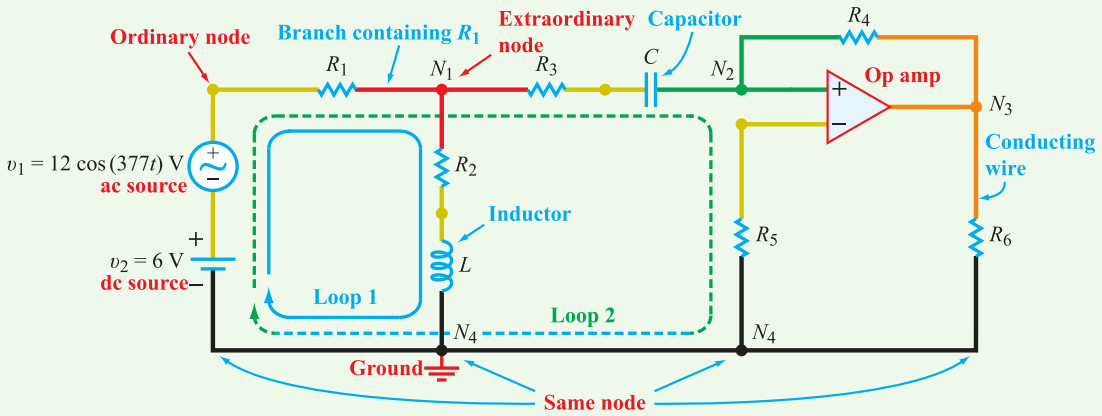

Figure 1-5: Diagram representing a circuit that contains dc and ac sources, passive elements (six resistors, one capacitor, and one inductor), and one active element (operational amplifier). Ordinary nodes are in yellow, extraordinary nodes in other colors, and the ground node in black.

Current is flow – Through a point

Current

Electric current is defined as the time rate of transfer of electric charge across a specified cross section.

$$i = \frac{dq}{dt} \qquad [\mathrm{A}] = \frac{[\mathrm{C}]}{[\mathrm{s}]}$$

Voltage is potential difference – Between two points

Voltage

The voltage v_{ab} between location **a** and location **b** is the ratio of dw to dq, where dw is the energy in joules [J] required to move (positive) charge dq from **b** to **a** (or negative charge from **a** to **b**).

$$v_{+-} = v_{ab} = \frac{dw}{dq} \qquad [\mathrm{V}] = \frac{[\mathrm{J}]}{[\mathrm{C}]}$$

Note: Voltages are commonly referenced to ground (e.g., v_a is the voltage between node **a** and ground)

Power – Consumed or delivered

Power

Power is the time rate of change of energy.

$$p = \frac{dw}{dt} \qquad [\mathrm{W}] = \frac{[\mathrm{J}]}{[\mathrm{s}]}$$

Conventions

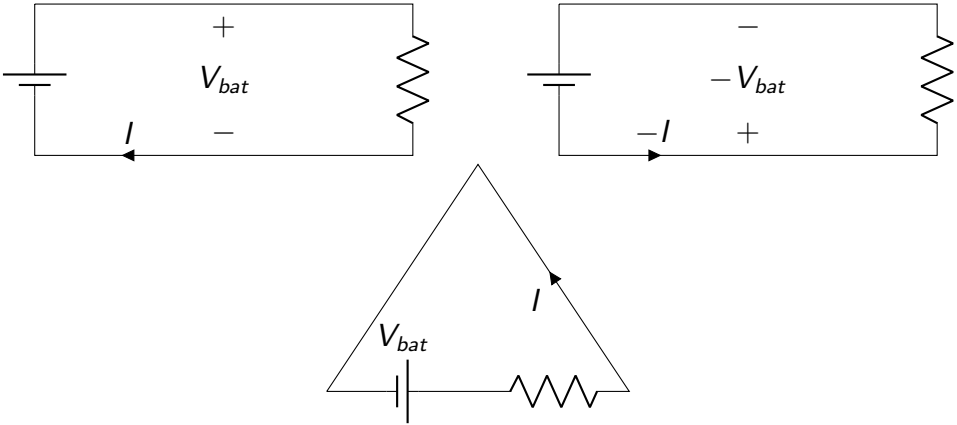

Ohm's Law

Ohm's Law

$$v = iR$$

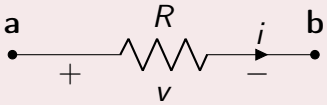

$$i = \frac{v_{ab}}{R} = \frac{v_a - v_b}{R}$$

Series

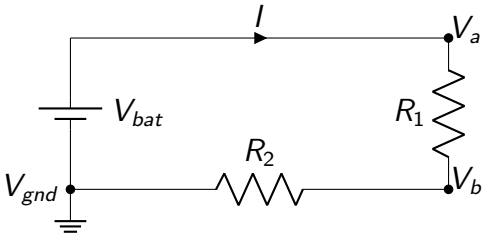

Parallel

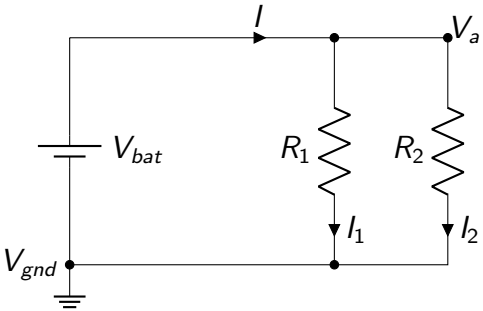

Parallel versus Series

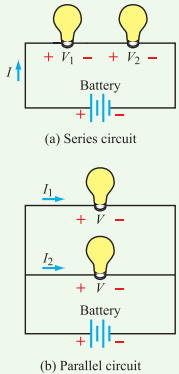

Figure 1-6: Two light bulbs connected (a) in series and (b) in parallel.

(Components need not be in either series or parallel and can be neither)

Series

$$R_{eq} = \sum_{i=1}^{N} R_i$$

Parallel

$$R_{eq} = \left(\sum_{i=1}^{N} \frac{1}{R_i} \right)^{-1}$$

Mathematical and Physical Models

Ohm's law $i = v/R$

Current $i = dq/dt$

Direction of i = direction of flow of (+) charge

Charge transfer $q(t) = \int_{-\infty}^{t} i\, dt$

$$\Delta Q = q(t_2) - q(t_1) = \int_{t_1}^{t_2} i\, dt$$

Voltage = potential energy difference per unit charge

Passive sign convention

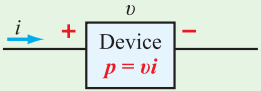

$p > 0$ power delivered to device

$p < 0$ power supplied by device

Note that i direction is defined as entering (+) side of v.

Energy $w = \int_{0}^{\infty} p(t)\, dt$

Reminders

- HW 1 is posted on canvas
- Quiz I on Wednesday
  Covers lectures Wk1L1 & Wk2L1 (this lecture)