Wk3L1: Voltage dividers & Wheatstone bridges

Giles Blaney, PhD

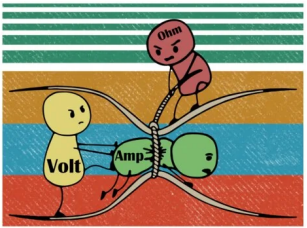

Tufts UNIVERSITY | School of Engineering

Mon. Sept. 15

Kirchhoff's current law (KCL)

- The algebraic sum of currents entering a node must always be zero.
- The algebraic sum of currents leaving a node must always be zero.
- Total currents entering a node must equal the total currents leaving.

$$\left[\sum_{k=1}^{n} i_k\right]_{node} = 0$$

Kirchhoff's voltage law (KVL)

- The algebraic sum of voltages around a closed loop must always be zero.
- Total voltage rise around a loop must equal the total voltage drop.

$$\left[\sum_{k=1}^{n} v_k\right]_{loop} = 0$$

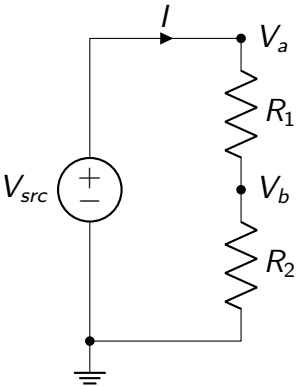
I
V_a
R_1
V_{src}
+
−
V_b
R_2

Voltage Divider

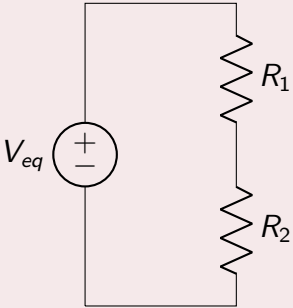

- The voltage across any individual resistor R_i (V_i) in a series group (R_{eq}) is a proportionate fraction (R_i/R_{eq}) of the voltage across the entire group (V_{eq}).

$$V_{R1} = \frac{R_1}{R_{eq}} V_{eq} = \frac{R_1}{R_1 + R_2} V_{eq}$$

$$V_{R2} = \frac{R_2}{R_{eq}} V_{eq} = \frac{R_2}{R_1 + R_2} V_{eq}$$

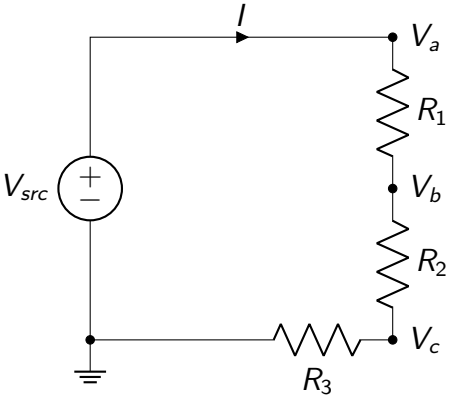
I
V_a
R_1
V_{src}
V_b
R_2
V_c
R_3

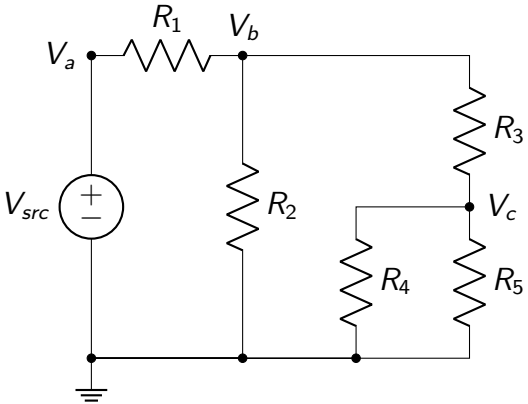
R_1
V_b
V_a
R_3
V_{src}
R_2
V_c
R_4
R_5

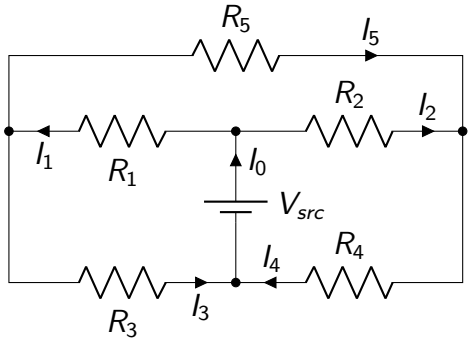
R_5
I_5
R_2
I_2
I_1
R_1
I_0
V_{src}
I_4
R_4
R_3
I_3

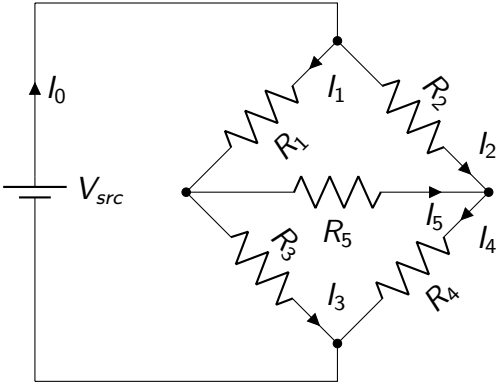
I_0
V_{src}
I_1
R_1
R_2
I_2
R_5
I_5
R_3
I_3
R_4
I_4

Purpose:

- Measure the resistance of R_4
  - A resistive sensor is typically placed at R_4

Working principle:

- Only a certain configuration of resistor values will result in balance
- Balance is when $I_5 = 0$ A
  - Same as saying: $V_b = V_c$
- Measuring the balance allows us to determine R_4

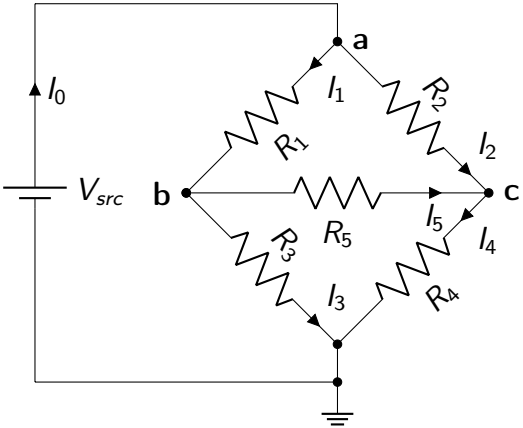

Wheatstone Bridge: Current Meter Balance

For balance (*id est*, $I_5 = 0\,\mathrm{A}$):

$$\frac{R_4}{R_3} = \frac{R_2}{R_1}$$

$$\therefore R_4 = \frac{R_2}{R_1} R_3$$

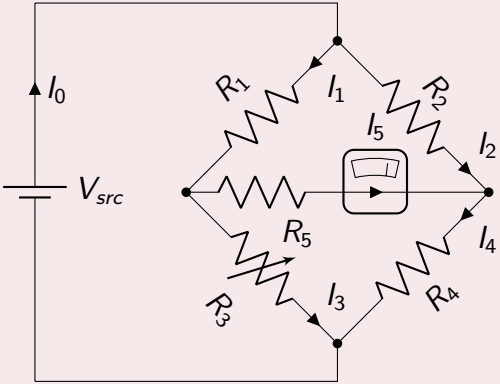

Wheatstone Bridge: Volt Meter

If $\Delta R/R << 1$:

$$V_{out} \approx \frac{V}{4}\frac{\Delta R}{R}$$

$$\therefore \Delta R \approx 4R\frac{V_{out}}{V}$$

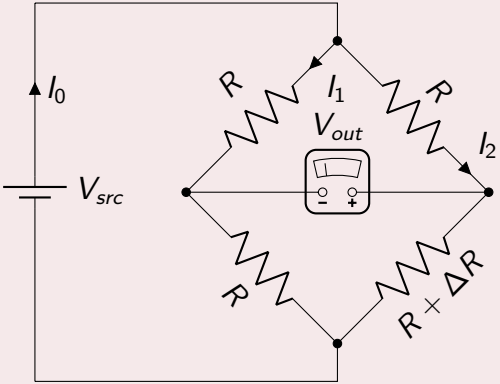

Mathematical and Physical Models

Linear resistor

$$R = \rho \ell / A$$
$$p = i^2 R$$

Kirchhoff current law (KCL)

$$\sum_{n=1}^{N} i_n = 0$$

i_n = current entering node n

Kirchhoff voltage law (KVL)

$$\sum_{n=1}^{N} v_n = 0$$

v_n = voltage across branch n

Resistor combinations

In series $\quad R_{eq} = \sum_{i=1}^{N} R_i$

In parallel $\quad \frac{1}{R_{eq}} = \sum_{i=1}^{N} \frac{1}{R_i}$

or $\quad G_{eq} = \sum_{i=1}^{N} G_i$

Voltage division

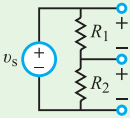

$$v_1 = \left(\frac{R_1}{R_1 + R_2}\right) v_s$$
$$v_2 = \left(\frac{R_2}{R_1 + R_2}\right) v_s$$

Current division

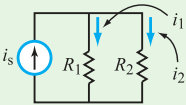

$$i_1 = \left(\frac{R_2}{R_1 + R_2}\right) i_s = \frac{G_1}{G_{eq}} i_s$$
$$i_2 = \left(\frac{R_1}{R_1 + R_2}\right) i_s = \frac{G_2}{G_{eq}} i_s$$

Source transformation

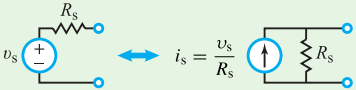

$$i_s = \frac{v_s}{R_s}$$

Y–Δ transformation Table 2-5

Wheatstone bridge (Fig. 2-37) $\quad v_{out} \approx \frac{V_0}{4}\left(\frac{\Delta R}{R}\right)$

Reminders

- HW 1 is due now
- HW 2 is posted