Wk4L1: Thévenin & Norton equivalents

Giles Blaney, PhD

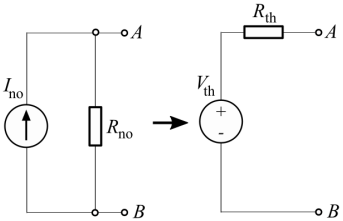

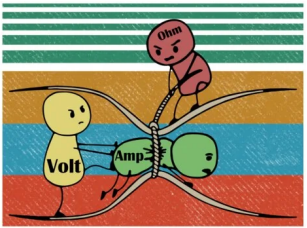

Tufts UNIVERSITY | School of Engineering

Mon. Sept. 22

Node-Voltage Procedure

1. Identify all extraordinary nodes, set one as a reference node (ground), and then assign node voltages to the remaining extraordinary nodes ($V_{N,1}$, $V_{N,2}$, ..., $V_{N,n_{ex}-1}$).
2. At each of the $(n_{ex} - 1)$ extraordinary nodes, apply KCL.
3. Solve the $(n_{ex} - 1)$ independent simultaneous equations.
   1. Rewrite each current (I_k) in the system of equations in terms of node voltages and resistances according to Ohm's Law ($\Delta V_k/R_k = (V_{N,2} - V_{N,1})/R_k$; where R_k is between nodes 1 and 2 and I_k flows from node 2 to 1).
   2. Rearrange and solve the system of equations for the node voltages (V_Ns).

Mesh-Current Procedure

1. Identify all meshes and assign each of them an unknown mesh current ($I_{M,1}$, $I_{M,2}$, ..., $I_{M,n_{msh}}$).
2. At each mesh, apply KVL.
3. Solve the independent simultaneous equations.
   1. Rewrite each voltage (ΔV_k) in the system of equations in terms of mesh currents and resistances according to Ohm's Law ($I_{M,1}R_k$; where ΔV_k is the voltage across R_k and $I_{M,1}$ flows from high to low potential through R_k.
   2. Rearrange and solve the system of equations for the mesh currents (I_Ms).

Thévenin Equivalent

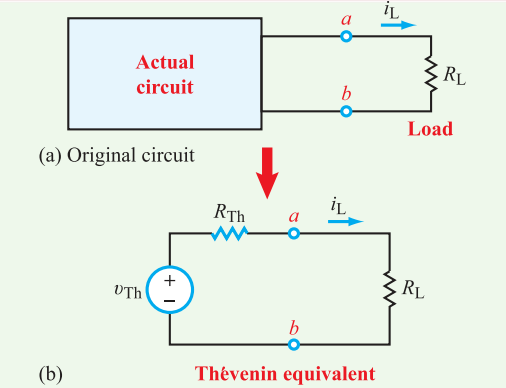

Figure 3-20: A circuit can be represented in terms of a Thévenin equivalent comprising a voltage source v_{Th} in series with a resistance R_{Th}.

Open / Short Method

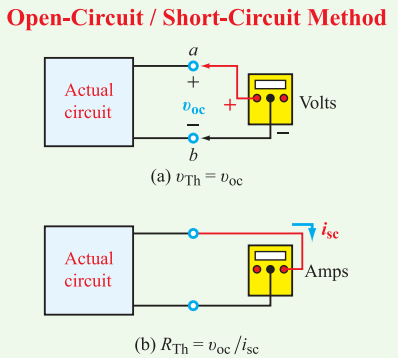

Figure 3-22: Thévenin voltage is equal to the open-circuit voltage and Thévenin resistance is equal to the ratio of v_{oc} to i_{sc}, where i_{sc} is the short-circuit current between the output terminals.

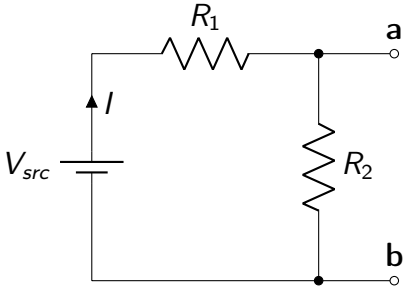
R_1
a
I
V_{src}
R_2
b

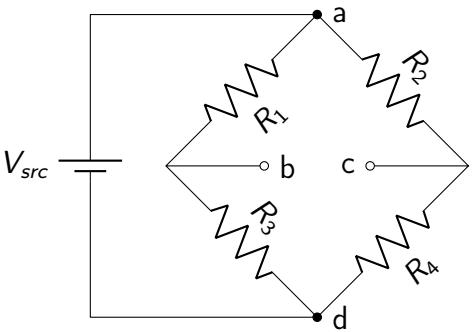

Where:

$R_1 = R_2 = R_3 = 100\,\Omega$

$R_4 = 10\,\Omega$ and $V_{src} = 10\,\text{V}$

Norton Equivalent

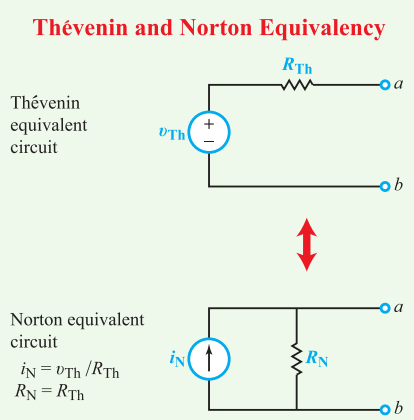

Figure 3-28: Equivalence between Thévenin and Norton equivalent circuits, consistent with the source transformation method of Section 2-3.4.

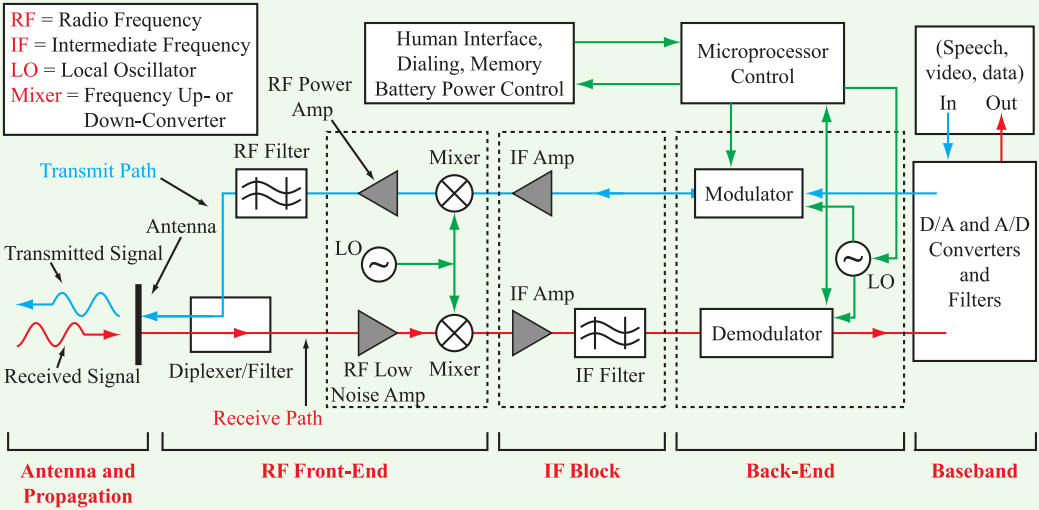

Figure 3-17: Cell-phone block diagram.

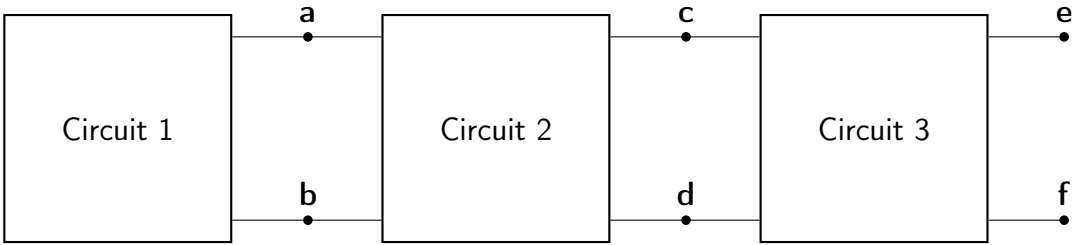
a
c
e
Circuit 1
Circuit 2
Circuit 3
b
d
f

- R_{Th} (and R_N, since they are the same) is the output resistance (R_S)
- If the **input resistance** (R_L) is much higher than the **output resistance** (R_S) when connecting circuit blocks, the connection will not affect the circuits within each block much. E.g.:
  - An ideal **voltmeter has an input resistance of ∞**, so it does not influence the circuits it probes
  - An ideal **ammeter has an input resistance of 0**, so it greatly influences the circuits it probes

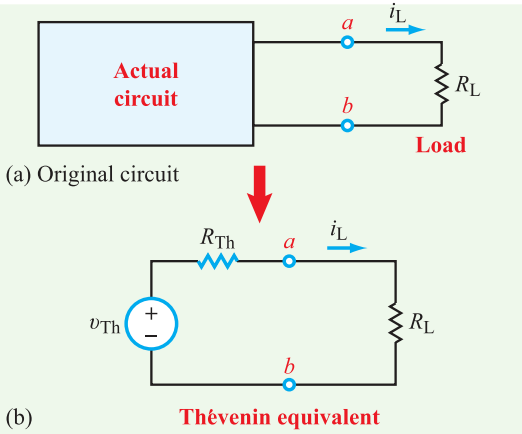

Figure 3-20: A circuit can be represented in terms of a Thévenin equivalent comprising a voltage source v_{Th} in series with a resistance R_{Th}.

- Consider some actual circuit which is delivering power to a load (R_L)
- The actual circuit will have a Thévenin equivalent (v_{Th} and R_{Th})
- The **power delivered** by the actual circuit to the load **will depend on R_L and R_{Th}**

Power Transfer

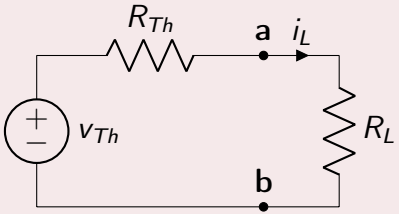

$$i_L = \frac{v_{Th}}{R_{Th} + R_L}; \quad v_L = \frac{R_L}{R_{Th} + R_L} v_{Th}$$

$$p_L = i_L v_L = \frac{v_{Th}^2 R_L}{(R_{Th} + R_L)^2}$$

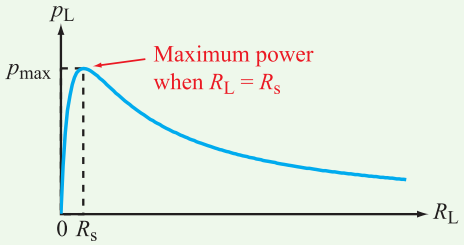

Figure 3-31: Variation of power p_L dissipated in the load R_L, as a function of R_L.

- Maximum current transfer ($R_L = 0$)

$$i_{max} = \frac{v_{Th}}{R_{Th}}$$

- Maximum voltage transfer ($R_L = \infty$)

$$v_{max} = v_{Th}$$

- **Maximum power transfer ($R_L = R_{Th}$)**

$$p_{max} = \frac{v_{Th}^2}{4R_{Th}}$$

Referred to as "matching the source and the load"

Mathematical and Physical Models

Node-voltage method

$\sum$ of all current leaving a node $= 0$
[current entering a node is $(-)$]

Mesh-current method

$\sum$ of all voltages around a loop $= 0$
[passive sign convention applied to mesh currents in clockwise direction]

Nodal analysis by inspection $\mathbf{GV} = \mathbf{I}_t$

Mesh analysis by inspection $\mathbf{RI} = \mathbf{V}_t$

Thévenin equivalent circuit

$$v_{Th} = v_{oc}$$
$$R_{Th} = v_{oc}/i_{sc}$$

Norton equivalent circuit

$$i_N = i_{sc}$$
$$R_N = R_{Th}$$

Maximum power transfer

$$R_L = R_s$$
$$p_{max} = \frac{v_s^2}{4R_L}$$

Reminders

- HW 2 due now
- HW 3 posted on Canvas
- Quiz II on Wednesday (bring calculator)