Wk5L1: Resistive Op-Amps

Giles Blaney, PhD

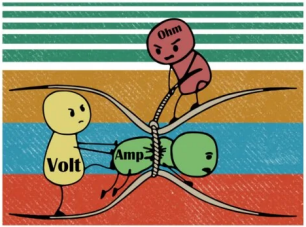

Tufts UNIVERSITY | School of Engineering

Mon. Sep. 29

Ideal Op-Amps

For an **ideal** op-amp:

- Open loop gain $A \to \infty$
- Input resistance $R_i \to \infty\ \Omega$
- Output resistance $R_o \to 0\ \Omega$

Ideal Op-Amp Constraints

$$v_p = v_n$$

$$i_p = i_n = 0$$

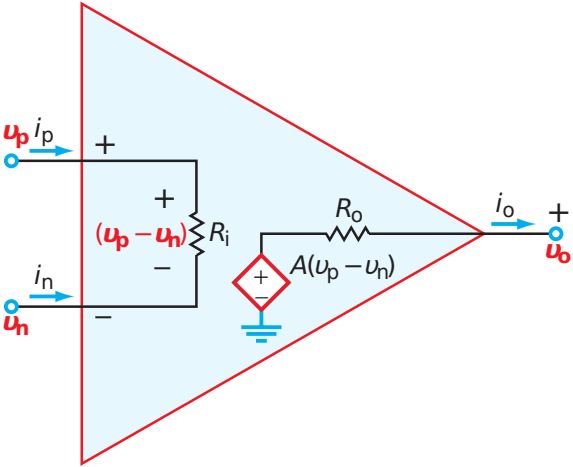

- Analyzed by voltage division at v_n
- Infinite input resistance
- Gain does not depend on previous block's output resistance (R_s)
- Gain must be ≥ 1

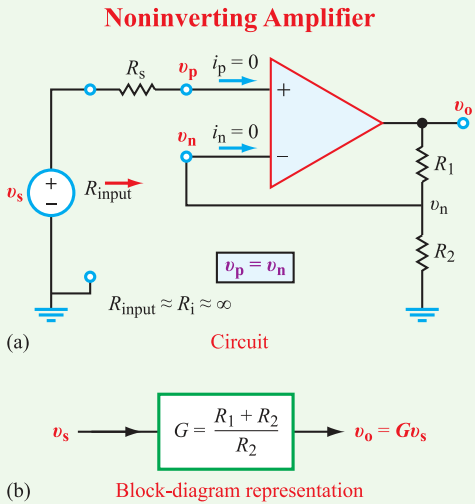

Figure 4-10: Noninverting amplifier circuit: (a) using ideal op-amp model and (b) equivalent block-diagram representation.

- Analyzed by KCL and Ohm's law at v_n
- Input resistance is previous block's output resistance (R_s)
- Gain does depend on previous block's output resistance (R_s)
- Gain must be negative

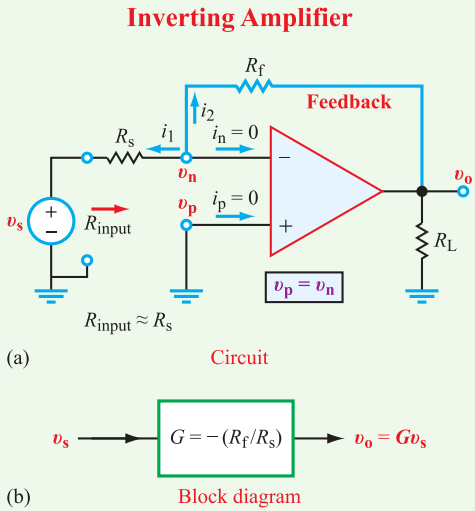

Figure 4-11: Inverting amplifier circuit and its block-diagram equivalent.

- Analyzed by current source transformation (Thévenin to Norton)
- Conceptually equivalent to multiple inverting amplifiers added together

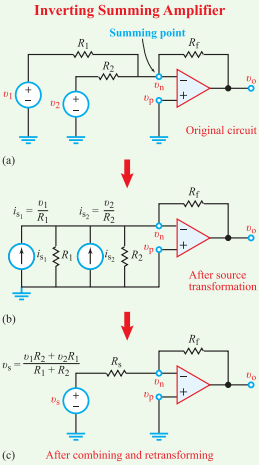

Figure 4-13: Inverting summing amplifier.

- Analyzed by voltage division at both v_n and v_p
- Conceptually equivalent to multiple non-inverting amplifiers added together

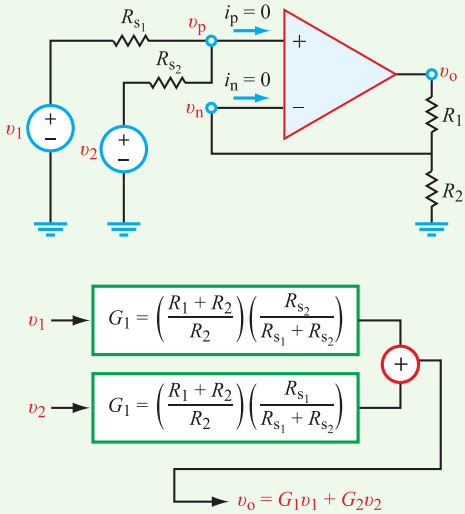

Figure 4-15: Noninverting summer.

- Analyzed by KCL and Ohm's law at both v_n and v_p
- Conceptually equivalent to a non-inverting and a inverting amplifiers added together

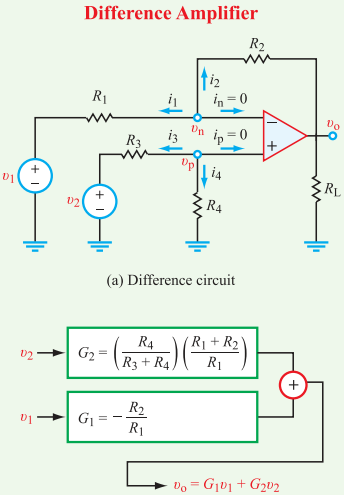

Figure 4-16: Difference-amplifier circuit.

- Important to control input and output resistances
- v_s does not see the load (R_L)

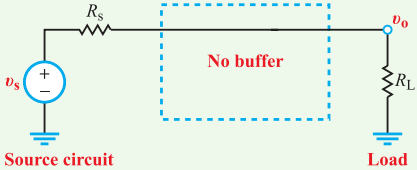

(a) Source circuit connected directly to a load

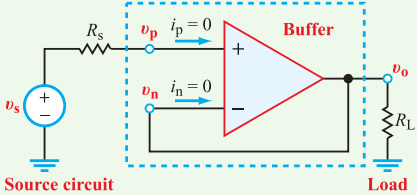

(b) Source circuit separated by a buffer

Figure 4-17: The voltage follower provides no voltage gain ($v_o = v_s$), but it insulates the input circuit from the load.

Instrumentation Amplifier

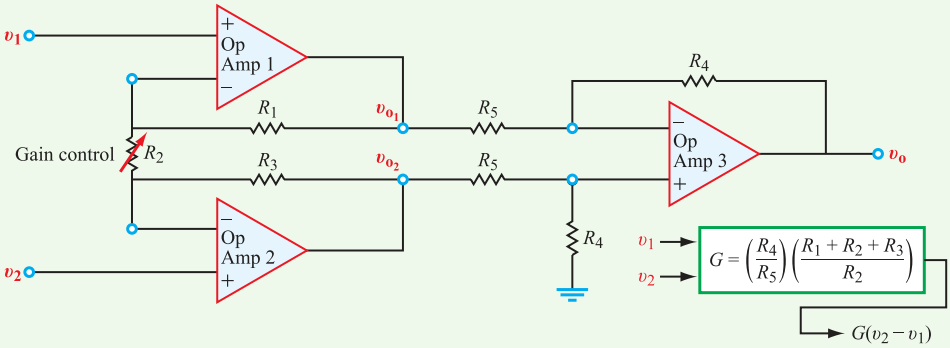

Figure 4-23: Instrumentation-amplifier circuit.

If $R_1 = R_3 = R_4 = R_5 = R$ then:

$$v_0 = \left(1 + \frac{2R}{R_2}\right)(v_2 - v_1)$$

Mathematical and Physical Models

Ideal op amp
$$v_p = v_n$$
$$i_p = i_n = 0$$

Noninverting amp*
$$G = \frac{v_o}{v_s} = \frac{R_1 + R_2}{R_2}$$

Inverting amp*
$$G = \frac{v_o}{v_s} = -\left(\frac{R_f}{R_s}\right)$$

Summing amp*
$$v_o = -R_f\left(\frac{v_1}{R_1} + \frac{v_2}{R_2}\right)$$

Difference amp*
$$v_o = G_2 v_2 + G_1 v_2$$

Voltage follower*
$$v_o = v_s$$

Instrumentation amp
$$v_o = \left(1 + \frac{2R}{R_2}\right)(v_2 - v_1)$$
(with gain-control resistor R_2)

MOSFET
$$V_{out} = V_{DD} - g R_D V_{in}$$

*See Table 4-3.

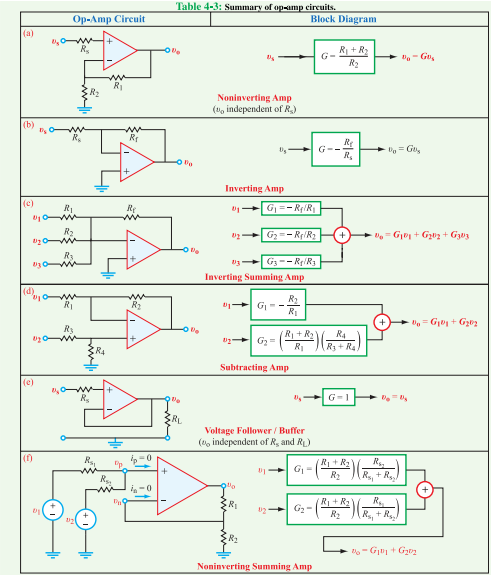

Reminders

- Demo Monday
- HW 4 Posted
- Midterm next Wednesday (Oct. 8th)